DG-FDT FLOW DIVIDER / COMBINER VALVE, SPOOL TYPE

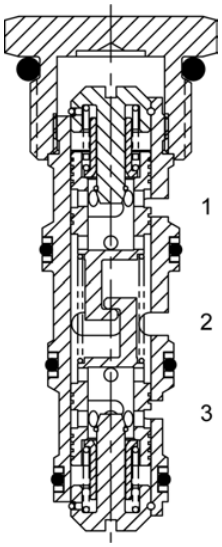

DESCRIPTION

10 size, 7/8-14 thread “Delta Series”, spool type, flow divider/combiner, positive traction valve.

OPERATION

In the dividing mode, the DG-FDT will divert input flow from port (2) to ports (3) and (1), based on the ratio specified, regardless of operating pressure. The DG-FDT will combine input flows from ports (3) and (1). Should circuit operation result in a blockage of either (3) or (1), the opposite port may also close under certain conditions. Should this potential exist, consult the factory.

FEATURES

- Hardened parts for long life.
- Industry common cavity.

DO NOT EXCEED MAXIMUM FLOW PER MODEL
Use where wheel slip (or “drag”) needs to be accomplished.

TRACTION FLOW W/1 LEG UNLOADED
2-3 GPM valve - 0.4 GPM
3-6 GPM valve - 0.7 GPM
6-9 GPM valve - 1.1 GPM
9-12 GPM valve - 1.5 GPM

HYDRAULIC SYMBOL

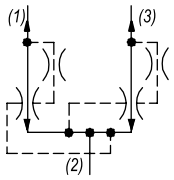

VALVE SPECIFICATIONS

Maximum Flow	12 GPM (45 LPM)
Accuracy on Flow Splits	±10% of Max Rated Inlet Flow
Maximum Operating Pressure	3500 PSI (241 bar)
Viscosity Range	36 to 3000 SSU (3 to 647 cSt)
Filtration	ISO 18/16/13
Media Operating Temp. Range	-40° to 250°F (-40° to 120°C)
Weight	.22 lbs (.10 kg)
Operating Fluid Media	General Purpose Hydraulic Fluid
Cartridge Torque Requirements	30 ft-lbs (40.6 Nm)
Cavity	DELTA 4W
Cavity Form Tool (Finishing)	40500002
Seal Kit	21191214

PERFORMANCE

Actual Test Data (Cartridge Only)

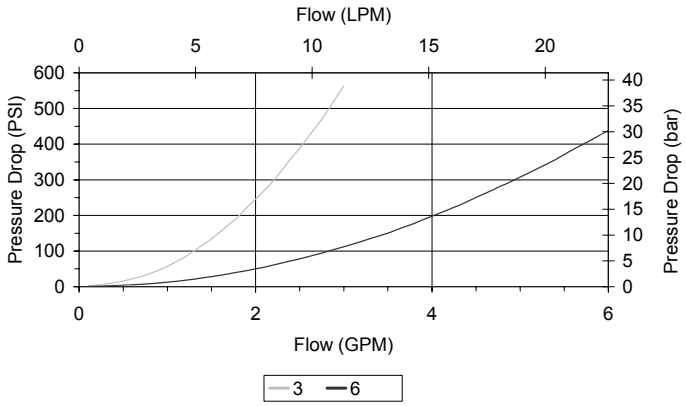

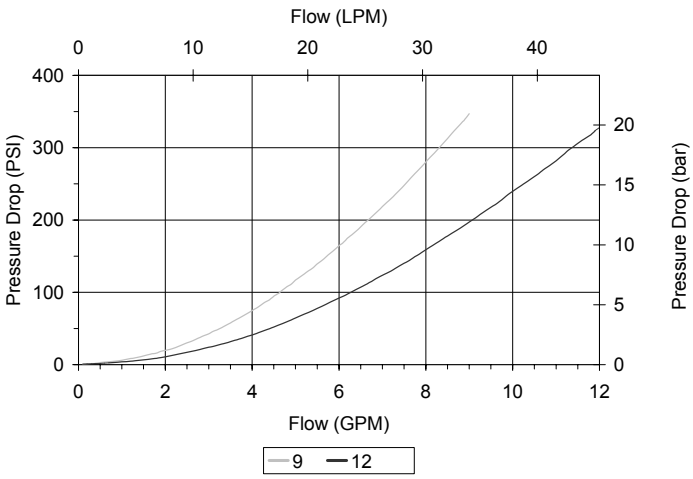

WARNING: *the specifications/application data shown in our catalogs and data sheets are intended only as a general guide for the product described (herein). Any specific application should not be undertaken without independent study, evaluation, and testing for suitability.*

Via Malavolti, 36 - 41122 Modena - ITALY - Phone +39 (059) 254895 - Fax +39 (059) 253512 - mail: tecnord@tecnord.com - **www.tecnord.com**

DIMENSIONS

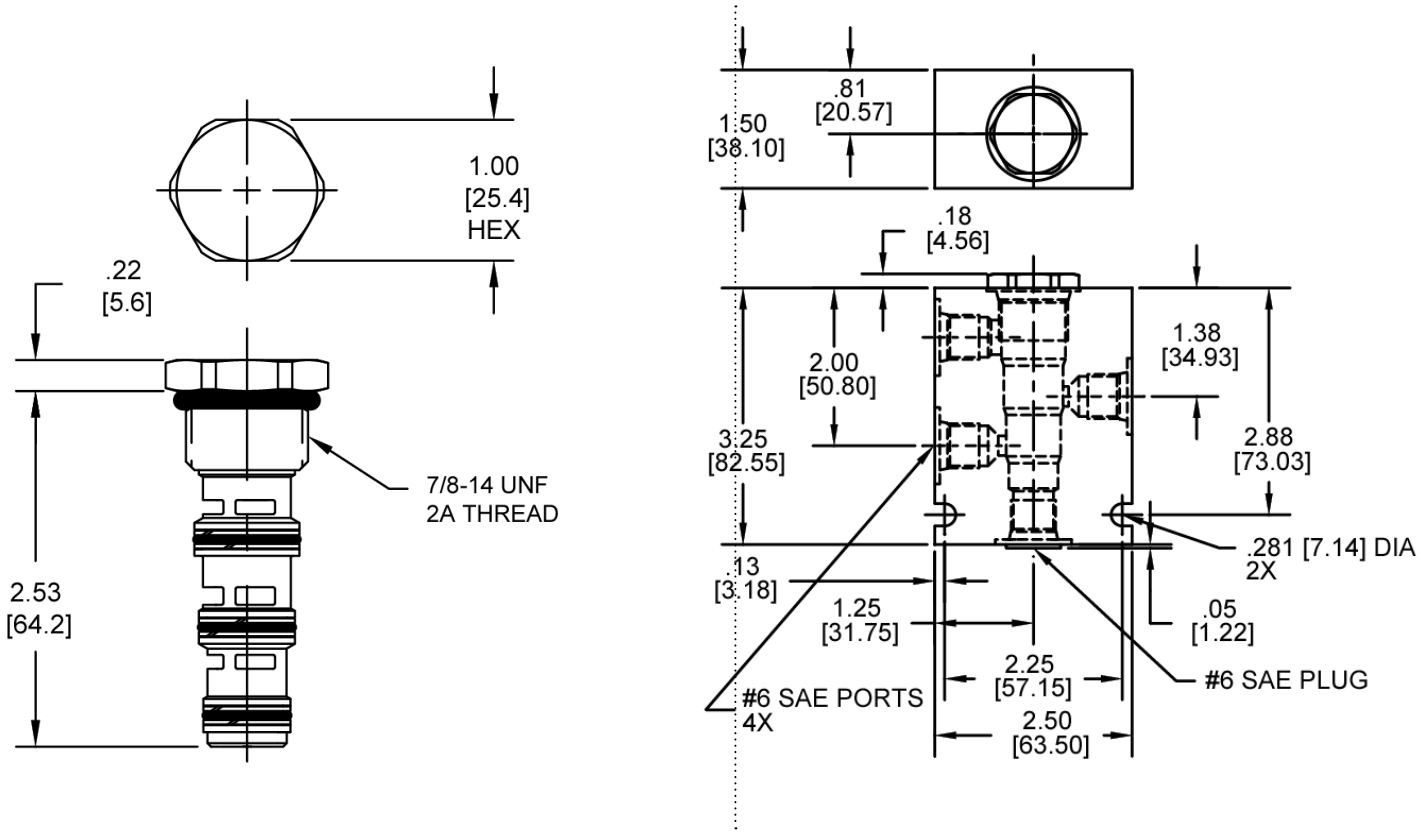

Body Weight: .99 lbs (.45 kg)

ORDERING INFORMATION

DG-FDT – ____ – ____ – ____ – ____

OPTIONS
Buna Standard **00**
Viton Standard **V0**

SPLITS
50-50 **50**
Consult factory for splits other then 50-50

INLET FLOW
03 2-3 GPM
06 3-6 GPM
09 6-9 GPM
12 9-12 GPM

BODIES
Blank Without Body
N 1/4" NPT Ports
S #6 SAE Ports
Note: must use 4-way body

WARNING: *the specifications/application data shown in our catalogs and data sheets are intended only as a general guide for the product described (herein). Any specific application should not be undertaken without independent study, evaluation, and testing for suitability.*

Via Malavolti, 36 - 41122 Modena - ITALY - Phone +39 (059) 254895 - Fax +39 (059) 253512 - mail: tecnord@tecnord.com - **www.tecnord.com**