DF-PWI SEQUENCE VALVE, INTERNAL PILOT AND DRAIN

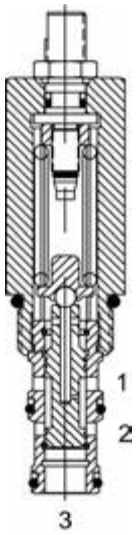

DESCRIPTION

10 size, 7/8-14 thread, “Delta” series, internal pilot and drain, sequence valve.

OPERATION

The DF-PWI blocks flow at (3) and allows flow from (2) to (1). On attainment of a predetermined pressure at (3) the valve shifts to a allow flow from (3) to (2) and block flow at (1).

FEATURES

- Hardened parts for long life.
- Optional spring ranges to 1500 PSI (103 bar).
- Industry common Cavity.

HYDRAULIC SYMBOL

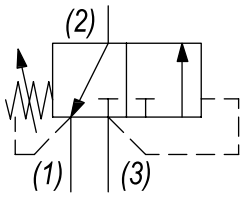

PERFORMANCE

Actual Test Data (Cartridge Only)

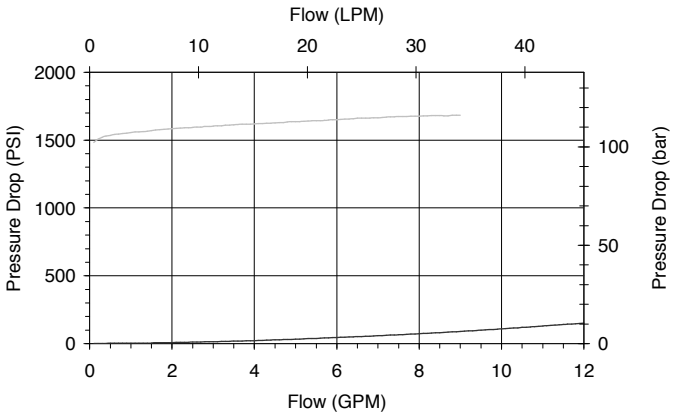

VALVE SPECIFICATIONS

Nominal Flow	8 GPM (30 LPM)
Rated Operating Pressure	3000 PSI (207 bar)
Typical Internal Leakage (150 SSU)	5 cu in/min (82 ml/min)
Viscosity Range	36 to 3000 SSU (3 to 647 cSt)
Filtration	ISO 18/16/13
Media Operating Temp. Range	-40° to 250°F (-40° to 120°C)
Weight	.57 lbs (.26 kg)
Operating Fluid Media	General Purpose Hydraulic Fluid
Cartridge Torque Requirements	30 ft-lbs (40.6 Nm)
Cavity	DELTA 3W
Cavity Form Tool (Finishing)	40500001
Seal Kit	21191206

WARNING: *the specifications/application data shown in our catalogs and data sheets are intended only as a general guide for the product described (herein). Any specific application should not be undertaken without independent study, evaluation, and testing for suitability.*

Via Malavolti, 36 - 41122 Modena - ITALY - Phone +39 (059) 254895 - Fax +39 (059) 253512 - mail: tecnord@tecnord.com - **www.tecnord.com**

DIMENSIONS

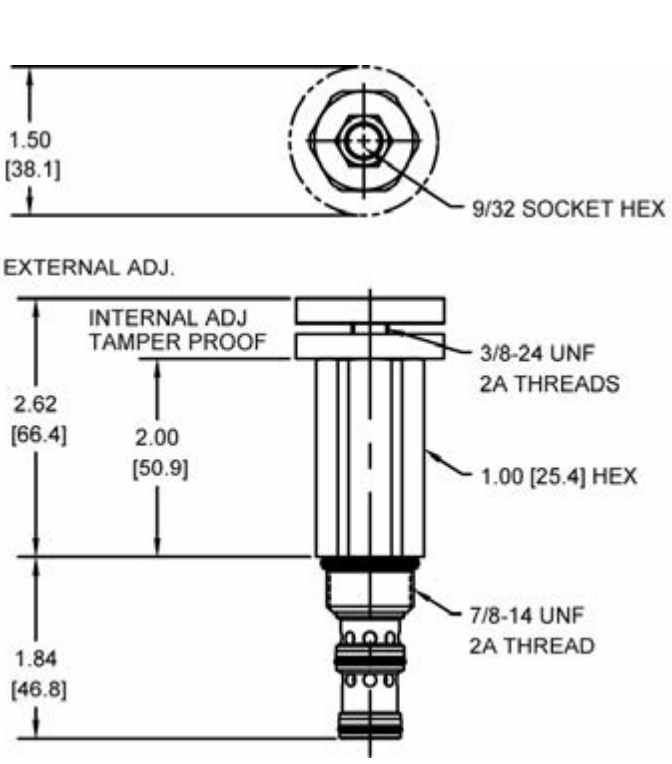

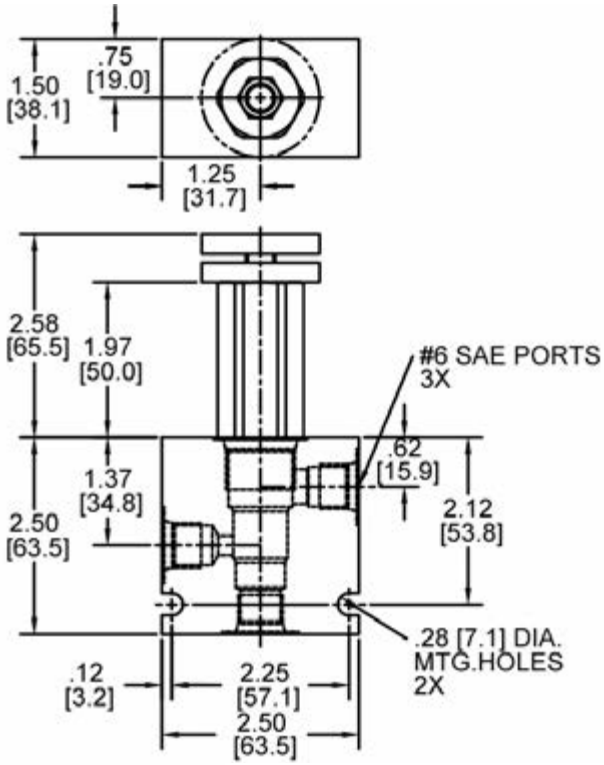

Body Weight: .76 lbs (.35 kg)

ORDERING INFORMATION

DF-PWI – ____ – ____ – ____

OPTIONS

Buna Standard	**00**
Viton Standard	**V0**
Buna, Knob	**0K**
Viton, Knob	**VK**
Buna, Internal Adjust	**0I**
Viton, Internal Adjust	**VI**
Buna, Tamper Proof	**0T**
Viton, Tamper Proof	**VT**

PRESSURE RANGE

0425	50-425 PSI
1500	425-1500 PSI

Tamper Proof
Fill in 4 Digit Pressure Setting
Example: 0500 - 500 PSI

BODIES

Blank	Without Body
N	1/4" NPTF Ports
S	#6 SAE Ports

WARNING: *the specifications/application data shown in our catalogs and data sheets are intended only as a general guide for the product described (herein). Any specific application should not be undertaken without independent study, evaluation, and testing for suitability.*

Via Malavolti, 36 - 41122 Modena - ITALY - Phone +39 (059) 254895 - Fax +39 (059) 253512 - mail: tecnord@tecnord.com - **www.tecnord.com**