# MECHANICAL DIRECTIONAL CONTROLS

Section / Description page

**DIRECT ACTING CHECK VALVES** ..... MD3

**PILOT TO OPEN AND DOUBLE PO CHECK VALVES** ..... MD37

**MANUAL VALVES** ..... MD55

**PILOT TO SHIFT VALVES** ..... MD77

**SHUTTLE VALVES** ..... MD95

**ROTARY VALVES** ..... MD105

**WARNING:** *the specifications/application data shown in our catalogs and data sheets are intended only as a general guide for the product described (herein). Any specific application should not be undertaken without independent study, evaluation, and testing for suitability.*



Via Malavolti, 36 - 41122 Modena - ITALY - Phone +39 (059) 254895 - Fax +39 (059) 253512 - mail: tecnord@tecnord.com - **www.tecnord.com**

**WARNING:** *the specifications/application data shown in our catalogs and data sheets are intended only as a general guide for the product described (herein). Any specific application should not be undertaken without independent study, evaluation, and testing for suitability.*



Via Malavolti, 36 - 41122 Modena - ITALY - Phone +39 (059) 254895 - Fax +39 (059) 253512 - mail: tecnord@tecnord.com - **www.tecnord.com**

## DIRECT ACTING CHECK VALVES

| | GPM | PSI | LPM | BAR | CAVITY | MODEL | PAGE |
|---|---|---|---|---|---|---|---|
| | 8 | 3000 | 30 | 207 | 5/8-18 | **IM-CVA** | MD4 |
| | 5 | 3500 | 19 | 241 | 5/8-18 | **MA-CVA** | MD6 |
| | 10 | 4350 | 38 | 300 | 3/4-16 | **HB-CVA** | MD8 |
| | 15 | 3500 | 57 | 241 | 7/8-14 | **DE-CVA** | MD10 |
| | 15 | 5000 | 57 | 345 | 7/8-14 | **HE-CVA** | MD12 |
| | 35 | 5000 | 132 | 345 | 1 1/16-12 | **HT-CVA** | MD14 |
| | 40 | 3500 | 151 | 241 | 1 5/16-12 | **SJ-CVA** | MD16 |
| | 10 | 3500 | 38 | 241 | 7/8-14 | **DE-CVB** | MD18 |
| | 10 | 3500 | 38 | 241 | 3/4-16 | **PB-CVC** | MD20 |
| | 8 | 3500 | 30 | 241 | 7/8-14 | **DE-CVC** | MD22 |
| 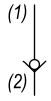 | 1 | 3500 | 4 | 241 | Special | **QS-CVL** | MD24 |
| SOFT SEAT | 2.5 | 1500 | 9.5 | 103 | 5/8-18 | **MA-CVS** | MD26 |
| | 5 | 3500 | 19 | 241 | 3/4-16 | **PB-CVS** | MD28 |
| | 10 | 1000 | 38 | 70 | 7/8-14 | **DE-CVS** | MD30 |
| | 15 | 3500 | 57 | 241 | 7/8-14 | **DE-CVR** | MD32 |
| | 35 | 5000 | 132 | 345 | 1 1/16-12 | **HT-CVR** | MD34 |

## TYPICAL SCHEMATIC

Typical application for the CVA, CVB, CVC, CVR, and CVS is load holding in a lift, check, or dump circuit.

CVA-CVB-CVC-CVS

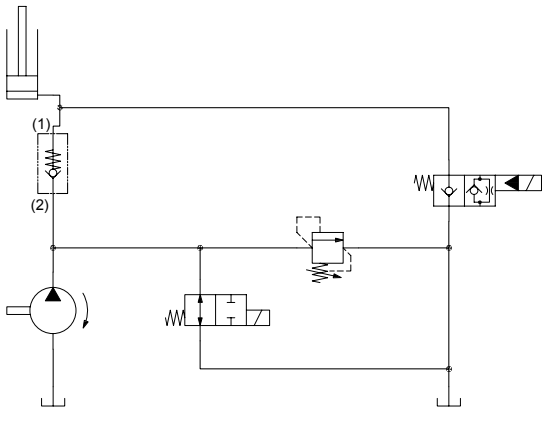


CVR

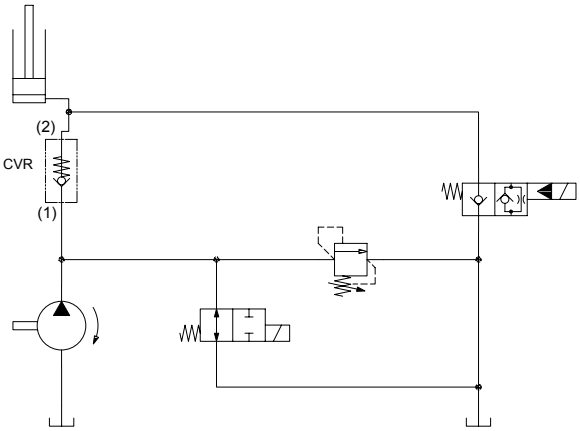


**WARNING:** *the specifications/application data shown in our catalogs and data sheets are intended only as a general guide for the product described (herein). Any specific application should not be undertaken without independent study, evaluation, and testing for suitability.*



Via Malavolti, 36 - 41122 Modena - ITALY - Phone +39 (059) 254895 - Fax +39 (059) 253512 - mail: tecnord@tecnord.com - **www.tecnord.com**

## IM-CVA INLINE CHECK VALVE

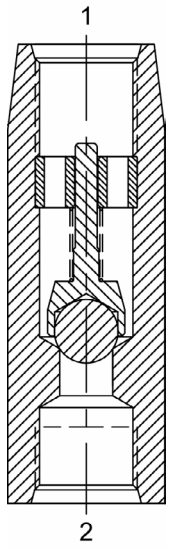


### DESCRIPTION

#8 SAE, inline check valve.

### OPERATION

The IM-CVA allows flow from (2) to (1), while normally blocking oil flow from (1) to (2). The valve has a guided check ball, which is spring-biased closed until sufficient pressure is applied at (2) to open to (1).

### HYDRAULIC SYMBOL

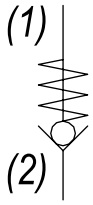


### PERFORMANCE

Actual Test Data (Cartridge Only)

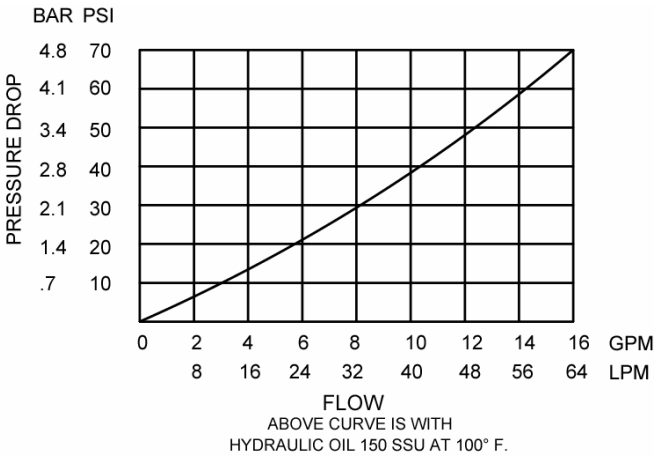


### VALVE SPECIFICATIONS

| | |
|---|---|
| Nominal Flow | 8 GPM (30 LPM) |
| Rated Operating Pressure | 3000 PSI (207 bar) |
| Typical Internal Leakage (150 SSU) | 0-5 drops/min |
| Viscosity Range | 36 to 3000 SSU (3 to 647 cSt) |
| Filtration | ISO 18/16/13 |
| Media Operating Temp. Range | -40° to 250°F (-40° to 120°C) |
| Weight | .53 lbs (.24 kg) |
| Operating Fluid Media | General Purpose Hydraulic Fluid |

**WARNING:** *the specifications/application data shown in our catalogs and data sheets are intended only as a general guide for the product described (herein). Any specific application should not be undertaken without independent study, evaluation, and testing for suitability.*



Via Malavolti, 36 - 41122 Modena - ITALY - Phone +39 (059) 254895 - Fax +39 (059) 253512 - mail: tecnord@tecnord.com - **www.tecnord.com**

## DIMENSIONS

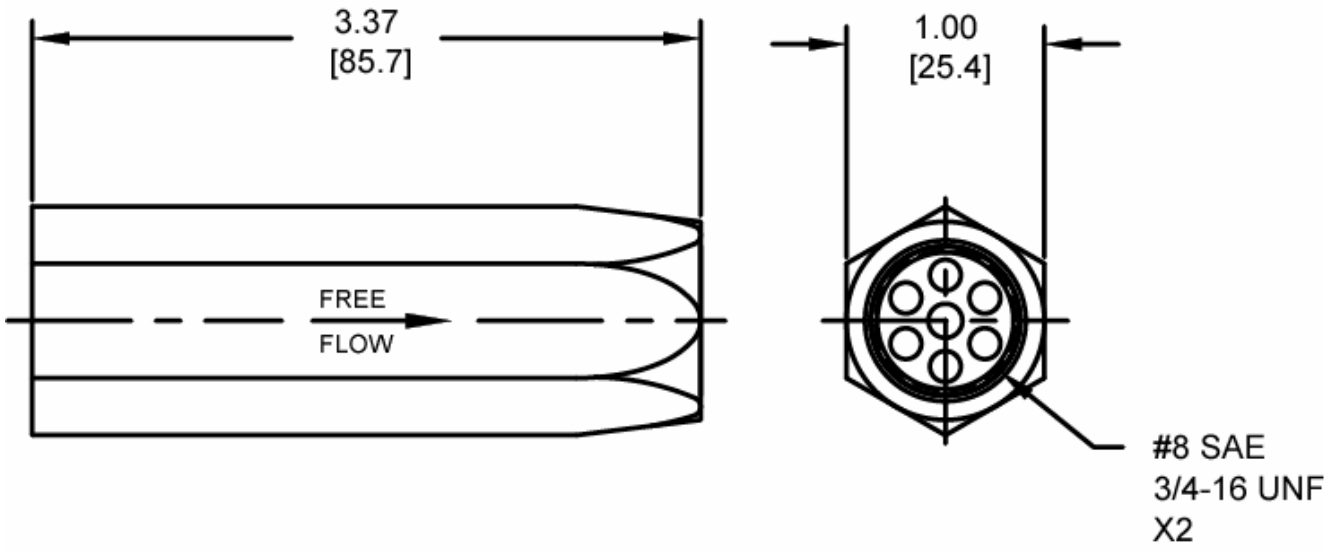


## ORDERING INFORMATION

**IM-CVA – _____ – _____**

| OPTIONS | | CRACK PRESSURE | |
|---|---|---|---|
| Buna Standard | **00** | **0005** | 5 PSI |
| | | **0025** | 25 PSI |
| | | **0050** | 50 PSI |
| | | **0075** | 75 PSI |

**WARNING:** *the specifications/application data shown in our catalogs and data sheets are intended only as a general guide for the product described (herein). Any specific application should not be undertaken without independent study, evaluation, and testing for suitability.*



Via Malavolti, 36 - 41122 Modena - ITALY - Phone +39 (059) 254895 - Fax +39 (059) 253512 - mail: tecnord@tecnord.com - **www.tecnord.com**

## MA-CVA DIRECT ACTING CHECK VALVE, POPPET

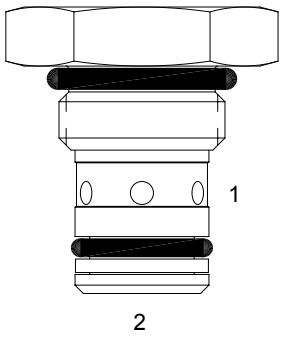


### DESCRIPTION

7 size, 5/8-18 thread, “Mini” series, direct acting check valve.

### OPERATION

The MA-CVA allows flow passage from (2) to (1), while normally blocking oil flow from (1) to (2). The cartridge has a fully guided poppet, which is spring-biased closed, until sufficient pressure is applied at (2) to open to (1).

### FEATURES

- Hardened parts for long life and low leakage.
- Optional bias springs for backpressure application flexibility.
- Fully guided poppet.
- Industry common cavity.

### HYDRAULIC SYMBOL

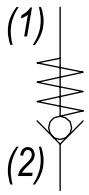


### PERFORMANCE

Actual Test Data (Cartridge Only)

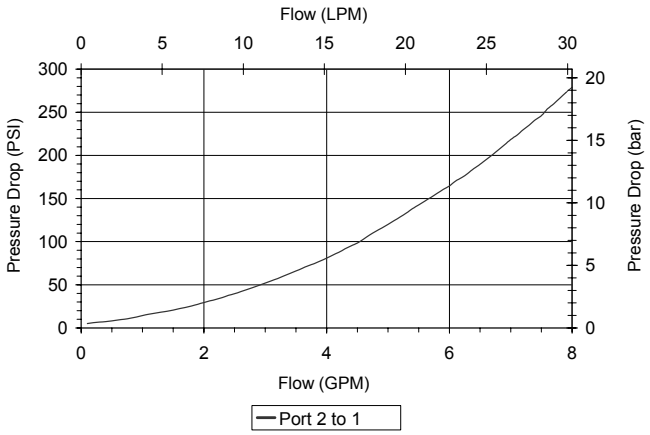


### VALVE SPECIFICATIONS

| | |
|---|---|
| Nominal Flow | 5 GPM (19 LPM) |
| Rated Operating Pressure | 3500 PSI (241 bar) |
| Typical Internal Leakage (150 SSU) | 0-5 drops/min |
| Viscosity Range | 36 to 3000 SSU (3 to 647 cSt) |
| Filtration | ISO 18/16/13 |
| Media Operating Temp. Range | -40° to 250°F (-40° to 120°C) |
| Weight | .08 lbs (.03 kg) |
| Operating Fluid Media | General Purpose Hydraulic Fluid |
| Cartridge Torque Requirements | 15 ft-lbs (20.3 Nm) |
| Cavity | MINI 2W |
| Cavity Form Tool (Finishing) | 40500003 |
| Seal Kit | 21191000 |

**WARNING:** *the specifications/application data shown in our catalogs and data sheets are intended only as a general guide for the product described (herein). Any specific application should not be undertaken without independent study, evaluation, and testing for suitability.*



Via Malavolti, 36 - 41122 Modena - ITALY - Phone +39 (059) 254895 - Fax +39 (059) 253512 - mail: tecnord@tecnord.com - **www.tecnord.com**

## DIMENSIONS

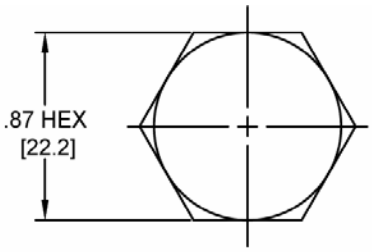


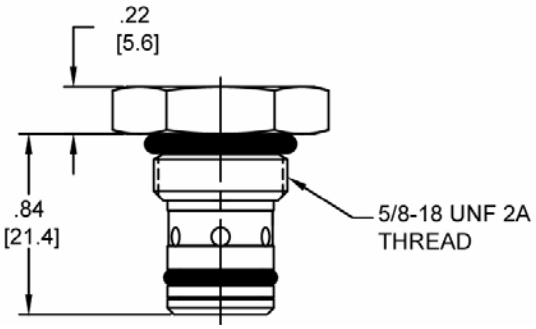


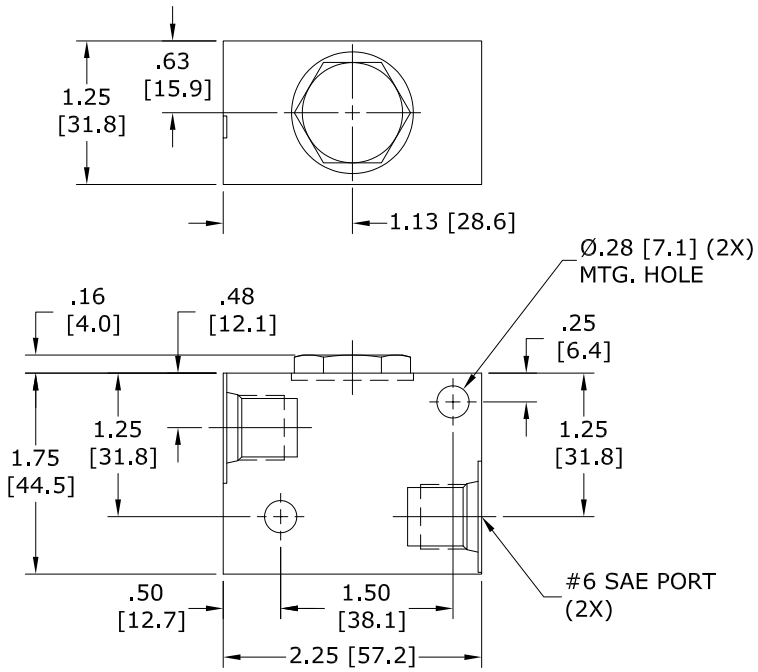


BODY WEIGHT: .40 lbs [.18 kg.]

*Body Weight: .29 lbs (.13 kg)*

## ORDERING INFORMATION

**MA-CVA – ____ – ____ – ____**

**OPTIONS**
Buna Standard **00**
Viton Standard **V0**

**CRACK PRESSURE**
**0005** 5 PSI
**0020** 20 PSI
± 10%

**BODIES**
**Blank** Without Body
**N** 1/4" NPTF Ports
**S** #6 SAE Ports

**WARNING:** *the specifications/application data shown in our catalogs and data sheets are intended only as a general guide for the product described (herein). Any specific application should not be undertaken without independent study, evaluation, and testing for suitability.*



Via Malavolti, 36 - 41122 Modena - ITALY - Phone +39 (059) 254895 - Fax +39 (059) 253512 - mail: tecnord@tecnord.com - **www.tecnord.com**

## HB-CVA DIRECT ACTING CHECK VALVE, POPPET

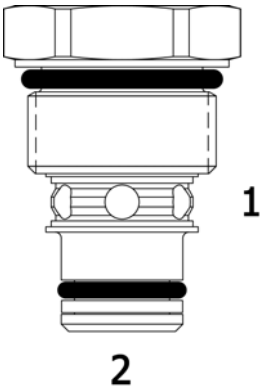


### DESCRIPTION

"High Pressure" 8 size, 3/4-16 thread, "Power" series, direct acting check valve.

### OPERATION

The HB-CVA allows free flow passage from (2) to (1), and blocks flow from (1) to (2). The cartridge has a fully guided check poppet, which is spring-biased closed until sufficient pressure is applied at (2) to open to (1).

### FEATURES

- Hardened parts for long life and low leakage.
- Optional bias springs for backpressure application flexibility.
- Fully guided poppet assembly.
- Industry common cavity.

### HYDRAULIC SYMBOL

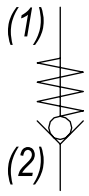


### PERFORMANCE

Actual Test Data (Cartridge Only)

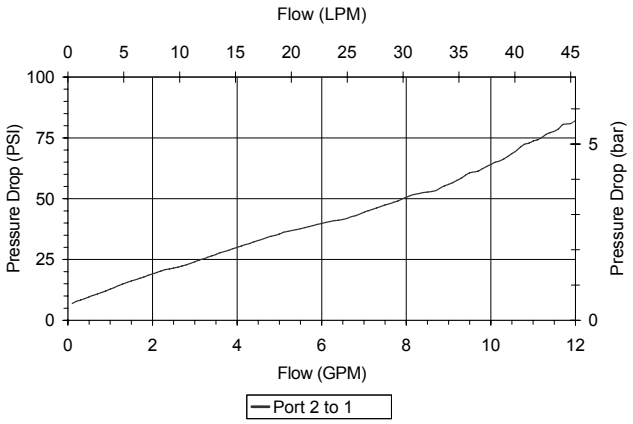


### VALVE SPECIFICATIONS

| | |
|---|---|
| Nominal Flow | 10 GPM (38 LPM) |
| Rated Operating Pressure | 4350 PSI (300 bar) |
| Typical Internal Leakage (150 SSU) | 0-5 drops/min |
| Viscosity Range | 36 to 3000 SSU (3 to 647 cSt) |
| Filtration | ISO 18/16/13 |
| Media Operating Temp. Range | -40° to 250°F (-40° to 120°C) |
| Weight | .10 lbs (.05 kg) |
| Operating Fluid Media | General Purpose Hydraulic Fluid |
| Cartridge Torque Requirements | 35 ft-lbs (47 Nm) |
| Cavity | POWER 2W |
| Cavity Form Tool (Finishing) | 40500005 |
| Seal Kit | 21191100 |

**WARNING:** *the specifications/application data shown in our catalogs and data sheets are intended only as a general guide for the product described (herein). Any specific application should not be undertaken without independent study, evaluation, and testing for suitability.*



Via Malavolti, 36 - 41122 Modena - ITALY - Phone +39 (059) 254895 - Fax +39 (059) 253512 - mail: tecnord@tecnord.com - **www.tecnord.com**

## DIMENSIONS

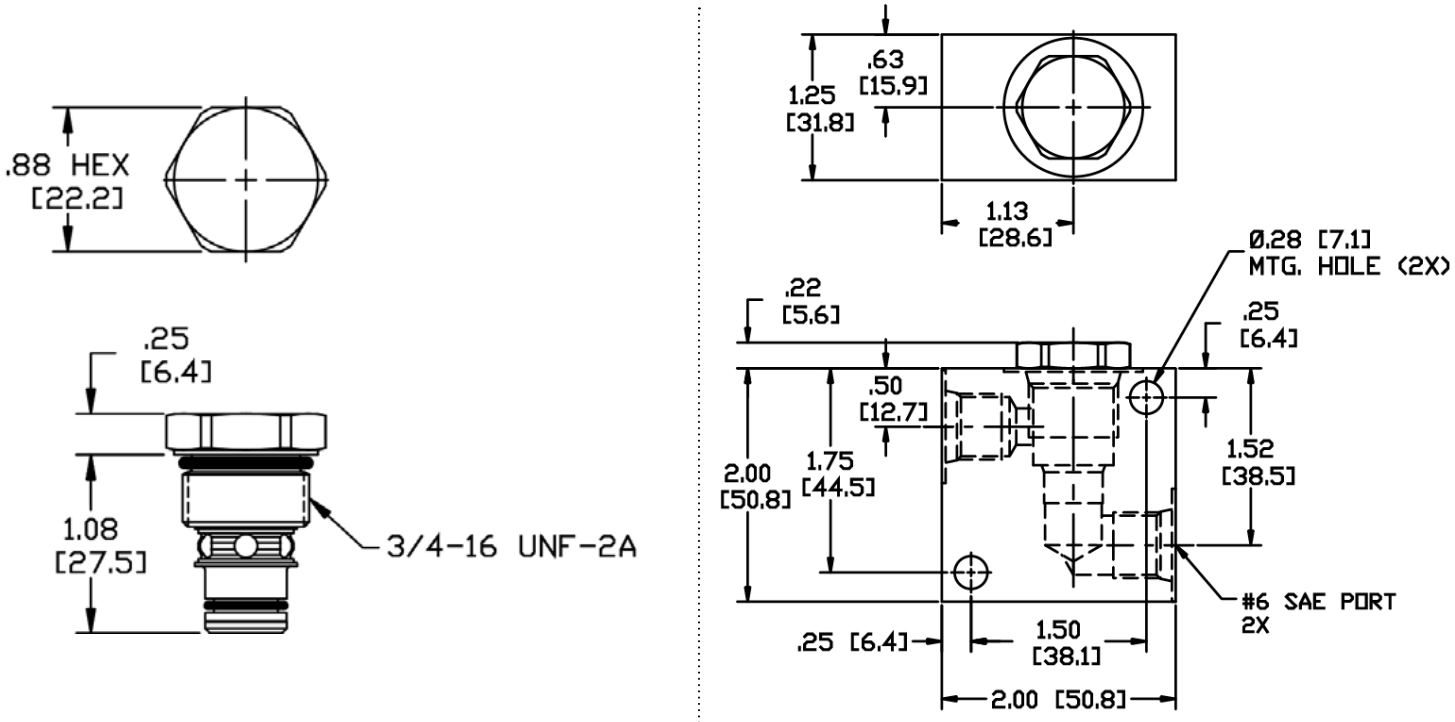


*Body Weight: .40 lbs (.18 kg)*

## ORDERING INFORMATION

**HB-CVA – ____ – ____ – ____**

**OPTIONS**

| | |
|---|---|
| Buna Standard | **00** |
| Viton Standard | **V0** |

**CRACK PRESSURE**

| | |
|---|---|
| **0005** | 5 PSI |
| **0010** | 10 PSI |
| **0030** | 30 PSI |
| **0070** | 70 PSI |
| | ± 10% |

**BODIES**

| | |
|---|---|
| **Blank** | Without Body |
| **N** | 1/4" NPTF Ports |
| **S** | #6 SAE Ports |

**Note: Aluminum, NOT durability rated for 4350 PSI. Consult factory for options.**

**WARNING:** *the specifications/application data shown in our catalogs and data sheets are intended only as a general guide for the product described (herein). Any specific application should not be undertaken without independent study, evaluation, and testing for suitability.*



Via Malavolti, 36 - 41122 Modena - ITALY - Phone +39 (059) 254895 - Fax +39 (059) 253512 - mail: tecnord@tecnord.com - **www.tecnord.com**

## DE-CVA DIRECT ACTING CHECK VALVE, POPPET

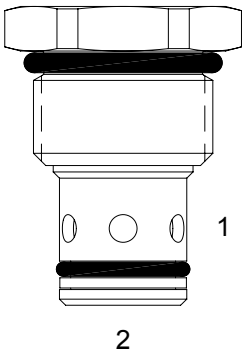


### DESCRIPTION

10 size, 7/8-14 thread, “Delta” series, direct acting check valve.

### OPERATION

The DE-CVA allows free flow passage from (2) to (1), and blocks flow from (1) to (2). The cartridge has a fully guided check poppet, which is spring-biased closed, until sufficient pressure is applied at (2) to open to (1).

### FEATURES

- Hardened parts for long life and low leakage.
- Optional bias springs for backpressure application flexibility.
- Fully guided poppet assembly.
- Industry common cavity.

### HYDRAULIC SYMBOL

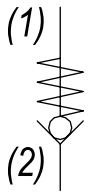


*Drop-In pilot pistons can be used (except the 135 and 150 PSI version) to create P.O. Check Valve Function, see the Hydraulic Integrated Circuits section for details.*

### PERFORMANCE

Actual Test Data (Cartridge Only)

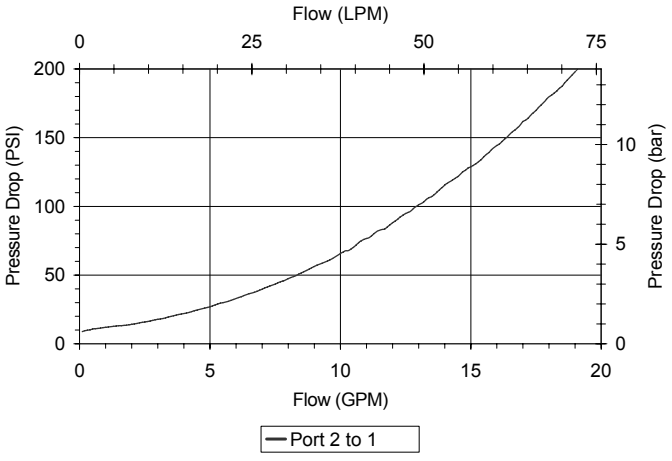


### VALVE SPECIFICATIONS

| | |
|---|---|
| Nominal Flow | 15 GPM (57 LPM) |
| Rated Operating Pressure | 3500 PSI (241 bar) |
| Typical Internal Leakage (150 SSU) | 0-5 drops/min |
| Viscosity Range | 36 to 3000 SSU (3 to 647 cSt) |
| Filtration | ISO 18/16/13 |
| Media Operating Temp. Range | -40° to 250°F (-40° to 120°C) |
| Weight | .15 lbs (.07 kg) |
| Operating Fluid Media | General Purpose Hydraulic Fluid |
| Cartridge Torque Requirements | 30 ft-lbs (40.6 Nm) |
| Cavity | DELTA 2W |
| Cavity Form Tool (Finishing) | 40500000 |
| Seal Kit | 21191200 |

**WARNING:** *the specifications/application data shown in our catalogs and data sheets are intended only as a general guide for the product described (herein). Any specific application should not be undertaken without independent study, evaluation, and testing for suitability.*



Via Malavolti, 36 - 41122 Modena - ITALY - Phone +39 (059) 254895 - Fax +39 (059) 253512 - mail: tecnord@tecnord.com - **www.tecnord.com**

## DIMENSIONS

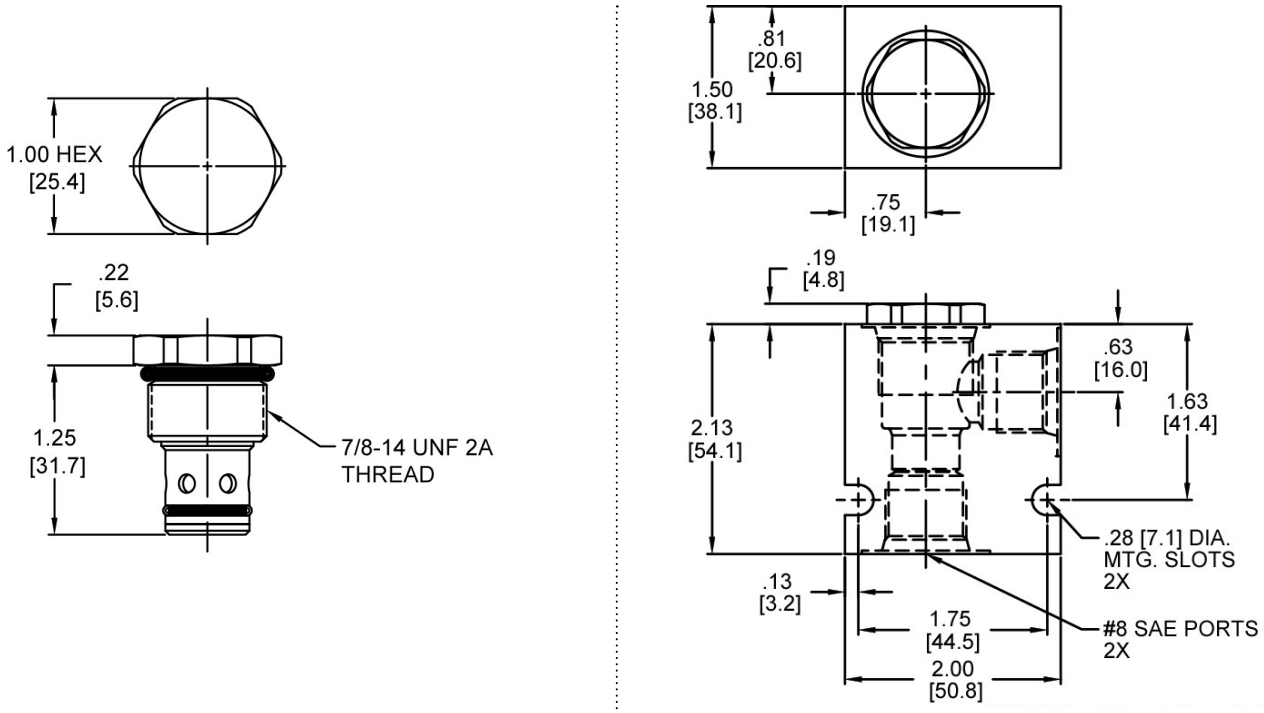


*Body Weight: .47 lbs (.21 kg)*

## ORDERING INFORMATION

**DE-CVA – ____ – ____ – ____**

**OPTIONS**

| | |
|---|---|
| Buna Standard | **00** |
| Viton Standard | **V0** |

**CRACK RESSURE**

| | |
|---|---|
| **0010** | 10 PSI |
| **0020** | 20 PSI |
| **0035** | 35 PSI |
| **0070** | 70 PSI |
| **0100** | 100 PSI |
| **0135** | 135 PSI |
| **0150** | 150 PSI |
| | ± 10% |

**BODIES**

| | |
|---|---|
| **Blank** | Without Body |
| **N** | 3/8” NPTF Ports |
| **S** | #8 SAE Ports |

**WARNING:** *the specifications/application data shown in our catalogs and data sheets are intended only as a general guide for the product described (herein). Any specific application should not be undertaken without independent study, evaluation, and testing for suitability.*



Via Malavolti, 36 - 41122 Modena - ITALY - Phone +39 (059) 254895 - Fax +39 (059) 253512 - mail: tecnord@tecnord.com - **www.tecnord.com**

## HE-CVA DIRECT ACTING CHECK VALVE, POPPET

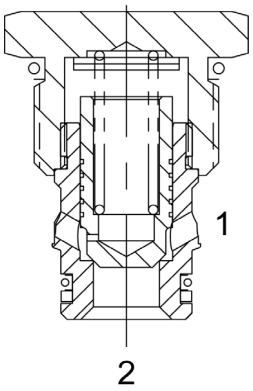


### DESCRIPTION

"High Pressure" 10 size, 7/8-14 thread, "Delta" series, direct acting check valve.

### OPERATION

The HE-CVA allows free flow passage from (2) to (1), and blocks flow from (1) to (2). The cartridge has a fully guided check poppet, which is spring-biased closed, until sufficient pressure is applied at (2) to open to (1).

### FEATURES

- Hardened parts for long life and low leakage.
- Optional bias springs for backpressure application flexibility.
- Fully guided poppet assembly.
- Industry common cavity.

### HYDRAULIC SYMBOL

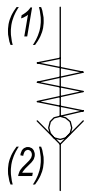


*Drop-In pilot pistons can be used (except the 135 and 150 PSI version) to create P.O. Check Valve Function, see the Hydraulic Integrated Circuits section for details.*

### PERFORMANCE

Actual Test Data (Cartridge Only)

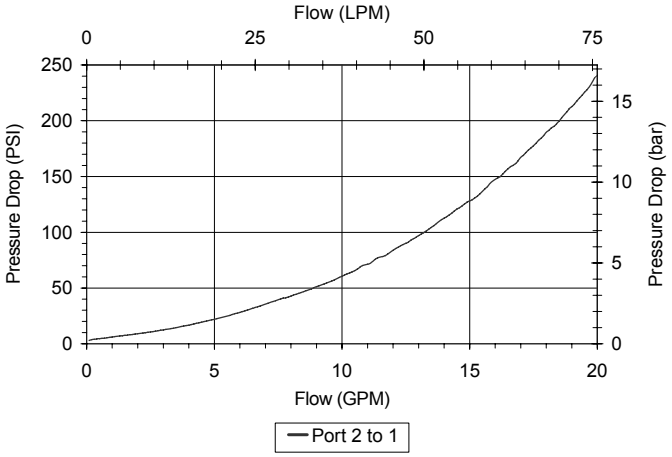


### VALVE SPECIFICATIONS

| | |
|---|---|
| Nominal Flow | 15 GPM (57 LPM) |
| Rated Operating Pressure | 5000 PSI (345 bar) |
| Typical Internal Leakage (150 SSU) | 0-5 drops/min |
| Viscosity Range | 36 to 3000 SSU (3 to 647 cSt) |
| Filtration | ISO 18/16/13 |
| Media Operating Temp. Range | -40° to 250°F (-40° to 120°C) |
| Weight | 1.23 lbs (.56 kg) |
| Operating Fluid Media | General Purpose Hydraulic Fluid |
| Cartridge Torque Requirements | 50 ft-lbs (67.8 Nm) |
| Cavity | DELTA 2W |
| Cavity Form Tool (Finishing) | 40500000 |
| Seal Kit | 21191200 |

**WARNING:** *the specifications/application data shown in our catalogs and data sheets are intended only as a general guide for the product described (herein). Any specific application should not be undertaken without independent study, evaluation, and testing for suitability.*



Via Malavolti, 36 - 41122 Modena - ITALY - Phone +39 (059) 254895 - Fax +39 (059) 253512 - mail: tecnord@tecnord.com - **www.tecnord.com**

## DIMENSIONS

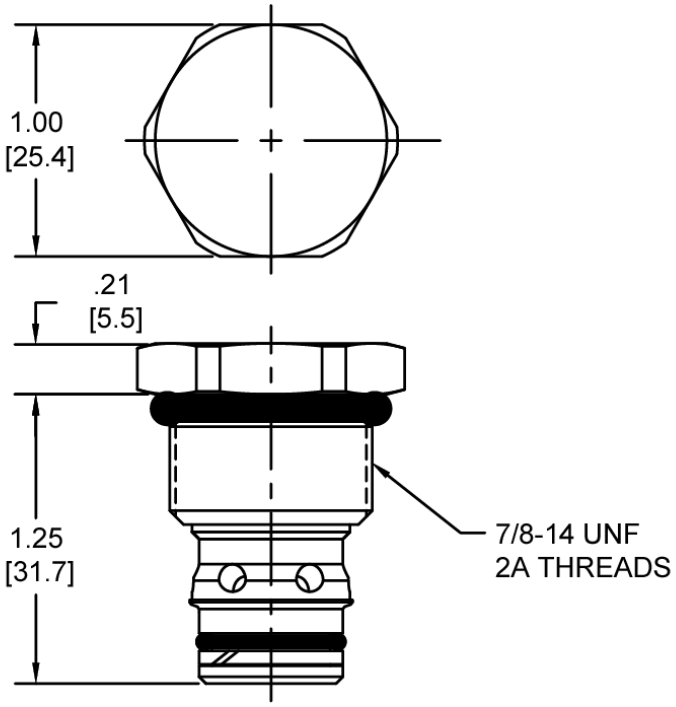


## ORDERING INFORMATION

**HE-CVA – ____ – ____ – ____**

**OPTIONS**

Buna Standard **00**
Viton Standard **V0**

**CRACK PRESSURE**

**0005** 5 PSI
**0010** 10 PSI
**0020** 20 PSI
**0035** 35 PSI
**0070** 70 PSI
**0090** 90 PSI
**0135** 135 PSI
**0150** 150 PSI
± 10%

**BODIES**

**Consult Factory**

**WARNING**
**DO NOT USE ALUMINUM BODY**
**HIGH PRESSURE (5000 PSI) PRODUCT**

**WARNING:** *the specifications/application data shown in our catalogs and data sheets are intended only as a general guide for the product described (herein). Any specific application should not be undertaken without independent study, evaluation, and testing for suitability.*



Via Malavolti, 36 - 41122 Modena - ITALY - Phone +39 (059) 254895 - Fax +39 (059) 253512 - mail: tecnord@tecnord.com - **www.tecnord.com**

## HT-CVA DIRECT ACTING CHECK VALVE, POPPET

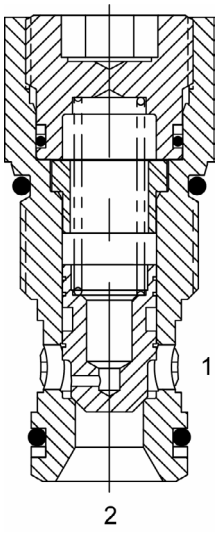


### DESCRIPTION

"High Pressure" 12 size, 1 1/16-12 thread, "Tecnord" series, direct acting check valve.

### OPERATION

The HT-CVA allows flow passage from (2) to (1), while normally blocking oil flow from (1) to (2). The cartridge has a fully guided poppet, which is spring biased closed, until sufficient pressure is applied at (2) to open to (1).

### FEATURES

- Hardened parts for long life and low leakage.
- Industry common cavity.
- Optional bias springs for backpressure application flexibility.

### HYDRAULIC SYMBOL

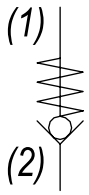


### PERFORMANCE

Actual Test Data (Cartridge Only)

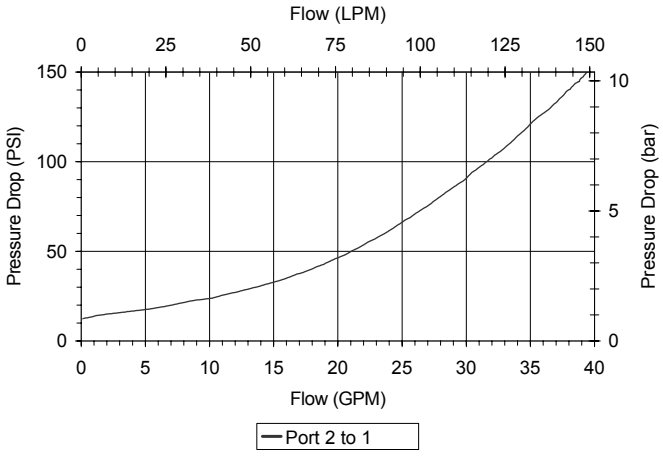


### VALVE SPECIFICATIONS

| | |
|---|---|
| Nominal Flow | 35 GPM (132 LTR/M) |
| Rated Operating Pressure | 5000 PSI (345 bar) |
| Typical Internal Leakage (150 SSU) | 0-5 drops/min |
| Viscosity Range | 36 to 3000 SSU (3 to 647 cSt) |
| Filtration | ISO 18/16/13 |
| Media Operating Temp. Range | -40° to 250°F (-40° to 120°C) |
| Weight | .55 lbs (.25 kg) |
| Operating Fluid Media | General Purpose Hydraulic Fluid |
| Cartridge Torque Requirements | 70 ft-lbs (95 Nm) |
| Cavity | TECNORD 2W |
| Cavity Form Tool (Finishing) | 40500032 |
| Seal Kit | 21191300 |

**WARNING:** *the specifications/application data shown in our catalogs and data sheets are intended only as a general guide for the product described (herein). Any specific application should not be undertaken without independent study, evaluation, and testing for suitability.*



Via Malavolti, 36 - 41122 Modena - ITALY - Phone +39 (059) 254895 - Fax +39 (059) 253512 - mail: tecnord@tecnord.com - **www.tecnord.com**

## DIMENSIONS

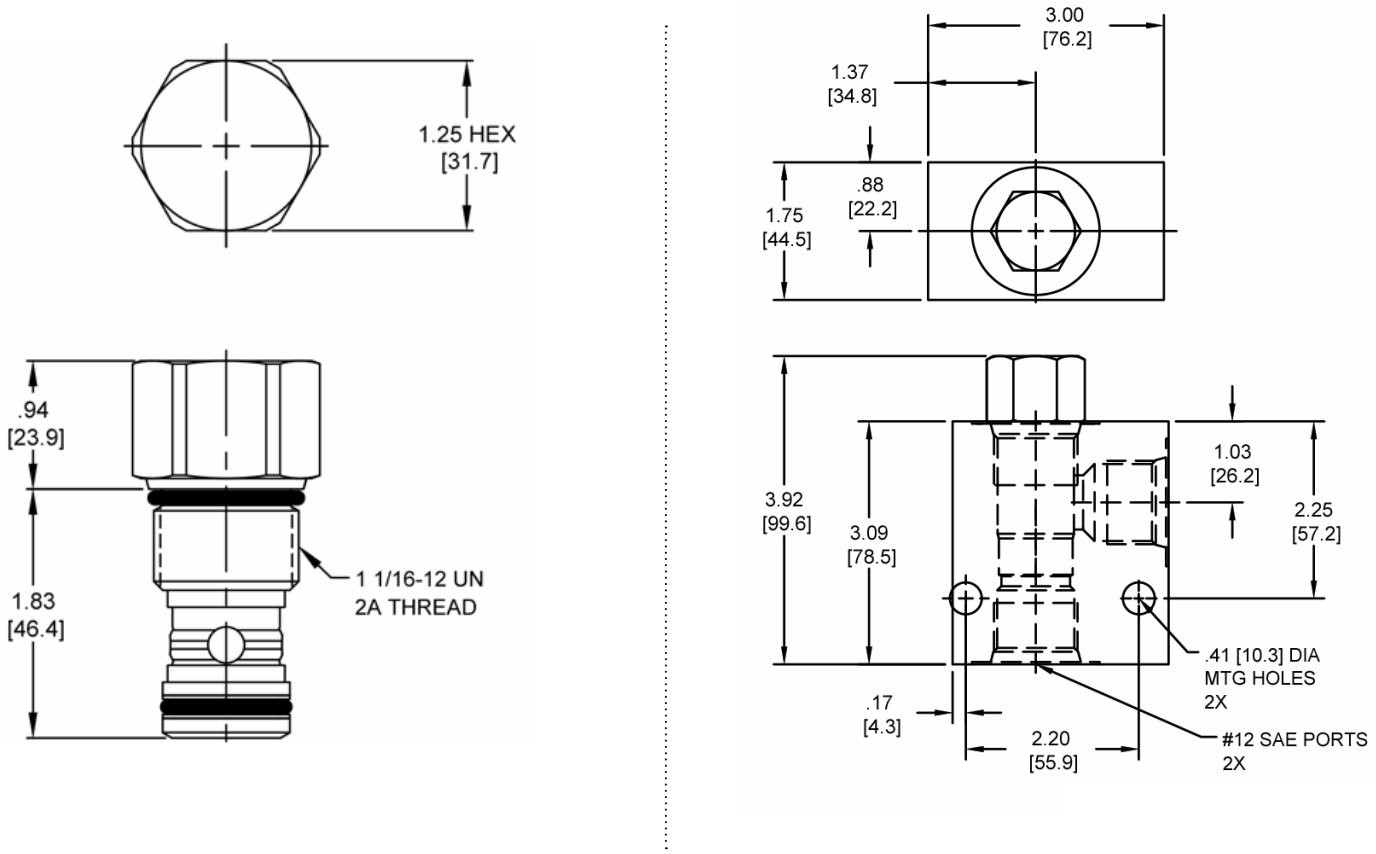


*Body Weight: 3.71 lbs (1.68 kg)*

## ORDERING INFORMATION

**HT-CVA – ____ – ____ – ____**

**OPTIONS**
Buna Standard **00**
Viton Standard **V0**

**CRACK PRESSURE**
**0010** 10 PSI
**0030** 30 PSI
**0050** 50 PSI
± 10%

**BODIES**
**Blank** Without Body
**S** #12 SAE Ports

**WARNING:** *the specifications/application data shown in our catalogs and data sheets are intended only as a general guide for the product described (herein). Any specific application should not be undertaken without independent study, evaluation, and testing for suitability.*



Via Malavolti, 36 - 41122 Modena - ITALY - Phone +39 (059) 254895 - Fax +39 (059) 253512 - mail: tecnord@tecnord.com - **www.tecnord.com**

## SJ-CVA DIRECT ACTING CHECK VALVE, POPPET

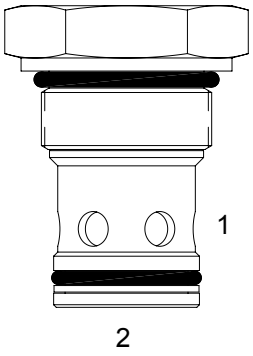


### DESCRIPTION

16 size, 1 5/16-12 thread, “Super” series, direct acting check valve.

### OPERATION

The SJ-CVA allows free flow from (2) to (1) and blocks flow from (1) to (2). The cartridge has a fully guided poppet, which is spring-biased closed, until sufficient pressure is applied at (2) to open to (1).

### FEATURES

- Hardened parts for long life and low leakage.
- Industry common cavity.
- Optional bias springs for backpressure application flexibility.

### HYDRAULIC SYMBOL

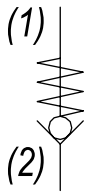


### PERFORMANCE

Actual Test Data (Cartridge Only)

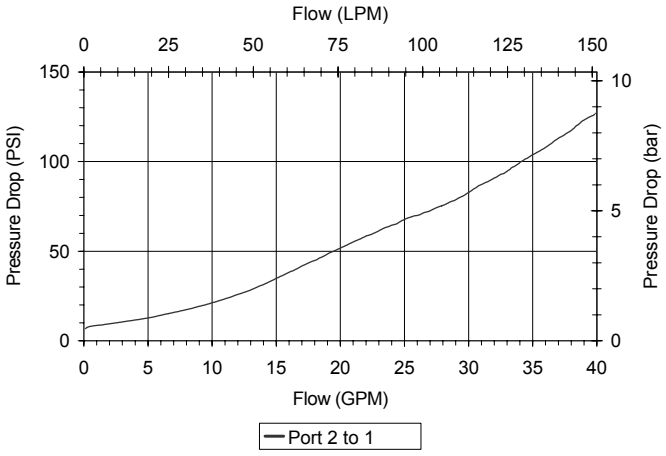


### VALVE SPECIFICATIONS

| | |
|---|---|
| Nominal Flow | 40 GPM (151 LPM) |
| Rated Operating Pressure | 3500 PSI (241 bar) |
| Typical Internal Leakage (150 SSU) | 0-5 drops/min |
| Viscosity Range | 36 to 3000 SSU (3 to 647 cSt) |
| Filtration | ISO 18/16/13 |
| Media Operating Temp. Range | -40° to 250°F (-40° to 120°C) |
| Weight | .67 lbs (.30 kg) |
| Operating Fluid Media | General Purpose Hydraulic Fluid |
| Cartridge Torque Requirements | 90 ft-lbs (122 Nm) |
| Cavity | SUPER 2W |
| Cavity Form Tool (Finishing) | 40500017 |
| Seal Kit | 21191400 |

**WARNING:** *the specifications/application data shown in our catalogs and data sheets are intended only as a general guide for the product described (herein). Any specific application should not be undertaken without independent study, evaluation, and testing for suitability.*



Via Malavolti, 36 - 41122 Modena - ITALY - Phone +39 (059) 254895 - Fax +39 (059) 253512 - mail: tecnord@tecnord.com - **www.tecnord.com**

## DIMENSIONS

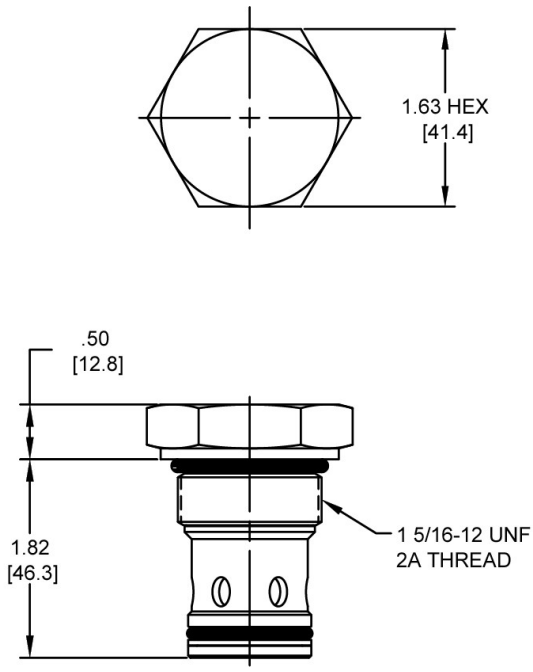


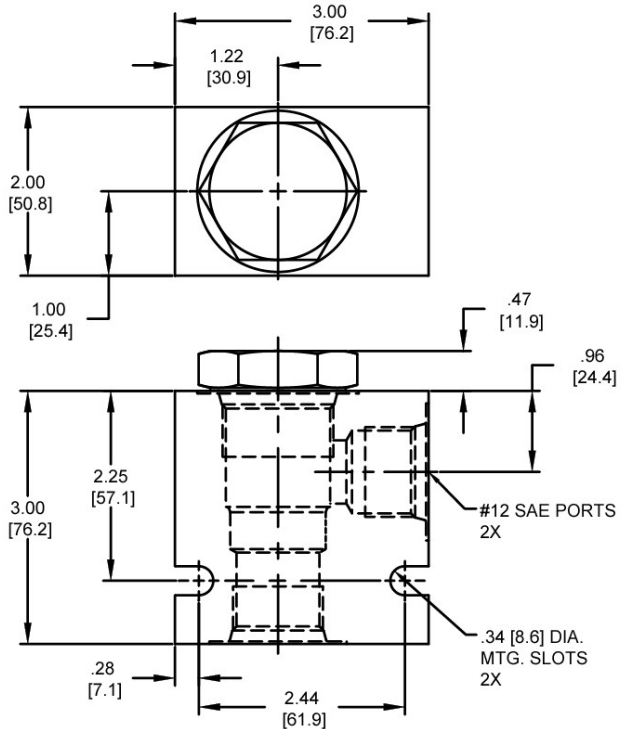


*Body Weight: 1.29 lbs (.58 kg)*

## ORDERING INFORMATION

**SJ-CVA – ____ – ____ – ____**

**OPTIONS**

| | |
|---|---|
| Buna Standard | **00** |
| Viton Standard | **V0** |

**CRACK RESSURE**

| | |
|---|---|
| **0005** | 5 PSI |
| **0010** | 10 PSI |
| **0030** | 30 PSI |
| **0050** | 50 PSI |
| **0065** | 65 PSI |
| **0135** | 135 PSI |
| | ± 10% |

**BODIES**

| | |
|---|---|
| **Blank** | Without Body |
| **N** | 3/4” NPTF Ports |
| **S** | #12 SAE Ports |

**WARNING:** *the specifications/application data shown in our catalogs and data sheets are intended only as a general guide for the product described (herein). Any specific application should not be undertaken without independent study, evaluation, and testing for suitability.*

## DE-CVB DIRECT ACTING CHECK VALVE, BALL

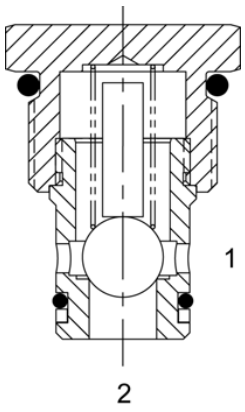


### DESCRIPTION

10 size, 7/8-14 thread, “Delta” series, direct acting, check valve.

### OPERATION

The DE-CVB allows free flow passage from (2) to (1), and blocks flow from (1) to (2). The cartridge has a hardened ball, which is spring-biased closed, until sufficient pressure is applied at (2) to open to (1).

### FEATURES

- Hardened seat for long life and low leakage.
- Optional bias springs for backpressure application flexibility.
- Industry common cavity.

### HYDRAULIC SYMBOL

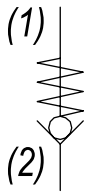


### PERFORMANCE

Actual Test Data (Cartridge Only)

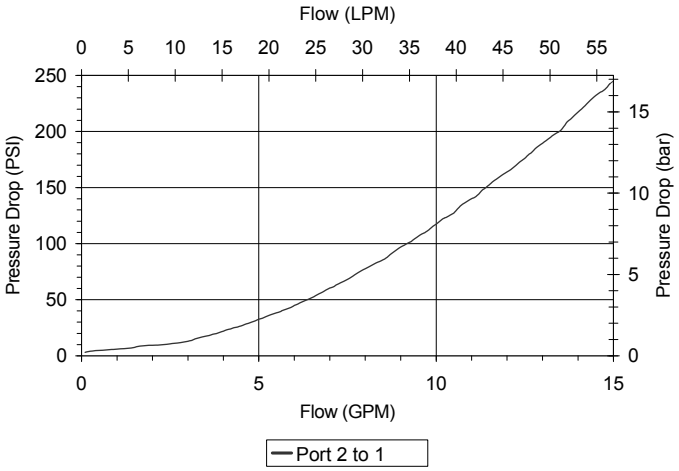


### VALVE SPECIFICATIONS

| | |
|---|---|
| Nominal Flow | 10 GPM (38 LPM) |
| Rated Operating Pressure | 3500 PSI (241 bar) |
| Typical Internal Leakage (150 SSU) | 0-5 drops/min |
| Viscosity Range | 36 to 3000 SSU (3 to 647 cSt) |
| Filtration | ISO 18/16/13 |
| Media Operating Temp. Range | -40° to 250°F (-40° to 120°C) |
| Weight | .14 lbs (.06 kg) |
| Operating Fluid Media | General Purpose Hydraulic Fluid |
| Cartridge Torque Requirements | 30 ft-lbs (40.6 Nm) |
| Cavity | DELTA 2W |
| Cavity Form Tool (Finishing) | 40500000 |
| Seal Kit | 21191000 |

**WARNING:** *the specifications/application data shown in our catalogs and data sheets are intended only as a general guide for the product described (herein). Any specific application should not be undertaken without independent study, evaluation, and testing for suitability.*



Via Malavolti, 36 - 41122 Modena - ITALY - Phone +39 (059) 254895 - Fax +39 (059) 253512 - mail: tecnord@tecnord.com - **www.tecnord.com**

## DIMENSIONS

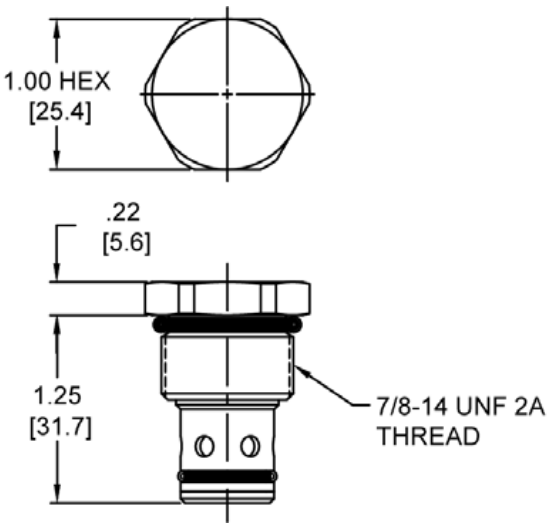


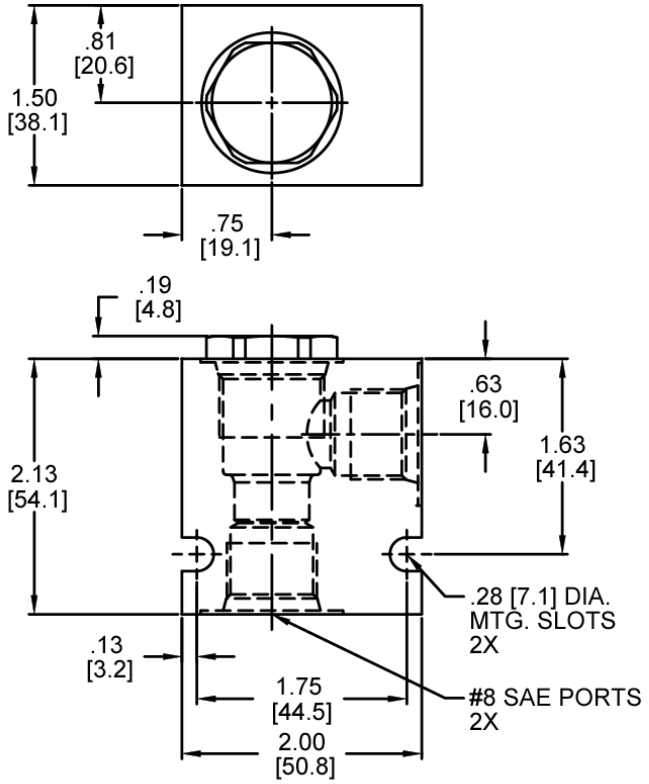


*Body Weight: .47 lbs (.21 kg)*

## ORDERING INFORMATION

**DE-CVB – ____ – ____ – ____**

**OPTIONS**

| | |
|---|---|
| Buna Standard | **00** |
| Viton Standard | **V0** |

**CRACK PRESSURE**

| | |
|---|---|
| **0005** | 5 PSI |
| **0015** | 15 PSI |
| | ± 10% |

**BODIES**

| | |
|---|---|
| **Blank** | Without Body |
| **N** | 3/8" NPTF Ports |
| **S** | #8 SAE Ports |

**WARNING:** *the specifications/application data shown in our catalogs and data sheets are intended only as a general guide for the product described (herein). Any specific application should not be undertaken without independent study, evaluation, and testing for suitability.*



Via Malavolti, 36 - 41122 Modena - ITALY - Phone +39 (059) 254895 - Fax +39 (059) 253512 - mail: tecnord@tecnord.com - **www.tecnord.com**

## PB-CVC DIRECT ACTING CHECK VALVE, GUIDED BALL

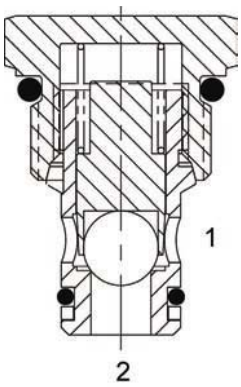


### DESCRIPTION

8 size, 3/4-16 thread, “Power” series, direct acting check valve.

### OPERATION

The PB-CVC allows free flow passage from (2) to (1), and blocks flow from (1) to (2). The cartridge has a fully guided hardened ball, which is spring-biased closed, until sufficient pressure is applied at (2) to open to (1).

### FEATURES

- Hardened parts for long life and low leakage.
- Optional bias springs for backpressure application flexibility.
- Fully guided ball assembly.
- Industry common cavity.

### HYDRAULIC SYMBOL

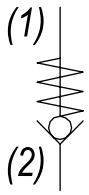


### PERFORMANCE

Actual Test Data (Cartridge Only)

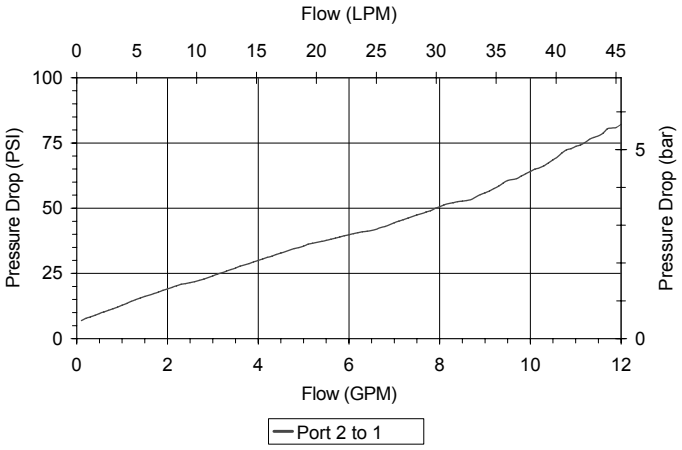


### VALVE SPECIFICATIONS

| | |
|---|---|
| Nominal Flow | 10 GPM (38 LPM) |
| Rated Operating Pressure | 3500 PSI (241 bar) |
| Typical Internal Leakage (150 SSU) | 0-5 drops/min |
| Viscosity Range | 36 to 3000 SSU (3 to 647 cSt) |
| Filtration | ISO 18/16/13 |
| Media Operating Temp. Range | -40° to 250°F (-40° to 120°C) |
| Weight | .10 lbs (.05 kg) |
| Operating Fluid Media | General Purpose Hydraulic Fluid |
| Cartridge Torque Requirements | 25 ft-lbs (34 Nm) |
| Cavity | POWER 2W |
| Cavity Form Tool (Finishing) | 40500005 |
| Seal Kit | 21191100 |

**WARNING:** *the specifications/application data shown in our catalogs and data sheets are intended only as a general guide for the product described (herein). Any specific application should not be undertaken without independent study, evaluation, and testing for suitability.*



Via Malavolti, 36 - 41122 Modena - ITALY - Phone +39 (059) 254895 - Fax +39 (059) 253512 - mail: tecnord@tecnord.com - **www.tecnord.com**

## DIMENSIONS

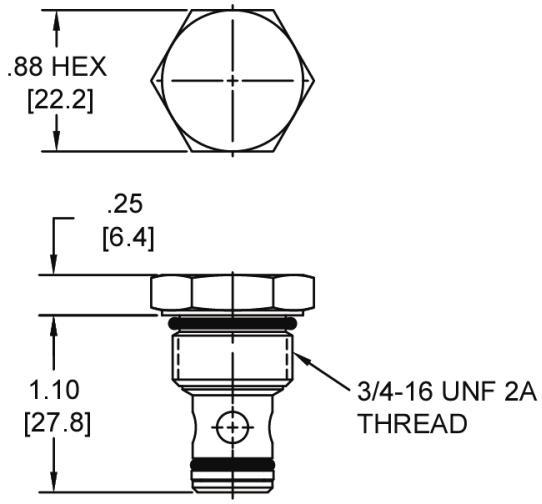


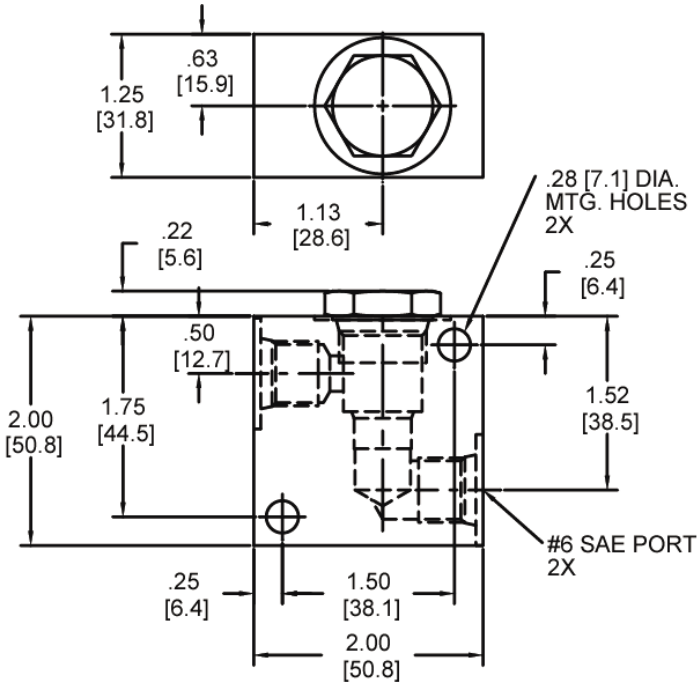


*Body Weight: .39 lbs (.18 kg)*

## ORDERING INFORMATION

**PB-CVC –** _____ **–** _____ **–** _____

**OPTIONS**

| | |
|---|---|
| Buna Standard | **00** |
| Viton Standard | **V0** |

**CRACK PRESSURE**

| | |
|---|---|
| **0005** | 5 PSI |
| **0020** | 20 PSI |
| **0030** | 30 PSI |
| **0050** | 50 PSI |
| | ± 10% |

**BODIES**

| | |
|---|---|
| **Blank** | Without Body |
| **N** | 1/4” NPTF Ports |
| **S** | #6 SAE Ports |

**WARNING:** *the specifications/application data shown in our catalogs and data sheets are intended only as a general guide for the product described (herein). Any specific application should not be undertaken without independent study, evaluation, and testing for suitability.*

## DE-CVC DIRECT ACTING CHECK VALVE, GUIDED BALL

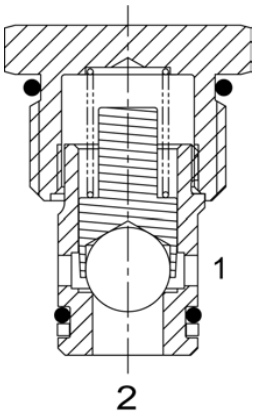


### DESCRIPTION

10 size, 7/8-14 thread, “Delta” series, direct acting check valve.

### OPERATION

The DE-CVC allows free flow passage from (2) to (1), and blocks flow from (1) to (2). The cartridge has a fully guided hardened ball, which is spring-biased closed, until sufficient pressure is applied at (2) to open to (1).

### FEATURES

- Hardened parts for long life and low leakage.
- Optional bias springs for backpressure application flexibility.
- Fully guided ball assembly.
- Industry common cavity.

### HYDRAULIC SYMBOL

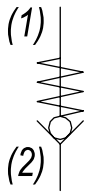


### PERFORMANCE

Actual Test Data (Cartridge Only)

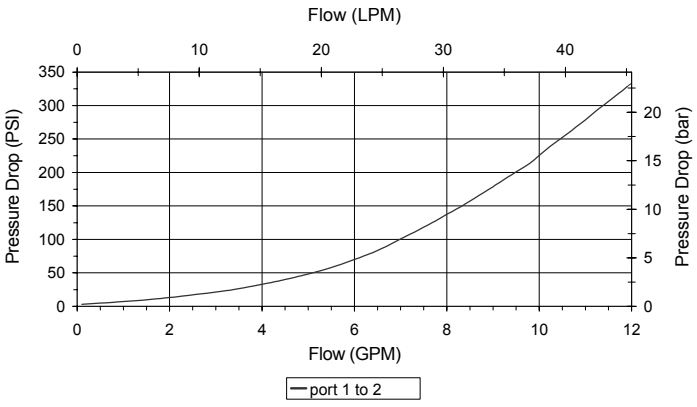


### VALVE SPECIFICATIONS

| | |
|---|---|
| Nominal Flow | 8 GPM (30 LPM) |
| Rated Operating Pressure | 3500 PSI (241 bar) |
| Typical Internal Leakage (150 SSU) | 0-5 drops/min |
| Viscosity Range | 36 to 3000 SSU (3 to 647 cSt) |
| Filtration | ISO 18/16/13 |
| Media Operating Temp. Range | -40° to 250°F (-40° to 120°C) |
| Weight | .15 lbs (.07 kg) |
| Operating Fluid Media | General Purpose Hydraulic Fluid |
| Cartridge Torque Requirements | 30 ft-lbs (40.6 Nm) |
| Cavity | DELTA 2W |
| Cavity Form Tool (Finishing) | 40500000 |
| Seal Kit | 21191200 |

**WARNING:** *the specifications/application data shown in our catalogs and data sheets are intended only as a general guide for the product described (herein). Any specific application should not be undertaken without independent study, evaluation, and testing for suitability.*



Via Malavolti, 36 - 41122 Modena - ITALY - Phone +39 (059) 254895 - Fax +39 (059) 253512 - mail: tecnord@tecnord.com - **www.tecnord.com**

## DIMENSIONS

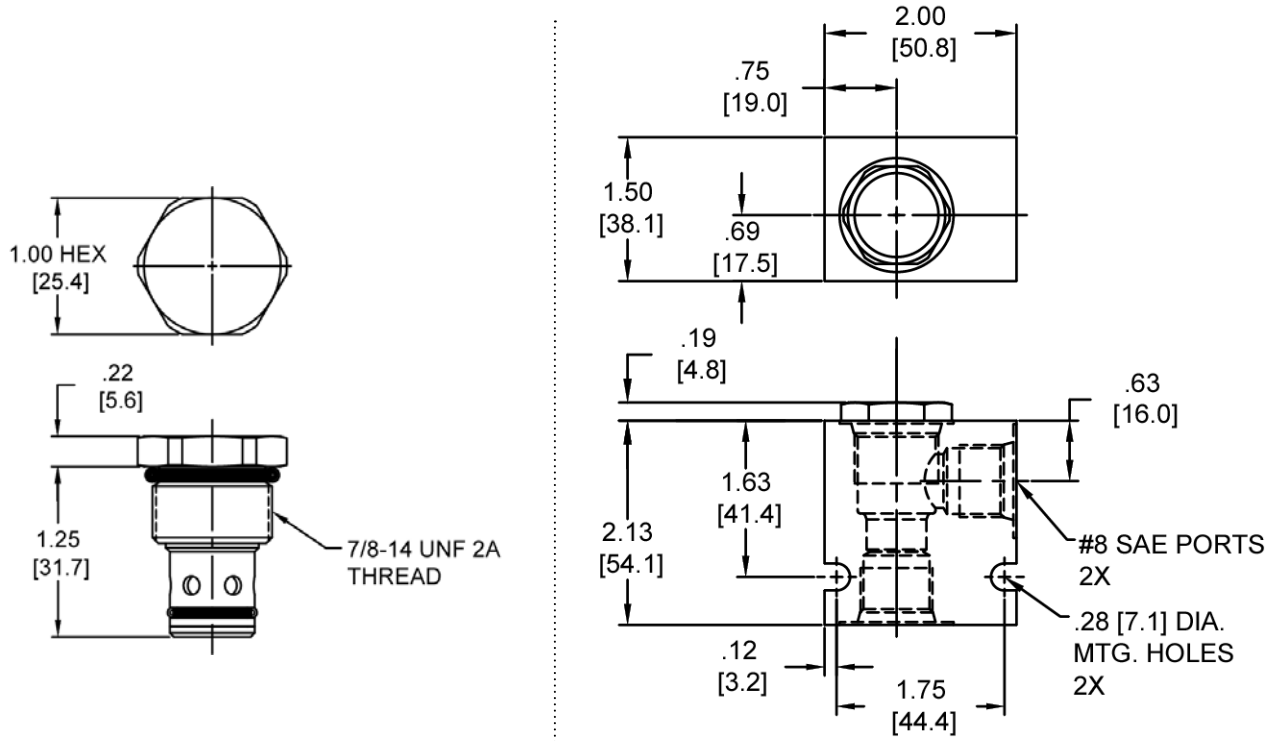


*Body Weight: .47 lbs (.21 kg)*

## ORDERING INFORMATION

**DE-CVC – ____ – ____ – ____**

**OPTIONS**

| | |
|---|---|
| Buna Standard | **00** |
| Viton Standard | **V0** |

**CRACK PRESSURE**

| | |
|---|---|
| **0003** | 3 PSI |
| **0005** | 5 PSI |
| **0010** | 10 PSI |
| **0020** | 20 PSI |
| **0035** | 35 PSI |
| **0050** | 50 PSI |
| **0075** | 75 PSI |
| **0095** | 95 PSI |
| | ± 10% |

**BODIES**

| | |
|---|---|
| **Blank** | Without Body |
| **N** | 3/8" NPTF Ports |
| **S** | #8 SAE Ports |

**WARNING:** *the specifications/application data shown in our catalogs and data sheets are intended only as a general guide for the product described (herein). Any specific application should not be undertaken without independent study, evaluation, and testing for suitability.*

## QS-CVL CHECK VALVE, INSERT TYPE

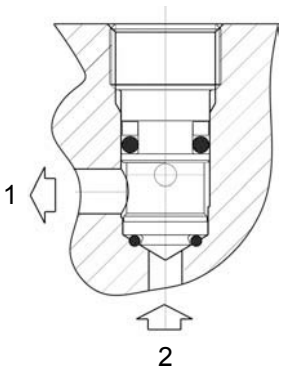


### DESCRIPTION

Special cavity, insert type, direct acting check valve.

### OPERATION

The QS-CVL allows free flow passage from (2) to (1).

The valve is commonly used on load sensing lines to sense the working pressure of the functions of the circuit. The check valve is without spring inside.

### HYDRAULIC SYMBOL

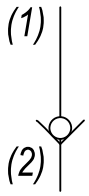


### PERFORMANCE

Actual Test Data (Cartridge Only)

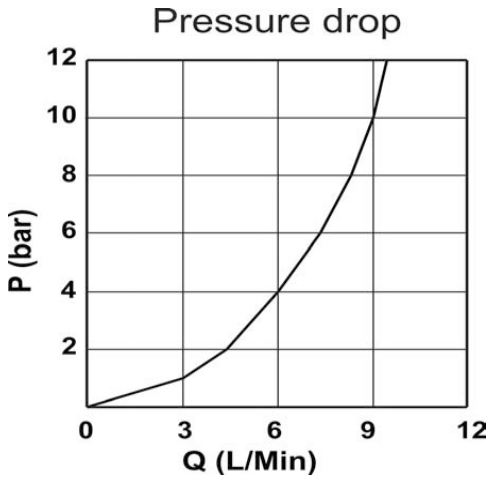


### VALVE SPECIFICATIONS

| | |
|---|---|
| Nominal Flow | 1 GPM (4 LPM) |
| Rated Operating Pressure | 3500 PSI (241 bar) |
| Typical Internal Leakage (150 SSU) | 1 cu in/min (16 ml/min) |
| Viscosity Range | 36 to 3000 SSU (3 to 647 cSt) |
| Filtration | ISO 18/16/13 |
| Media Operating Temp. Range | -40° to 250°F (-40° to 120°C) |
| Weight | .16 lbs (.07 kg) |
| Operating Fluid Media | General Purpose Hydraulic Fluid |
| Cartridge Torque Requirements | 10 - 12 Nm |
| Cavity | T151 |
| Cavity Tools Kit (form tool, reamer, tap) | K-T151 |

**WARNING:** *the specifications/application data shown in our catalogs and data sheets are intended only as a general guide for the product described (herein). Any specific application should not be undertaken without independent study, evaluation, and testing for suitability.*

## DIMENSIONS

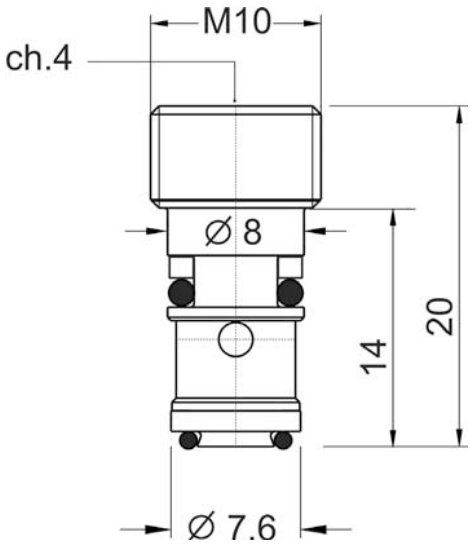


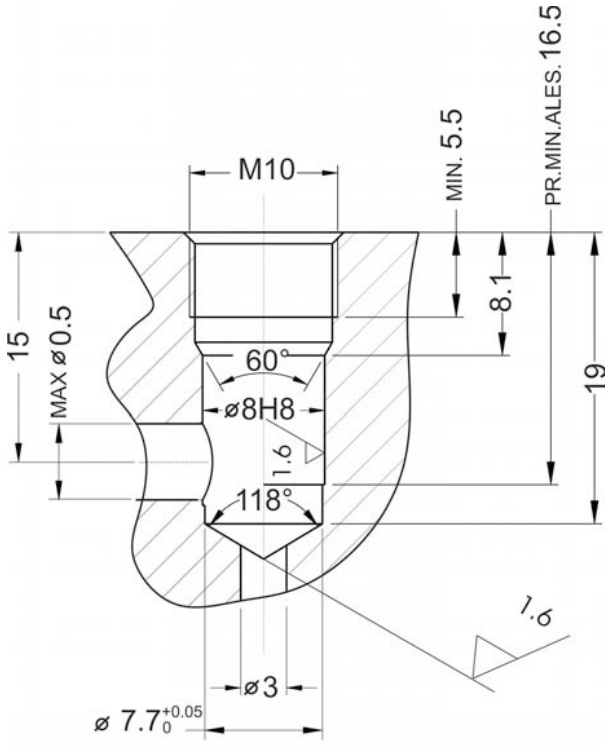


## ORDERING INFORMATION

**QS-CVL – ____ – 00**

**OPTIONS**

Buna Standard **00**

Viton Standard **V0**

**WARNING:** *the specifications/application data shown in our catalogs and data sheets are intended only as a general guide for the product described (herein). Any specific application should not be undertaken without independent study, evaluation, and testing for suitability.*



Via Malavolti, 36 - 41122 Modena - ITALY - Phone +39 (059) 254895 - Fax +39 (059) 253512 - mail: tecnord@tecnord.com - **www.tecnord.com**

## MA-CVS DIRECT ACTING CHECK VALVE, SOFT SEAT, POPPET

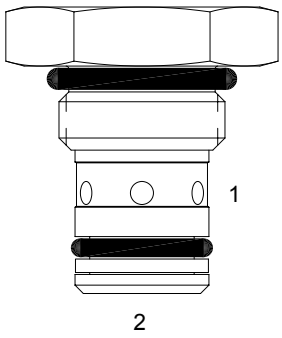


### DESCRIPTION

7 size, 5/8-18 Thread, “Mini” series, direct acting check valve, soft seat, poppet.

### OPERATION

The MA-CVS allows free flow (2) to (1) and blocks flow from (1) to (2). The cartridge has a fully guided poppet, which is spring-biased closed, until sufficient pressure is applied at (2) to open (1).

### FEATURES

- Soft seat for ultra low leakage.
- Industry common cavity.
- Optional bias springs for backpressure application flexibility.
- Fully guided poppet.

### HYDRAULIC SYMBOL

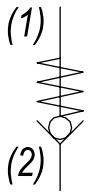


### PERFORMANCE

Actual Test Data (Cartridge Only)

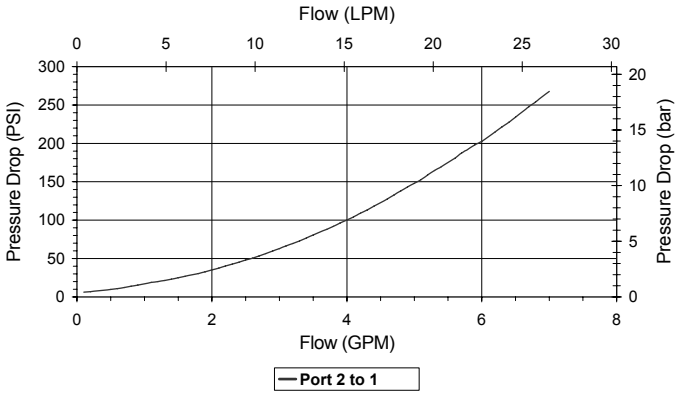


### VALVE SPECIFICATIONS

| | |
|---|---|
| Nominal Flow | 2.5 GPM (9.5 LPM) |
| Rated Operating Pressure | 1500 PSI (103 bar) |
| Typical Internal Leakage (150 SSU) | Negligible |
| Viscosity Range | 36 to 3000 SSU (3 to 647 cSt) |
| Filtration | ISO 18/16/13 |
| Media Operating Temp. Range | -32° to 160°F (0° to 70°C) |
| Weight | .08 lbs (.03 kg) |
| Operating Fluid Media | General Purpose Hydraulic Fluid |
| Cartridge Torque Requirements | 15 ft-lbs (20.3 Nm) |
| Cavity | MINI 2W |
| Cavity Form Tool (Finishing) | 40500003 |
| Seal Kit | 21191000 |

**WARNING:** *the specifications/application data shown in our catalogs and data sheets are intended only as a general guide for the product described (herein). Any specific application should not be undertaken without independent study, evaluation, and testing for suitability.*



Via Malavolti, 36 - 41122 Modena - ITALY - Phone +39 (059) 254895 - Fax +39 (059) 253512 - mail: tecnord@tecnord.com - **www.tecnord.com**

## DIMENSIONS

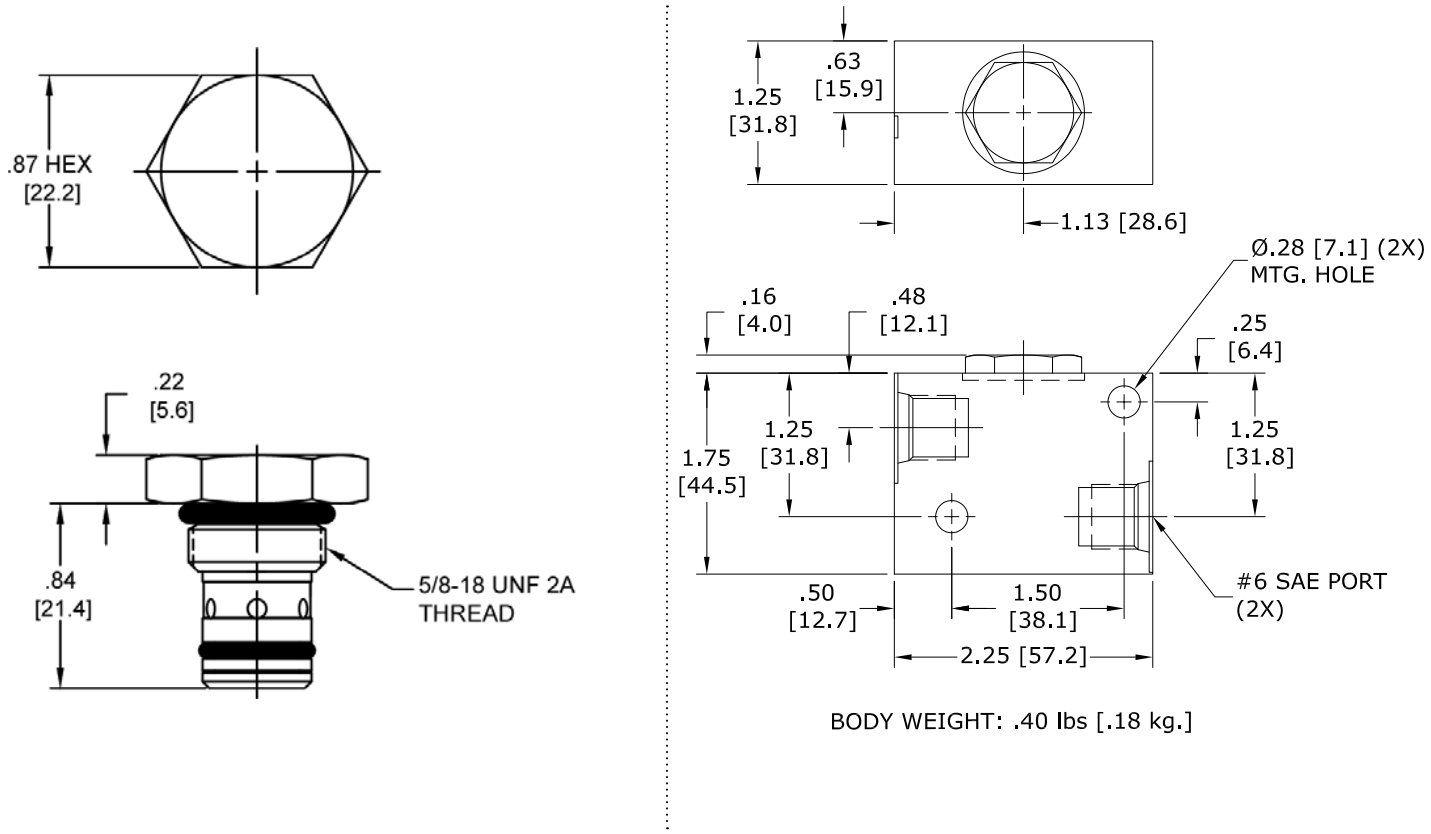


BODY WEIGHT: .40 lbs [.18 kg.]

*Body Weight: .29 lbs (.13 kg)*

## ORDERING INFORMATION

**MA-CVS** – ____ – ____ – ____

**OPTIONS**

| | |
|---|---|
| Buna Standard | **00** |
| Viton Standard | **V0** |

**CRACK PRESSURE**

| | |
|---|---|
| **0005** | 5 PSI |
| **0020** | 20 PSI |
| | ± 10% |

**BODIES**

| | |
|---|---|
| **Blank** | Without Body |
| **N** | 1/4" NPTF Ports |
| **S** | #6 SAE Ports |

**WARNING:** *the specifications/application data shown in our catalogs and data sheets are intended only as a general guide for the product described (herein). Any specific application should not be undertaken without independent study, evaluation, and testing for suitability.*



Via Malavolti, 36 - 41122 Modena - ITALY - Phone +39 (059) 254895 - Fax +39 (059) 253512 - mail: tecnord@tecnord.com - **www.tecnord.com**

## PB-CVS DIRECT ACTING CHECK VALVE, SOFT SEAT, POPPET

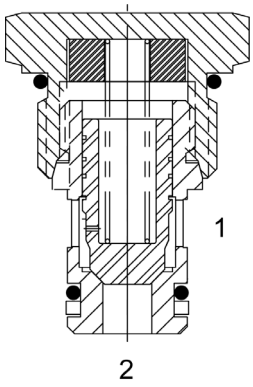


### DESCRIPTION

8 size, 3/4-16 thread, “Power” series, direct acting check valve, soft seat, poppet.

### OPERATION

The PB-CVS allows free flow passage from (2) to (1), and blocks flow from (1) to (2). The cartridge has a fully guided poppet, which is spring-biased closed, until sufficient pressure is applied at (2) to open to (1).

### FEATURES

- Soft seat for ultra low leakage.
- Optional bias springs for backpressure application flexibility.
- Fully guided poppet assembly.
- Industry common cavity.

### HYDRAULIC SYMBOL

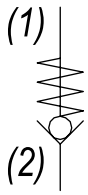


*Drop-in Pilot Pistons are NOT RECOMMENDED for this valve.*

### PERFORMANCE

Actual Test Data (Cartridge Only)

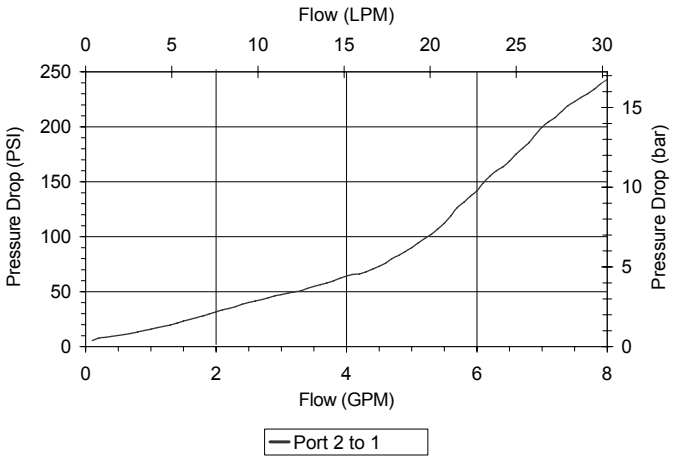


### VALVE SPECIFICATIONS

| | |
|---|---|
| Nominal Flow | 5 GPM (19 LPM) |
| Rated Operating Pressure | 3500 PSI (241 bar) |
| Typical Internal Leakage (150 SSU) | Negligible |
| Viscosity Range | 36 to 3000 SSU (3 to 647 cSt) |
| Filtration | ISO 18/16/13 |
| Media Operating Temp. Range | -32° to 120°F (0° to 49°C) |
| Weight | .09 lbs (.04 kg) |
| Operating Fluid Media | General Purpose Hydraulic Fluid |
| Cartridge Torque Requirements | 25 ft-lbs (34 Nm) |
| Cavity | POWER 2W |
| Cavity Form Tool (Finishing) | 40500005 |
| Seal Kit | 21191100 |

**WARNING:** *the specifications/application data shown in our catalogs and data sheets are intended only as a general guide for the product described (herein). Any specific application should not be undertaken without independent study, evaluation, and testing for suitability.*



Via Malavolti, 36 - 41122 Modena - ITALY - Phone +39 (059) 254895 - Fax +39 (059) 253512 - mail: tecnord@tecnord.com - **www.tecnord.com**

## DIMENSIONS

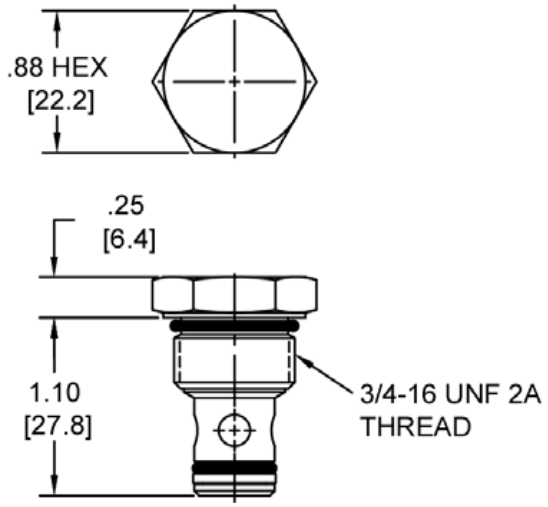


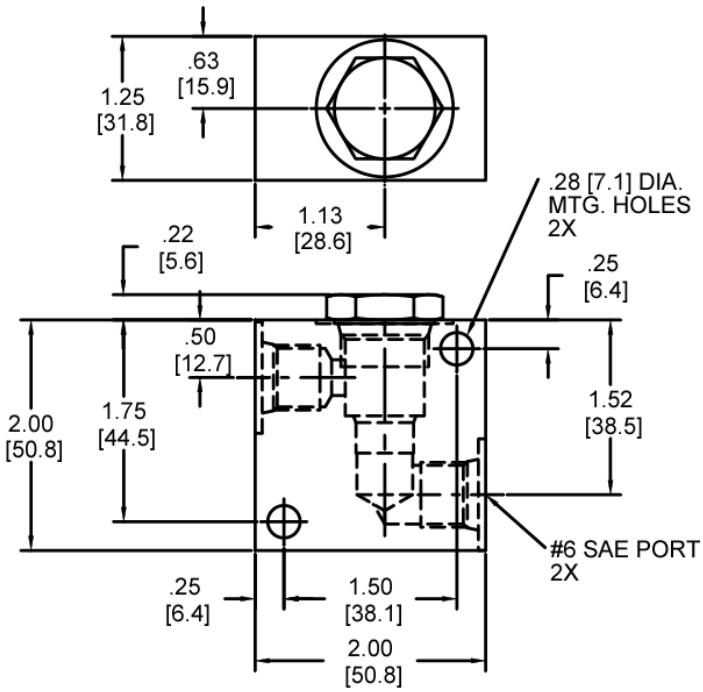


*Body Weight: .39 lbs (.18 kg)*

## ORDERING INFORMATION

**PB-CVS –** _____ **–** _____ **–** _____

**OPTIONS**
Buna Standard **00**
Viton Standard **V0**

**CRACK PRESSURE**
**0005** 5 PSI
**0020** 20 PSI
**0030** 30 PSI
**0050** 50 PSI
± 10%

**BODIES**
**Blank** Without Body
**N** 1/4" NPTF Ports
**S** #6 SAE Ports

**WARNING:** *the specifications/application data shown in our catalogs and data sheets are intended only as a general guide for the product described (herein). Any specific application should not be undertaken without independent study, evaluation, and testing for suitability.*

## DE-CVS DIRECT ACTING CHECK VALVE, SOFT SEAT, POPPET

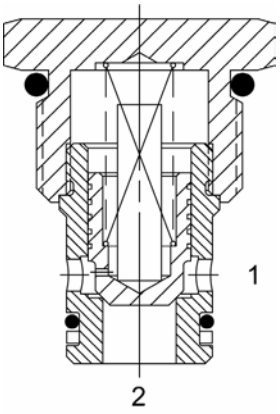


### DESCRIPTION

10 size, 7/8-14 thread, “Delta” series, soft seat check valve.

### OPERATION

The DE-CVS allows flow to pass from (2) to (1) and blocks flow from (1) to (2). The cartridge has a fully guided check poppet, which is spring-biased closed until sufficient pressure is applied at (2) to open to (1).

### FEATURES

- Soft seat for ultra low leakage.
- Industry common cavity.
- Optional bias springs for backpressure application flexibility.

### HYDRAULIC SYMBOL

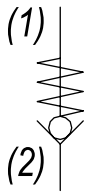


*Drop-In pilot pistons are NOT RECOMMENDED for this valve. If you would like to create P.O. Check Valve Function, please use the CVA valve and/or see the Hydraulic Integrated Circuits section for details.*

### PERFORMANCE

Actual Test Data (Cartridge Only)

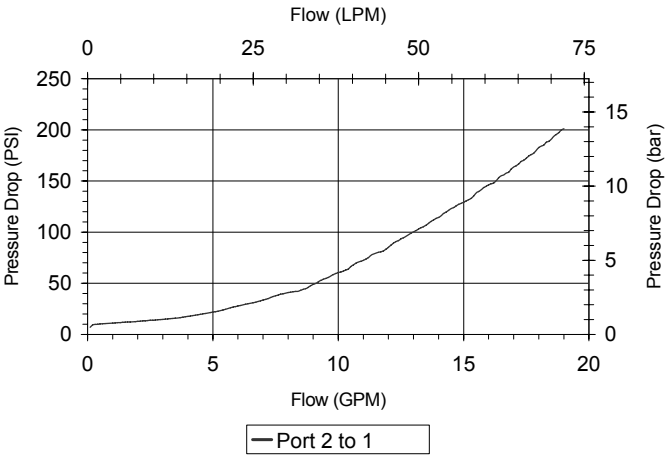


### VALVE SPECIFICATIONS

| | |
|---|---|
| Nominal Flow | 10 GPM (38 LTR/N) |
| Rated Operating Pressure | 1000 PSI (70 bar) |
| Typical Internal Leakage (150 SSU) | Negligible |
| Viscosity Range | 36 to 3000 SSU (3 to 647 cSt) |
| Filtration | ISO 18/16/13 |
| Media Operating Temp. Range | -32° to 160°F (0° to 70°C) |
| Weight | .14 lbs (.06 kg) |
| Operating Fluid Media | General Purpose Hydraulic Fluid |
| Cartridge Torque Requirements | 30 ft-lbs (40.6 Nm) |
| Cavity | DELTA 2W |
| Cavity Form Tool (Finishing) | 40500000 |
| Seal Kit | 21191200 |

**WARNING:** *the specifications/application data shown in our catalogs and data sheets are intended only as a general guide for the product described (herein). Any specific application should not be undertaken without independent study, evaluation, and testing for suitability.*



Via Malavolti, 36 - 41122 Modena - ITALY - Phone +39 (059) 254895 - Fax +39 (059) 253512 - mail: tecnord@tecnord.com - **www.tecnord.com**

## DIMENSIONS

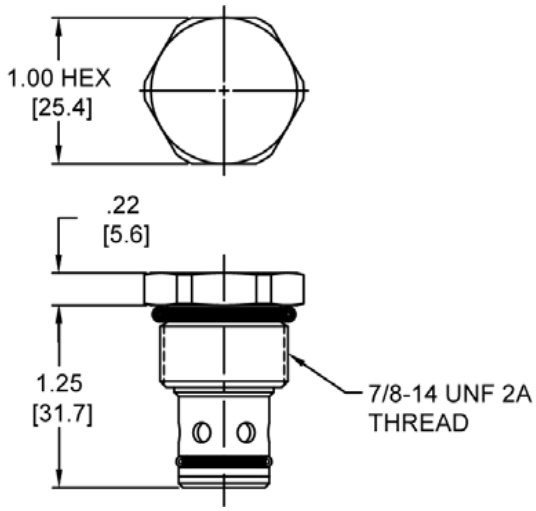


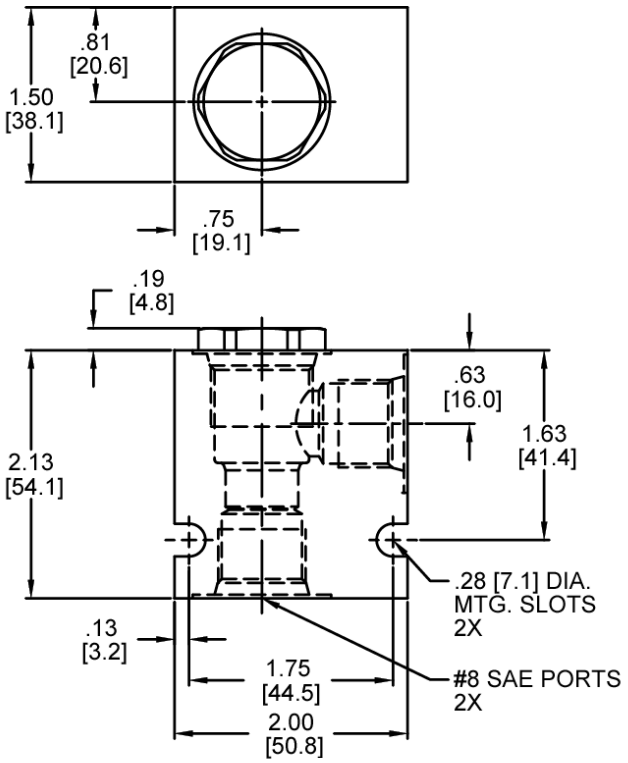


*Body Weight: .47 lbs (.21 kg)*

## ORDERING INFORMATION

**DE-CVS – ____ – ____ – ____**

**OPTIONS**

| | |
|---|---|
| Buna Standard | **00** |
| Viton Standard | **V0** |

**CRACK PRESSURE**

| | |
|---|---|
| **0010** | 10 PSI ± 15% |

**BODIES**

| | |
|---|---|
| **Blank** | Without Body |
| **N** | 3/8" NPTF Ports |
| **S** | #8 SAE Ports |

**WARNING:** *the specifications/application data shown in our catalogs and data sheets are intended only as a general guide for the product described (herein). Any specific application should not be undertaken without independent study, evaluation, and testing for suitability.*



Via Malavolti, 36 - 41122 Modena - ITALY - Phone +39 (059) 254895 - Fax +39 (059) 253512 - mail: tecnord@tecnord.com - **www.tecnord.com**

## DE-CVR REVERSE FLOW CHECK VALVE, POPPET

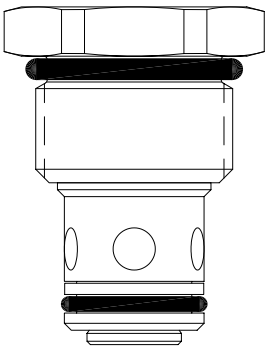

### DESCRIPTION

10 size, 7/8-14 thread, “Delta” series, reverse flow check valve.

### OPERATION

The DE-CVR allows free flow (1) to (2) and blocks flow from (2) to (1).

### FEATURES

- Hardened parts for long life and low leakage.
- Industry common cavity.
- Optional bias springs for backpressure application flexibility.

### HYDRAULIC SYMBOL

### PERFORMANCE

Actual Test Data (Cartridge Only)

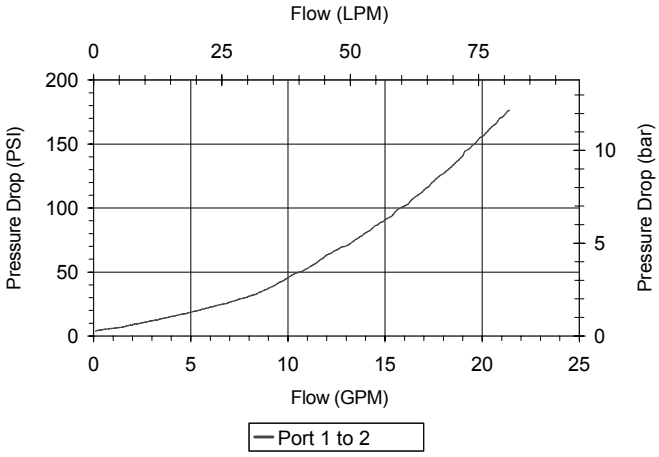


### VALVE SPECIFICATIONS

| | |
|---|---|
| Nominal Flow | 15 GPM (57 LPM) |
| Rated Operating Pressure | 3500 PSI (241 bar) |
| Typical Internal Leakage (150 SSU) | 0-5 drops/min |
| Viscosity Range | 36 to 3000 SSU (3 to 647 cSt) |
| Filtration | ISO 18/16/13 |
| Media Operating Temp. Range | -40° to 250°F (-40° to 120°C) |
| Weight | .15 lbs (.07 kg) |
| Operating Fluid Media | General Purpose Hydraulic Fluid |
| Cartridge Torque Requirements | 30 ft-lbs (40.6 Nm) |
| Cavity | DELTA 2W |
| Cavity Form Tool (Finishing) | 40500000 |
| Seal Kit | 21191204 |

**WARNING:** *the specifications/application data shown in our catalogs and data sheets are intended only as a general guide for the product described (herein). Any specific application should not be undertaken without independent study, evaluation, and testing for suitability.*



Via Malavolti, 36 - 41122 Modena - ITALY - Phone +39 (059) 254895 - Fax +39 (059) 253512 - mail: tecnord@tecnord.com - **www.tecnord.com**

## DIMENSIONS

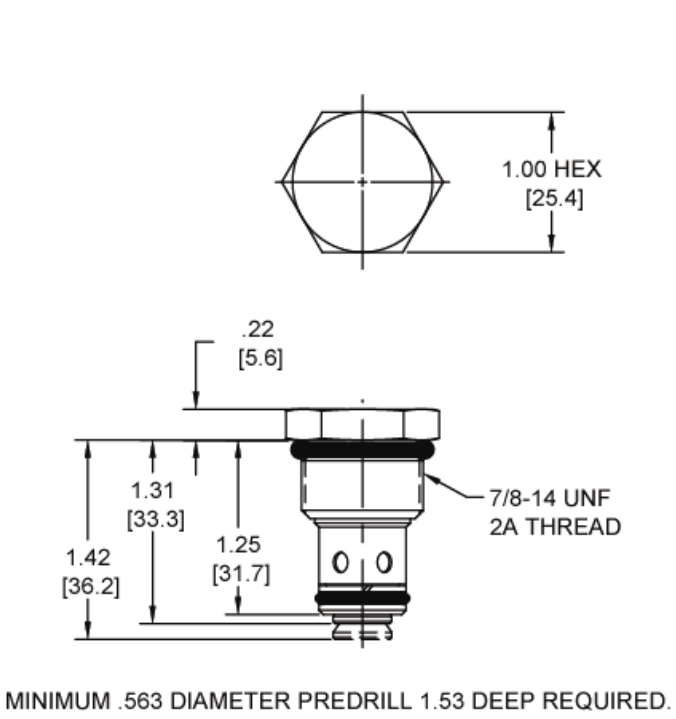


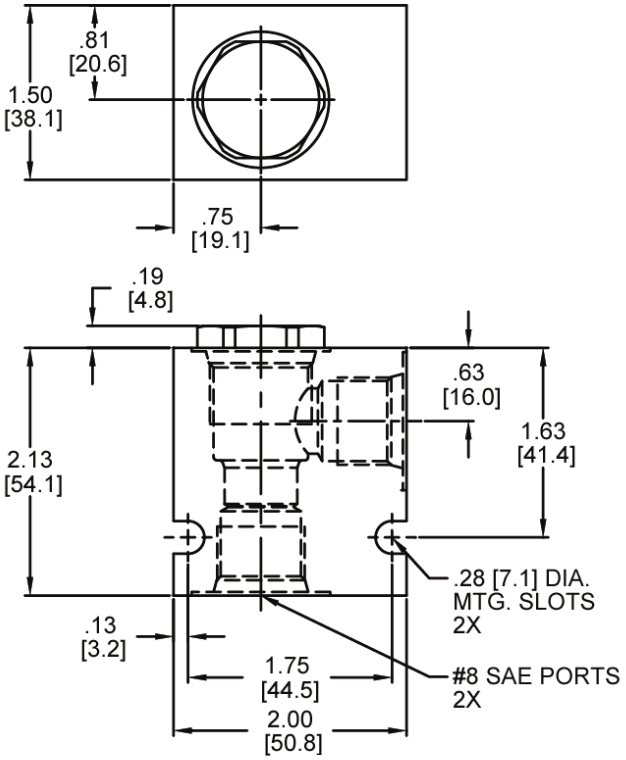


*Body Weight: .47 lbs (.21 kg)*

## ORDERING INFORMATION

**DE-CVR –** ____ **–** ____ **–** ____

**OPTIONS**

| | |
|---|---|
| Buna Standard | **00** |
| Viton Standard | **V0** |
| Buna & Screen | **A0** |
| Viton & Screen | **W0** |

**CRACK PRESSURE**

| | |
|---|---|
| **0005** | 5 PSI |
| **0025** | 25 PSI |
| | ± 10% |

**BODIES**

| | |
|---|---|
| **Blank** | Without Body |
| **N** | 3/8" NPTF Ports |
| **S** | #8 SAE Ports |

**WARNING:** *the specifications/application data shown in our catalogs and data sheets are intended only as a general guide for the product described (herein). Any specific application should not be undertaken without independent study, evaluation, and testing for suitability.*



Via Malavolti, 36 - 41122 Modena - ITALY - Phone +39 (059) 254895 - Fax +39 (059) 253512 - mail: tecnord@tecnord.com - **www.tecnord.com**

## HT-CVR REVERSE FLOW CHECK VALVE, POPPET

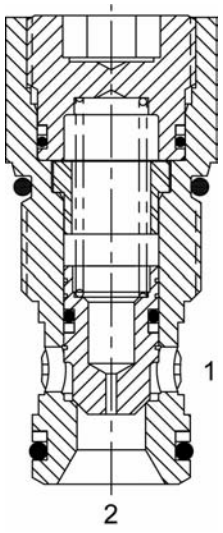


### DESCRIPTION

"High Pressure" 12 size, 1 1/16-12 thread, "Tecnord" series, reverse flow check valve.

### OPERATION

The HT-CVR allows free flow from (1) to (2) and blocks flow from (2) to (1). The cartridge has a fully guided poppet, which is spring biased closed, until sufficient pressure is applied at (1) to open to (2).

### FEATURES

- Hardened parts for long life and low leakage.
- Industry common cavity.
- Optional bias springs for backpressure application flexibility.

### HYDRAULIC SYMBOL

### PERFORMANCE

Actual Test Data (Cartridge Only)

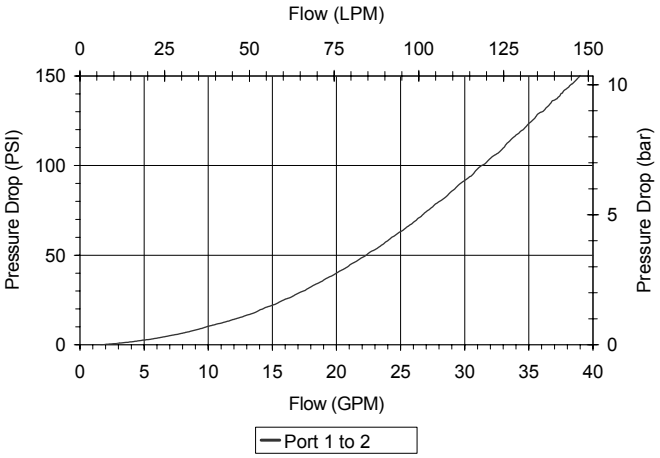


### VALVE SPECIFICATIONS

| | |
|---|---|
| Nominal Flow | 35 GPM (132 LPM) |
| Rated Operating Pressure | 5000 PSI (345 bar) |
| Typical Internal Leakage (150 SSU) | 0-8 drops/min |
| Viscosity Range | 36 to 3000 SSU (3 to 647 cSt) |
| Filtration | ISO 18/16/13 |
| Media Operating Temp. Range | -40° to 250°F (-40° to 120°C) |
| Weight | .55 lbs (.25 kg) |
| Operating Fluid Media | General Purpose Hydraulic Fluid |
| Cartridge Torque Requirements | 70 ft-lbs (95 Nm) |
| Cavity | TECNORD 2W |
| Cavity Form Tool (Finishing) | 40500032 |
| Seal Kit | 21191300 |

**WARNING:** *the specifications/application data shown in our catalogs and data sheets are intended only as a general guide for the product described (herein). Any specific application should not be undertaken without independent study, evaluation, and testing for suitability.*



Via Malavolti, 36 - 41122 Modena - ITALY - Phone +39 (059) 254895 - Fax +39 (059) 253512 - mail: tecnord@tecnord.com - **www.tecnord.com**

## DIMENSIONS

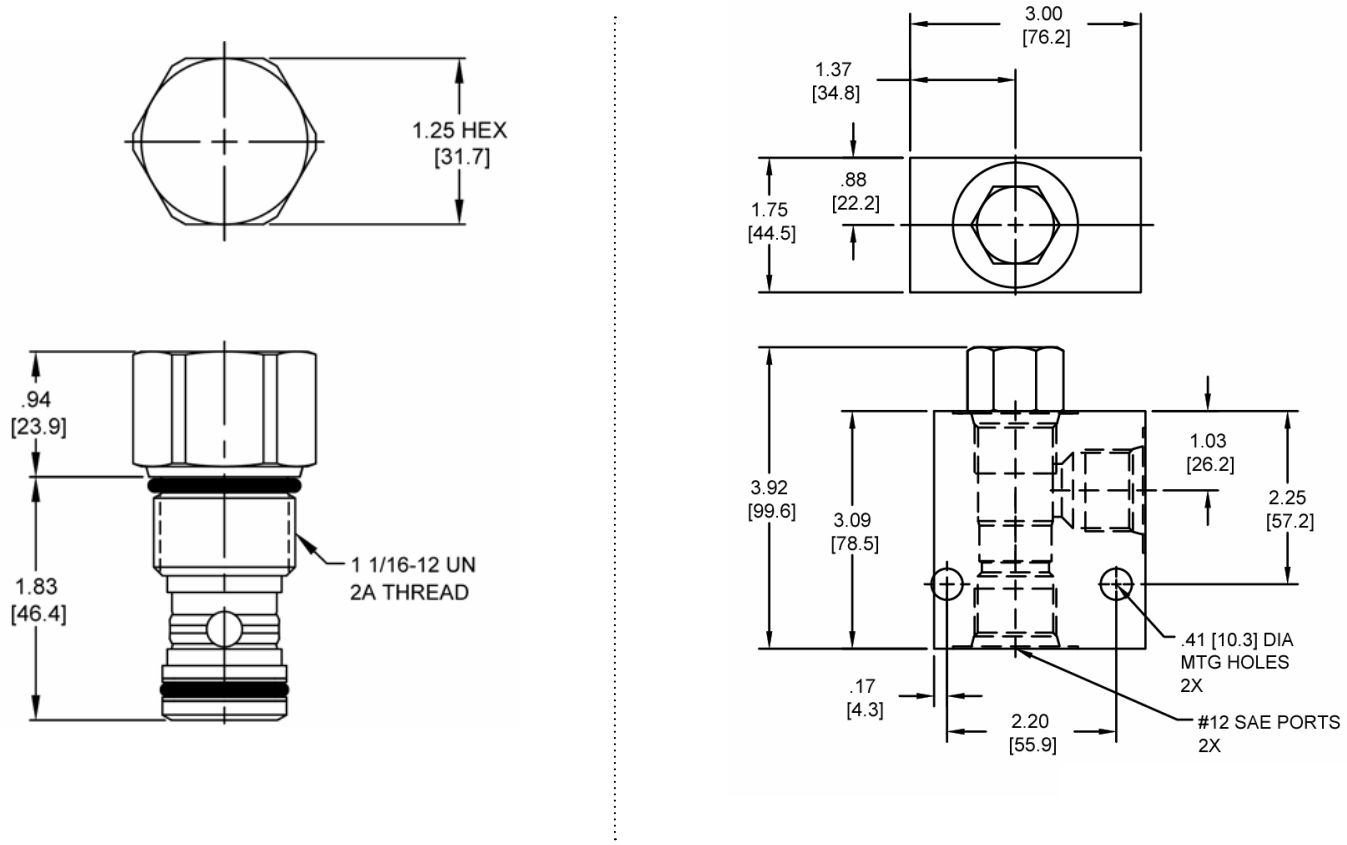


*Body Weight: 3.71 lbs (1.68 kg)*

## ORDERING INFORMATION

**HT-CVR – ____ – ____ – ____**

**OPTIONS**

| | |
|---|---|
| Buna Standard | **00** |
| Viton Standard | **V0** |

**CRACK PRESSURE**

| | |
|---|---|
| **0010** | 10 PSI |
| **0030** | 30 PSI |
| **0050** | 50 PSI |
| | ± 10% |

**BODIES**

| | |
|---|---|
| **Blank** | Without Body |
| **S** | #12 SAE Ports |

**WARNING:** *the specifications/application data shown in our catalogs and data sheets are intended only as a general guide for the product described (herein). Any specific application should not be undertaken without independent study, evaluation, and testing for suitability.*



Via Malavolti, 36 - 41122 Modena - ITALY - Phone +39 (059) 254895 - Fax +39 (059) 253512 - mail: tecnord@tecnord.com - **www.tecnord.com**

**WARNING:** *the specifications/application data shown in our catalogs and data sheets are intended only as a general guide for the product described (herein). Any specific application should not be undertaken without independent study, evaluation, and testing for suitability.*



Via Malavolti, 36 - 41122 Modena - ITALY - Phone +39 (059) 254895 - Fax +39 (059) 253512 - mail: tecnord@tecnord.com - **www.tecnord.com**

## PILOT TO OPEN AND DOUBLE PO CHECK VALVES

| PILOT TO OPEN CHECK VALVES | GPM | PSI | LPM | BAR | CAVITY | MODEL | PAGE |
|---|---|---|---|---|---|---|---|
| 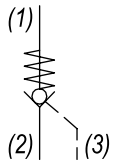 | 6 | 3500 | 23 | 241 | 3/4-16 | **PP-CPB** | MD38 |
| | 8 | 3500 | 30 | 241 | 7/8-14 | **DF-CPB** | MD40 |
| | 10 | 3500 | 38 | 241 | 7/8-14 | **DF-CPC** | MD42 |

| DOUBLE PO CHECK VALVES | GPM | PSI | LPM | BAR | CAVITY | MODEL | PAGE |
|---|---|---|---|---|---|---|---|
| 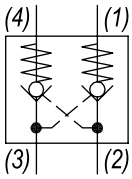 | 5 | 3000 | 19 | 207 | 3/4-16 | **PQ-CDP** | MD44 |
| | 8 | 3000 | 30 | 207 | 7/8-14 | **DG-CDP** | MD46 |

| PILOT TO CLOSE CHECK VALVES | GPM | PSI | LPM | BAR | CAVITY | MODEL | PAGE |
|---|---|---|---|---|---|---|---|
| 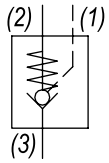 | 10 | 3500 | 38 | 241 | 7/8-14 | **DF-CPD** | MD48 |
| | 20 | 3500 | 76 | 241 | 1 5/16-12 | **SL-CPD** | MD50 |

| CHECK VALVES WITH THERMAL RELIEF | GPM | PSI | LPM | BAR | CAVITY | MODEL | PAGE |
|---|---|---|---|---|---|---|---|
| 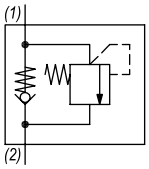 | 15 | 4000 | 57 | 276 | 7/8-14 | **DE-CVT** | MD52 |

**WARNING:** *the specifications/application data shown in our catalogs and data sheets are intended only as a general guide for the product described (herein). Any specific application should not be undertaken without independent study, evaluation, and testing for suitability.*

## PP-CPB PILOT OPERATED CHECK VALVE, GUIDED BALL

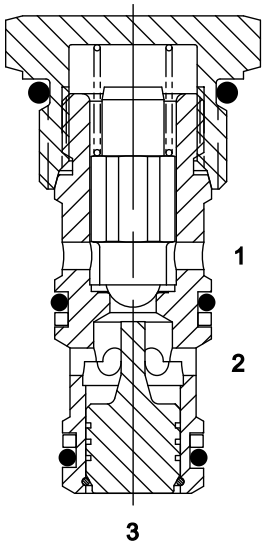


### DESCRIPTION

8 size, 3/4-16 thread, “Power” series, pilot operated, ball check valve.

### OPERATION

The PP-CPB allows free flow to pass from (2) to (1) and blocks flow from (1) to (2). When pilot pressure is applied to port (3) the valve allows free flow from (1) to (2).

### FEATURES

- Hardened parts for long life.
- Industry common cavity.

### HYDRAULIC SYMBOL

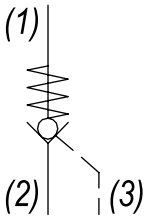


*For sealed pilot piston consult factory.*

### PERFORMANCE

Actual Test Data (Cartridge Only)

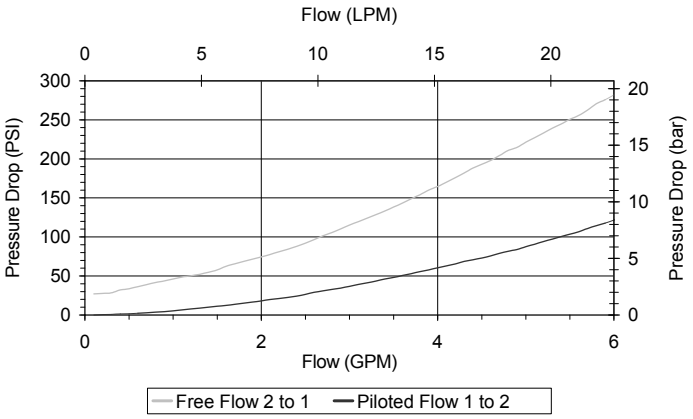


### VALVE SPECIFICATIONS

| | |
|---|---|
| Nominal Flow | 6 GPM (23 LTR/M) from (1) to (2)<br>4 GPM (15 LTR/M) from (2) to (1) |
| Rated Operating Pressure | 3500 PSI (241 bar) |
| Typical Internal Leakage (150 SSU) | 0-5 drops/min |
| Pilot Ratio | 4:1 |
| Viscosity Range | 36 to 3000 SSU (3 to 647 cSt) |
| Filtration | ISO 18/16/13 |
| Media Operating Temp. Range | -40° to 250°F (-40° to 120°C) |
| Weight | .14 lbs (.06 kg) |
| Operating Fluid Media | General Purpose Hydraulic Fluid |
| Cartridge Torque Requirements | 25 ft-lbs (34 Nm) |
| Cavity | POWER 3W |
| Cavity Form Tool (Finishing) | 40500024 |
| Seal Kit | 21191108 |

**WARNING:** *the specifications/application data shown in our catalogs and data sheets are intended only as a general guide for the product described (herein). Any specific application should not be undertaken without independent study, evaluation, and testing for suitability.*



Via Malavolti, 36 - 41122 Modena - ITALY - Phone +39 (059) 254895 - Fax +39 (059) 253512 - mail: tecnord@tecnord.com - **www.tecnord.com**

## DIMENSIONS

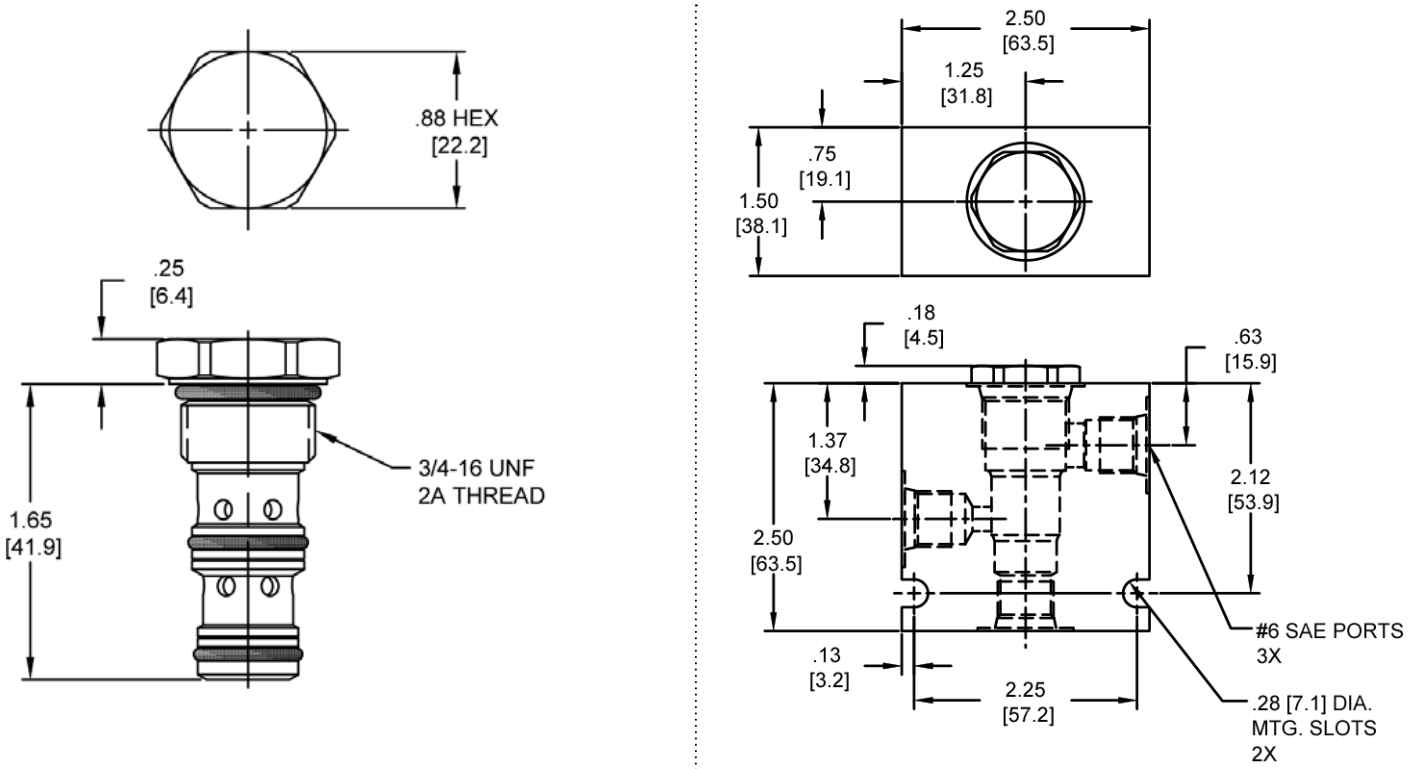


## ORDERING INFORMATION

**PP-CPB – ____ – ____ – ____**

**OPTIONS**

| | |
|---|---|
| Buna Standard | **00** |
| Viton Standard | **V0** |

**CRACK PRESSURE**

| | |
|---|---|
| **0025** | 25 PSI ± 10% |

**BODIES**

| | |
|---|---|
| **Blank** | Without Body |
| **N** | 1/4” NPTF Ports |
| **S** | #6 SAE Ports |

**WARNING:** *the specifications/application data shown in our catalogs and data sheets are intended only as a general guide for the product described (herein). Any specific application should not be undertaken without independent study, evaluation, and testing for suitability.*



Via Malavolti, 36 - 41122 Modena - ITALY - Phone +39 (059) 254895 - Fax +39 (059) 253512 - mail: tecnord@tecnord.com - **www.tecnord.com**

## DF-CPB PILOT OPERATED CHECK VALVE, GUIDED BALL

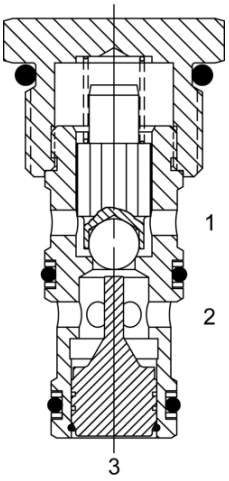


### DESCRIPTION

10 size, 7/8-14 thread, “Delta” series, pilot operated, ball check valve.

### OPERATION

The DF-CPB allows free flow to pass from (2) to (1) and blocks flow from (1) to (2). When pilot pressure is applied to port (3) the valve allows free flow from (1) to (2).

### FEATURES

- Hardened parts for long life.
- Industry common cavity.

### HYDRAULIC SYMBOL

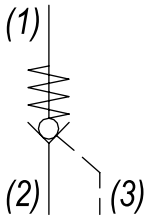


*For sealed pilot piston consult factory. 0.030″ to 0.060″ diameter orifice recommended in the feed line to port #3.*

### PERFORMANCE

Actual Test Data (Cartridge Only)

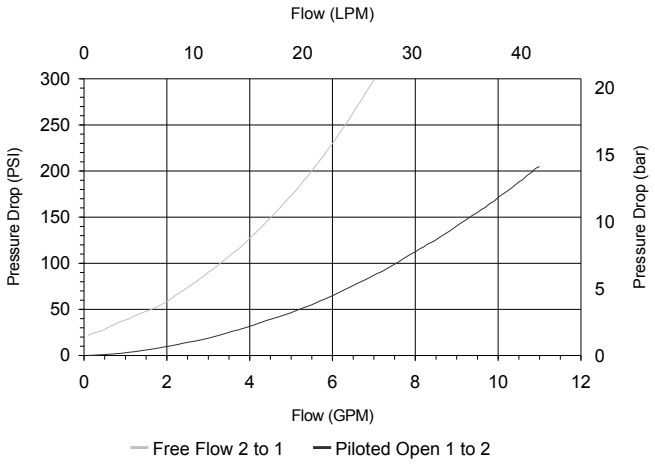


### VALVE SPECIFICATIONS

| | |
|---|---|
| Nominal Flow | 8 GPM (30 LTR/M) from (1) to (2)<br>5 GPM (19 LTR/M) from (2) to (1) |
| Rated Operating Pressure | 3500 PSI (241 bar) |
| Typical Internal Leakage (150 SSU) | 0-5 drops/min |
| Pilot Ratio | 4:1 |
| Viscosity Range | 36 to 3000 SSU (3 to 647 cSt) |
| Filtration | ISO 18/16/13 |
| Media Operating Temp. Range | -40° to 250°F (-40° to 120°C) |
| Weight | .19 lbs (.09 kg) |
| Operating Fluid Media | General Purpose Hydraulic Fluid |
| Cartridge Torque Requirements | 30 ft-lbs (40.6 Nm) |
| Cavity | DELTA 3W |
| Cavity Form Tool (Finishing) | 40500001 |
| Seal Kit | 21191202 |

**WARNING:** *the specifications/application data shown in our catalogs and data sheets are intended only as a general guide for the product described (herein). Any specific application should not be undertaken without independent study, evaluation, and testing for suitability.*



Via Malavolti, 36 - 41122 Modena - ITALY - Phone +39 (059) 254895 - Fax +39 (059) 253512 - mail: tecnord@tecnord.com - **www.tecnord.com**

## DIMENSIONS

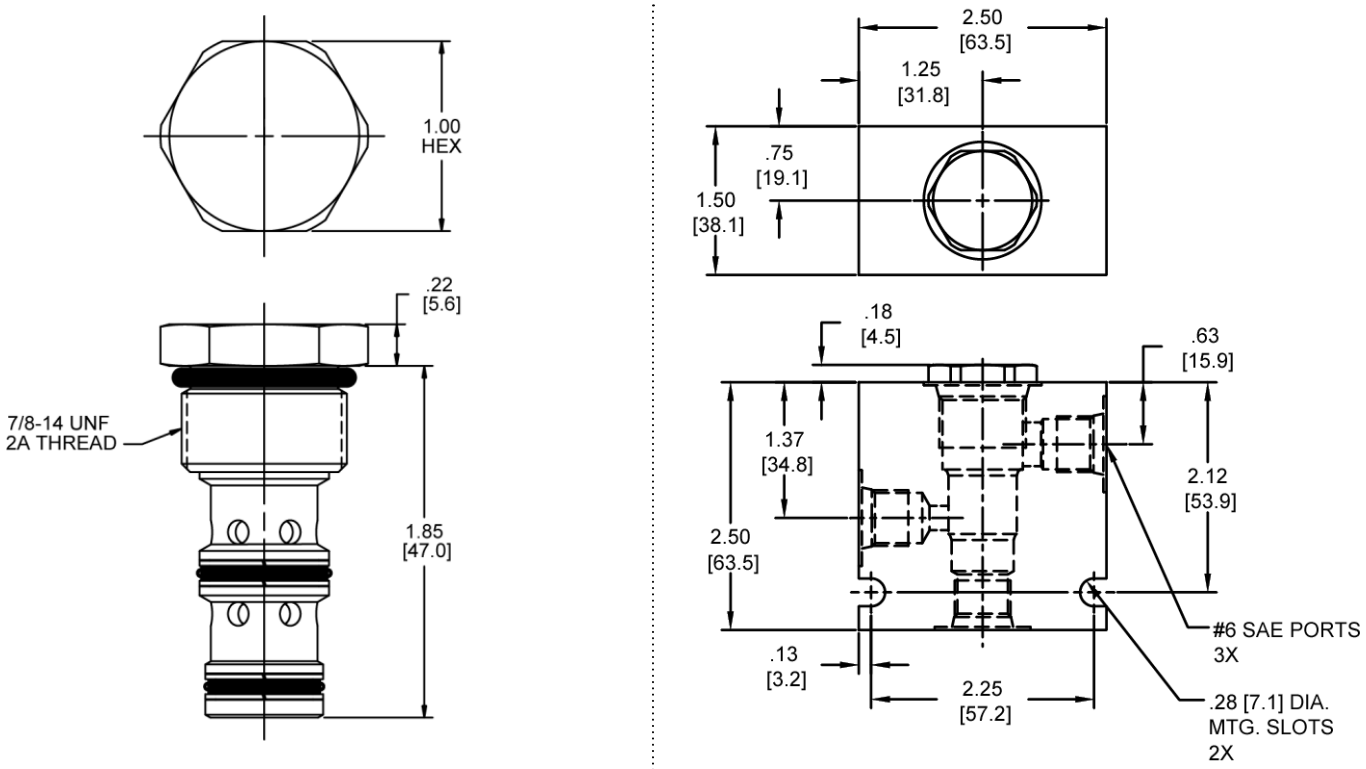


## ORDERING INFORMATION

**DF-CPB – ____ – ____ – ____**

**OPTIONS**

| | |
|---|---|
| Buna Standard | **00** |
| Viton Standard | **V0** |

**CRACK PRESSURE**

| | |
|---|---|
| **0025** | 25 PSI ± 10% |

**BODIES**

| | |
|---|---|
| **Blank** | Without Body |
| **N** | 3/8” NPTF Ports |
| **S** | #6 SAE Ports |

**WARNING:** *the specifications/application data shown in our catalogs and data sheets are intended only as a general guide for the product described (herein). Any specific application should not be undertaken without independent study, evaluation, and testing for suitability.*

## DF-CPC PILOT TO OPEN, CHECK VALVE, GUIDED BALL

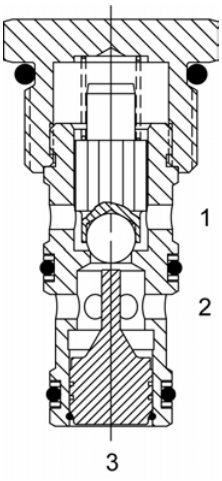


### DESCRIPTION

10 size, 7/8-14 thread, “Delta” series, pilot to open, ball check valve.

### OPERATION

The DF-CPC allows free flow to pass from (2) to (1) and blocks flow from (1) to (2). When pilot pressure is applied to port (3) the valve allows free flow from (1) to (2). The cartridge has a 2:1 pilot ratio, meaning that at least one half of the load pressure held at (1) is required at (3) to open the valve. The check is spring biased to assure holding in static or no-load conditions.

### FEATURES

- Hardened parts for long life.
- Industry common cavity.

### HYDRAULIC SYMBOL

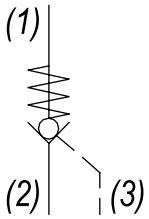


*Special higher bias spring values available. Consult factory. For sealed pilot piston consult factory.*

### PERFORMANCE

Actual Test Data (Cartridge Only)

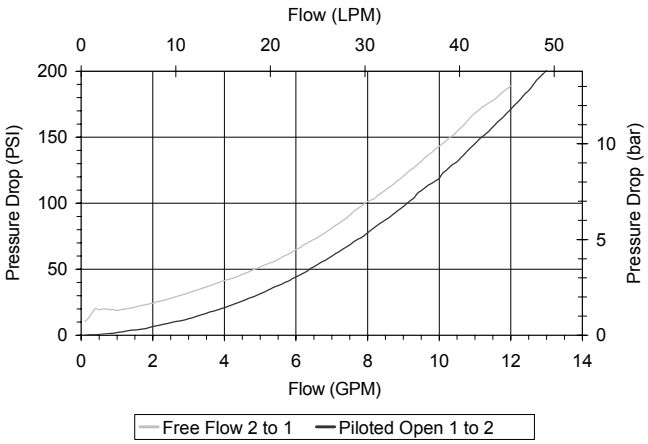


### VALVE SPECIFICATIONS

| | |
|---|---|
| Nominal Flow | 10 GPM (38 LPM) |
| Rated Operating Pressure | 3500 PSI (241 bar) |
| Typical Internal Leakage (150 SSU) | 0-5 drops/min |
| Pilot Ratio | 2:1 |
| Viscosity Range | 36 to 3000 SSU (3 to 647 cSt) |
| Filtration | ISO 18/16/13 |
| Media Operating Temp. Range | -40° to 250°F (-40° to 120°C) |
| Weight | .19 lbs (.09 kg) |
| Operating Fluid Media | General Purpose Hydraulic Fluid |
| Cartridge Torque Requirements | 30 ft-lbs (40.6 Nm) |
| Cavity | DELTA 3W |
| Cavity Form Tool (Finishing) | 40500001 |
| Seal Kit | 21191202 |

**WARNING:** *the specifications/application data shown in our catalogs and data sheets are intended only as a general guide for the product described (herein). Any specific application should not be undertaken without independent study, evaluation, and testing for suitability.*



Via Malavolti, 36 - 41122 Modena - ITALY - Phone +39 (059) 254895 - Fax +39 (059) 253512 - mail: tecnord@tecnord.com - **www.tecnord.com**

## DIMENSIONS

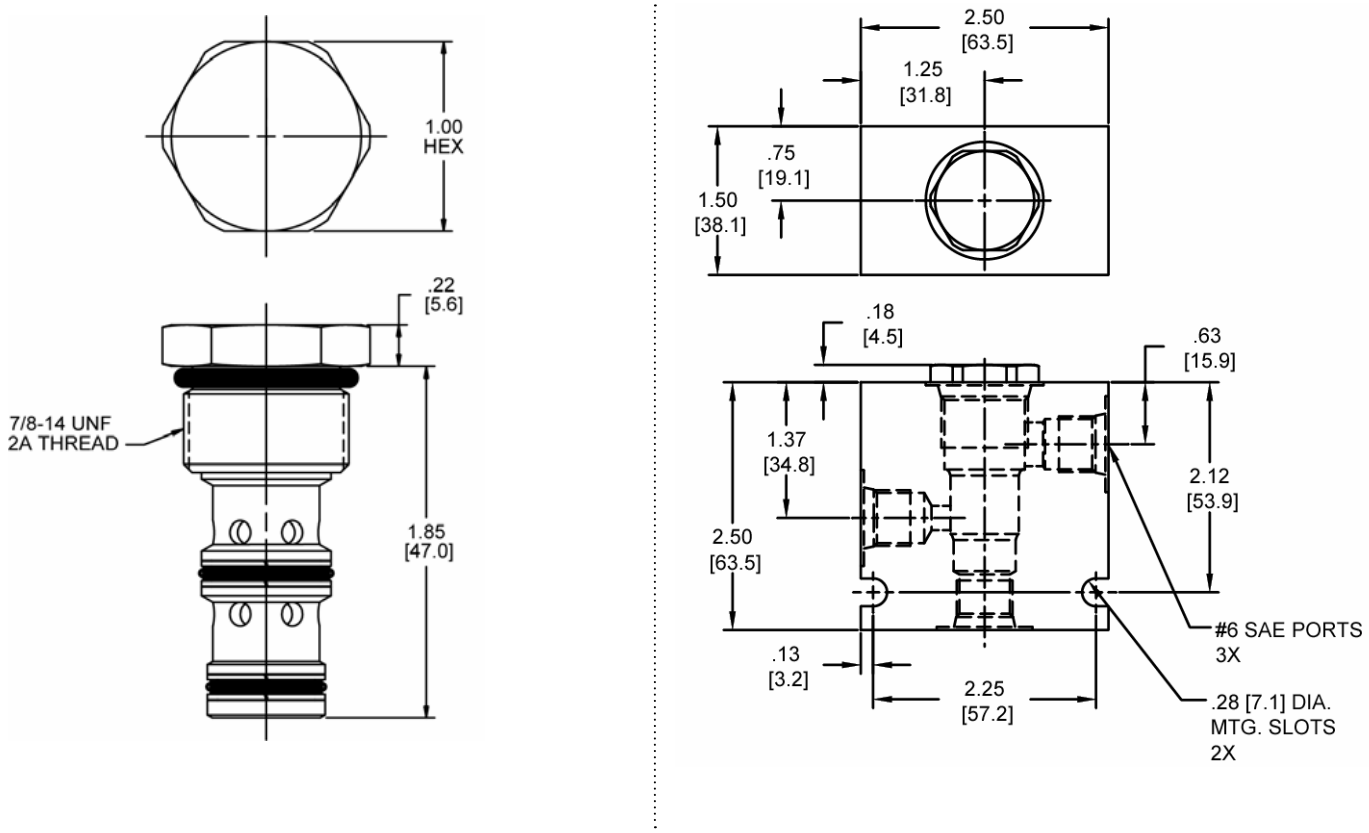


## ORDERING INFORMATION

**DF-CPC – ____ – ____ – ____**

**OPTIONS**

| | |
|---|---|
| Buna Standard | **00** |
| Viton Standard | **V0** |

**CRACK PRESSURE**

| | |
|---|---|
| **0025** | 25 PSI ± 10% |

**BODIES**

| | |
|---|---|
| **Blank** | Without Body |
| **N** | 1/4" NPTF Ports |
| **S** | #6 SAE Ports |

**WARNING:** *the specifications/application data shown in our catalogs and data sheets are intended only as a general guide for the product described (herein). Any specific application should not be undertaken without independent study, evaluation, and testing for suitability.*



Via Malavolti, 36 - 41122 Modena - ITALY - Phone +39 (059) 254895 - Fax +39 (059) 253512 - mail: tecnord@tecnord.com - **www.tecnord.com**

## PQ-CDP DOUBLE PILOT OPERATED CHECK VALVE

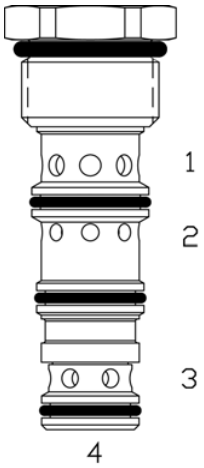


### DESCRIPTION

8 size, 3/4-16 thread, “Power” series, double pilot operated check valve.

### OPERATION

The PQ-CDP allows flow to pass from (3) to (4) and (2) to (1). The valve blocks flow from (4) to (3) and from (1) to (2). Blocked flow is released when pilot pressure is applied to the port opposite of (3) and/or (2) respectively. The valve has a 3:1 pilot ratio, so at least 1/3 of the load pressure at port (4) or (1) is required at the pilot line ports “ports (4) or (1) respectively” to open the flow passage to allow flow from port (4) or (1) respectively. The check spring biased at 20 PSI (1.4 bar) to assure holding in the static or no-load conditions.

### FEATURES

- Hardened parts for long life.
- Industry common cavity.

*Great for “in Cylinder” use application.*

## PERFORMANCE

Actual Test Data (Cartridge Only)

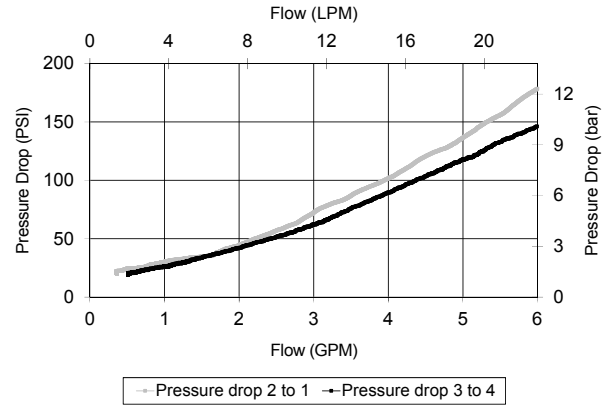


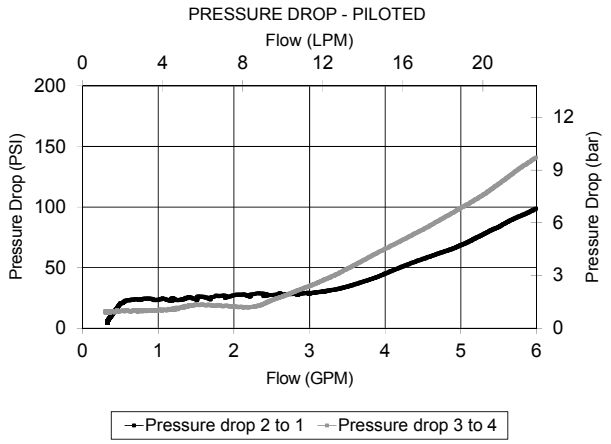


## HYDRAULIC SYMBOL

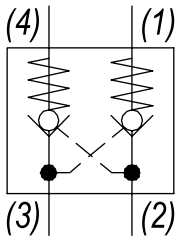


## VALVE SPECIFICATIONS

| | |
|---|---|
| Nominal Flow | 5 GPM (19 LPM) |
| Rated Operating Pressure | 3000 PSI (207 bar) |
| Typical Internal Leakage (150 SSU) | 0-5 drops/min |
| Viscosity Range | 36 to 3000 SSU (3 to 647 cSt) |
| Filtration | ISO 18/16/13 |
| Media Operating Temp. Range | -40° to 250°F (-40° to 120°C) |
| Weight | .12 lbs (.05 kg) |
| Operating Fluid Media | General Purpose Hydraulic Fluid |
| Cartridge Torque Requirements | 25 ft-lbs (34 Nm) |
| Cavity | POWER 4W |
| Cavity Form Tool (Finishing) | 40500029 |
| Seal Kit | 21191112 |

**WARNING:** *the specifications/application data shown in our catalogs and data sheets are intended only as a general guide for the product described (herein). Any specific application should not be undertaken without independent study, evaluation, and testing for suitability.*



Via Malavolti, 36 - 41122 Modena - ITALY - Phone +39 (059) 254895 - Fax +39 (059) 253512 - mail: tecnord@tecnord.com - **www.tecnord.com**

## DIMENSIONS

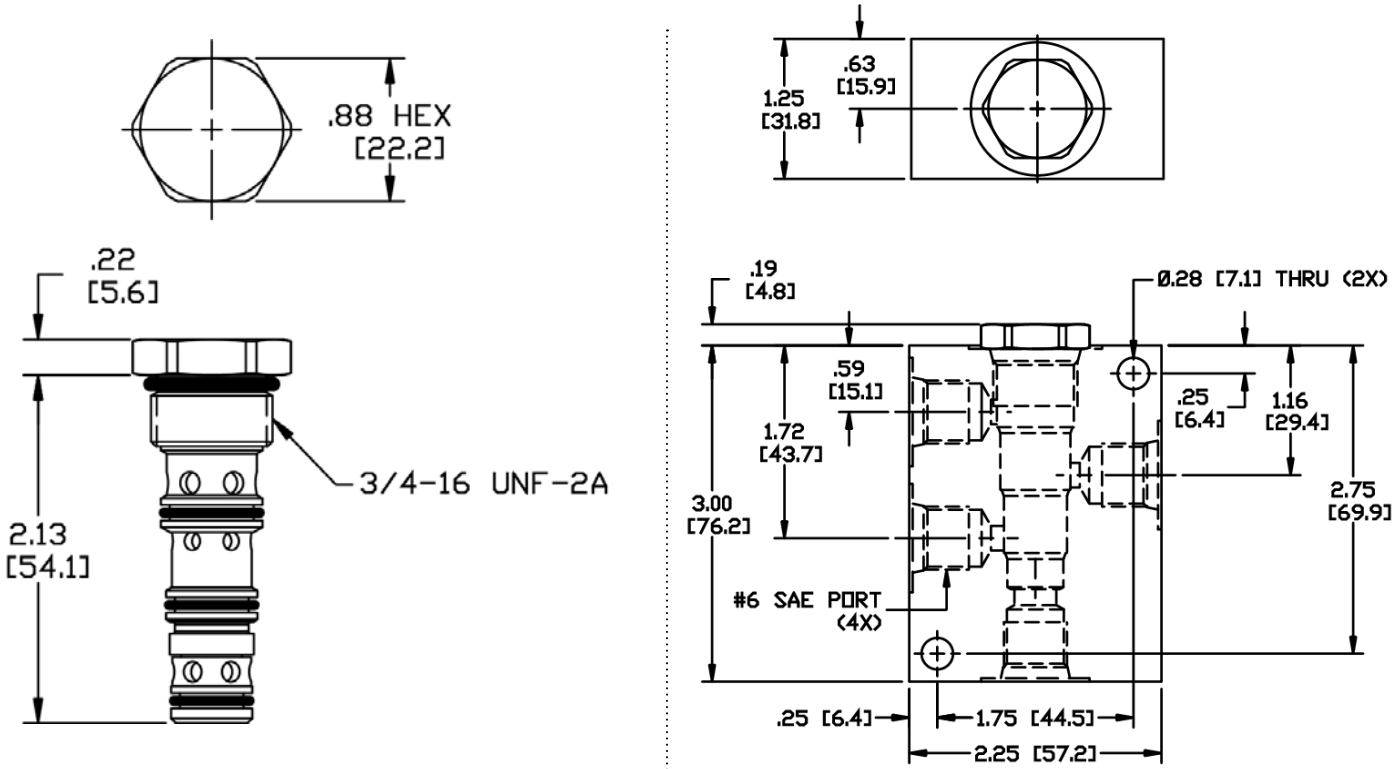


## ORDERING INFORMATION

**PQ-CDP** – ____ – ____ – ____

**OPTIONS**
Urethane Standard **U0**

**SPRING BIAS**
**0020** 20 PSI

**BODIES**
**Blank** Without Body
**N** 1/4" NPTF Ports
**S** #6 SAE Ports

**WARNING:** *the specifications/application data shown in our catalogs and data sheets are intended only as a general guide for the product described (herein). Any specific application should not be undertaken without independent study, evaluation, and testing for suitability.*



Via Malavolti, 36 - 41122 Modena - ITALY - Phone +39 (059) 254895 - Fax +39 (059) 253512 - mail: tecnord@tecnord.com - **www.tecnord.com**

## DG-CDP DOUBLE PILOT OPERATED CHECK VALVE

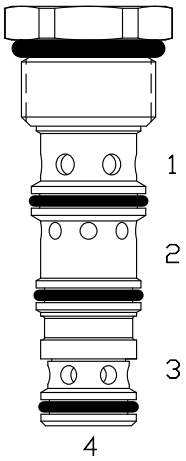


### DESCRIPTION

10 size, 7/8 -14 thread, “Delta” series, double pilot operated check valve.

### OPERATION

The DG-CDP allows flow to pass from (3) to (4) and (2) to (1). The valve blocks flow from (4) to (3) and from (1) to (2). Blocked flow is released when pilot pressure is applied to the port opposite of (3) and/or (2) respectively. The valve has a 3:1 pilot ratio, so at least 1/3 of the load pressure at port (4) or (1) is required at the pilot line ports “ports (4) or (1) respectively” to open the flow passage to allow flow from port (4) or (1) respectively. The check spring biased at 20 PSI (1.4 bar) to assure holding in the static or no-load conditions.

### FEATURES

- Hardened parts for long life.
- Industry common cavity.

*Great for “in Cylinder” use application.*

### PERFORMANCE

Actual Test Data (Cartridge Only)

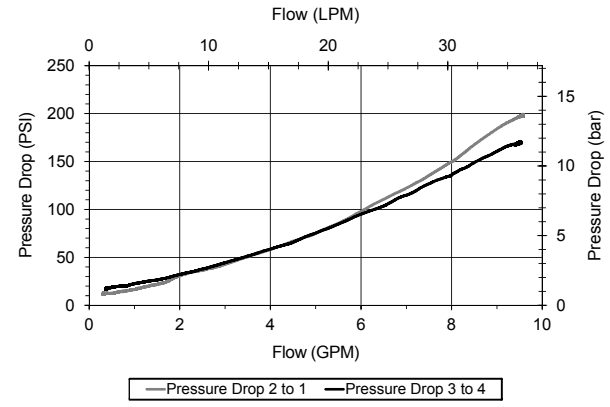


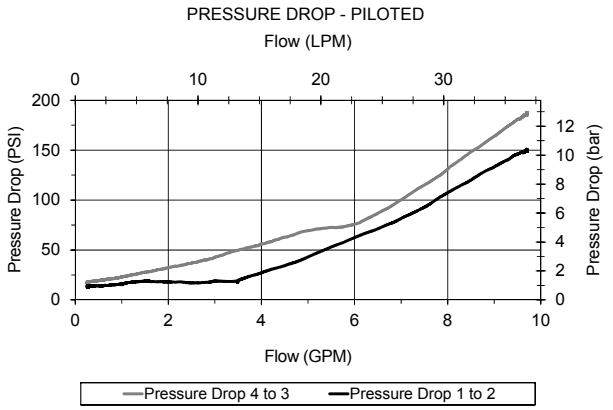


### HYDRAULIC SYMBOL

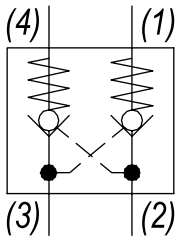


### VALVE SPECIFICATIONS

| | |
|---|---|
| Nominal Flow | 8 GPM (30 LPM) |
| Rated Operating Pressure | 3000 PSI (207 bar) |
| Typical Internal Leakage (150 SSU) | 0-5 drops/min |
| Viscosity Range | 36 to 3000 SSU (3 to 647 cSt) |
| Filtration | ISO 18/16/13 |
| Media Operating Temp. Range | -40° to 250°F (-40° to 120°C) |
| Weight | .20 lbs (.09 kg) |
| Operating Fluid Media | General Purpose Hydraulic Fluid |
| Cartridge Torque Requirements | 30 ft-lbs (40.6 Nm) |
| Cavity | DELTA 4W |
| Cavity Form Tool (Finishing) | 40500002 |
| Seal Kit | 21191216 |

**WARNING:** *the specifications/application data shown in our catalogs and data sheets are intended only as a general guide for the product described (herein). Any specific application should not be undertaken without independent study, evaluation, and testing for suitability.*



Via Malavolti, 36 - 41122 Modena - ITALY - Phone +39 (059) 254895 - Fax +39 (059) 253512 - mail: tecnord@tecnord.com - **www.tecnord.com**

## DIMENSIONS

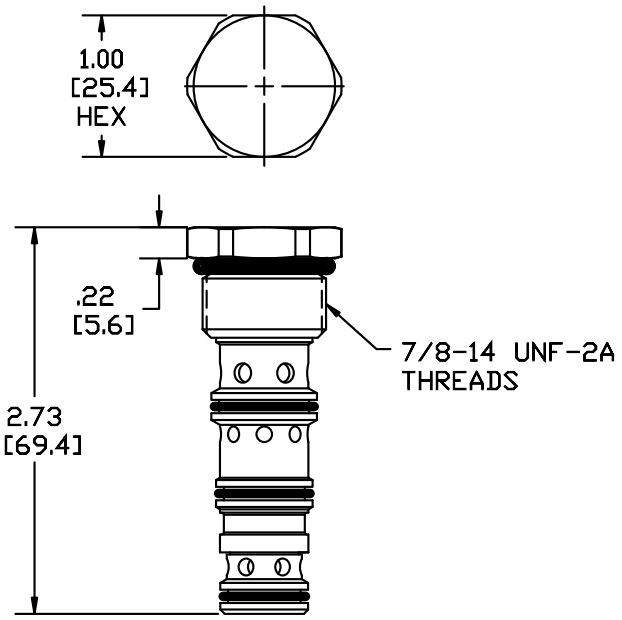


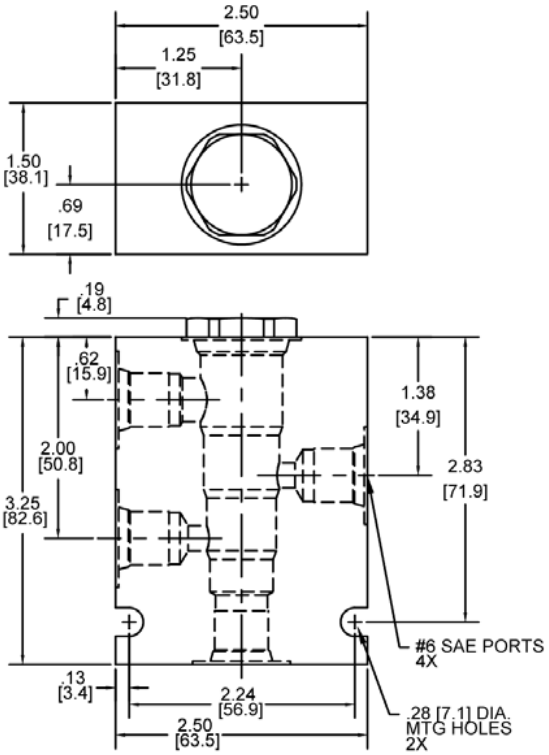


*Body Weight: .99 lbs (.45 kg)*

## ORDERING INFORMATION

**DG-CDP** – _____ – _____ – _____

**OPTIONS**
Urethane Standard **U0**

**SPRING BIAS**
**0020** 20 PSI

**BODIES**
**Blank** Without Body
**N** 1/4" NPTF Ports
**S** #6 SAE Ports

**WARNING:** *the specifications/application data shown in our catalogs and data sheets are intended only as a general guide for the product described (herein). Any specific application should not be undertaken without independent study, evaluation, and testing for suitability.*

## DF-CPD PILOT TO CLOSE CHECK VALVE, GUIDED BALL

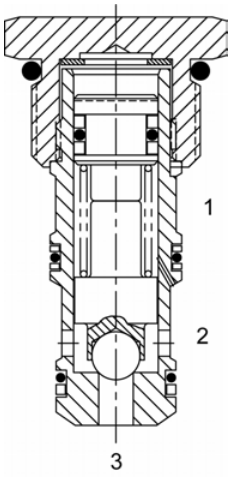


### DESCRIPTION

10 size, 7/8-14 thread, “Delta” series, pilot to close, ball check valve.

### OPERATION

The DF-CPD allows free flow from (3) to (2), and blocks flow from (2) to (3). Flow will be blocked from (3) to (2) when sufficient pressure is applied at (1). The cartridge has various “pilot ratios” (see options).

Example: 1/4 for 4:1 of the load pressure held at (3) is required at (1) to close the valve. The check is spring biased to assure holding in static or no-load conditions.

### FEATURES

- Hardened parts for long life.
- Industry common cavity.

### HYDRAULIC SYMBOL

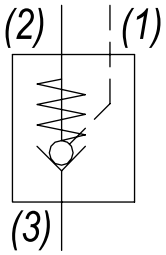


*Consult chart for flow operation of each model. Special higher bias spring values available. Consult factory.*

### PERFORMANCE

Actual Test Data (Cartridge Only)

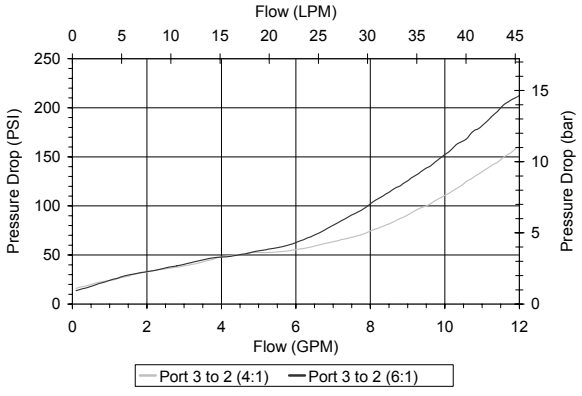


### VALVE SPECIFICATIONS

| | |
|---|---|
| Maximum Flow | 10 GPM (38 LPM) |
| Rated Operating Pressure | 3500 PSI (241 bar) |
| Typical Internal Leakage (150 SSU) | 50 drops/min from (2) to (3)<br>5 drops/min from (3) to (2)<br>when port (1) is piloted |
| Pilot Ratio | (see options) |
| Viscosity Range | 36 to 3000 SSU (3 to 647 cSt) |
| Filtration | ISO 18/16/13 |
| Media Operating Temp. Range | -40° to 250°F (-40° to 120°C) |
| Weight | .20 lbs (.09 kg) |
| Operating Fluid Media | General Purpose Hydraulic Fluid |
| Cartridge Torque Requirements | 30 ft-lbs (40.6 Nm) |
| Cavity | DELTA 3W |
| Cavity Form Tool (Finishing) | 40500001 |
| Seal Kit | 21191202 |

**WARNING:** *the specifications/application data shown in our catalogs and data sheets are intended only as a general guide for the product described (herein). Any specific application should not be undertaken without independent study, evaluation, and testing for suitability.*



Via Malavolti, 36 - 41122 Modena - ITALY - Phone +39 (059) 254895 - Fax +39 (059) 253512 - mail: tecnord@tecnord.com - **www.tecnord.com**

## DIMENSIONS

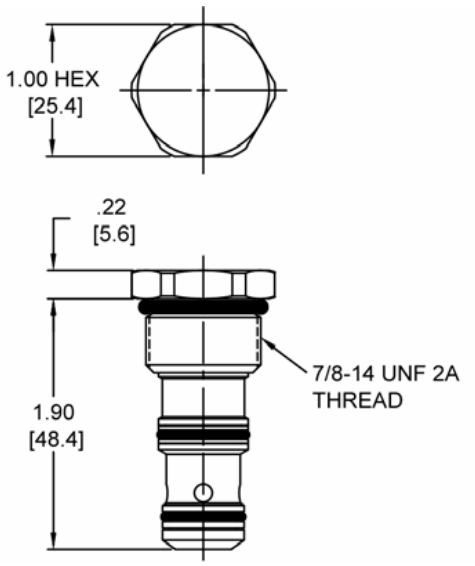


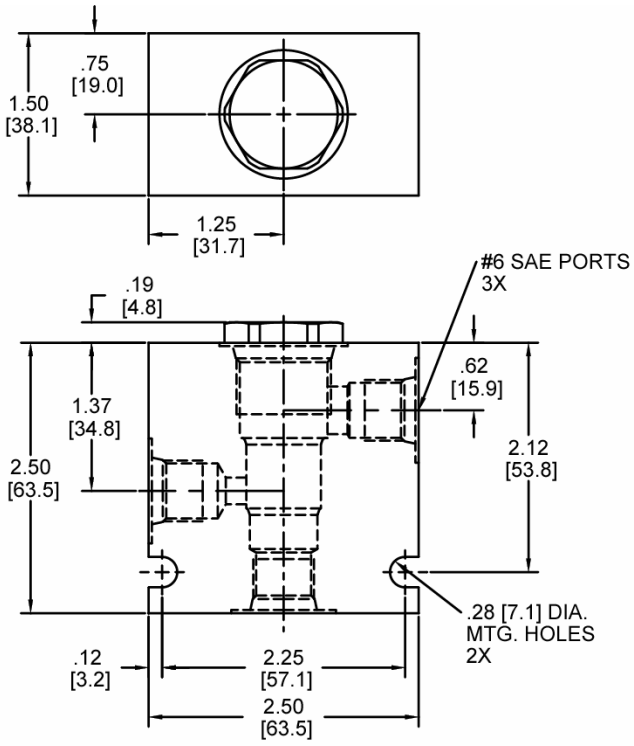


*Body Weight: .76 lbs (.35 kg)*

## ORDERING INFORMATION

**DF-CPD – ____ – ____ – ____**

**OPTIONS**

| | |
|---|---|
| Buna, 4:1 Ratio | **04** |
| Buna, 6:1 Ratio | **06** |
| Viton, 4:1 Ratio | **V4** |
| Viton, 6:1 Ratio | **V6** |

**CRACK PRESSURE**

| | |
|---|---|
| **0015** | 15 PSI |
| **0025** | 25 PSI |
| **0050** | 50 PSI |
| **0075** | 75 PSI |
| **0100** | 100 PSI |
| | ± 10% |

**BODIES**

| | |
|---|---|
| **Blank** | Without Body |
| **N** | 1/4” NPTF Ports |
| **S** | #6 SAE Ports |

**WARNING:** *the specifications/application data shown in our catalogs and data sheets are intended only as a general guide for the product described (herein). Any specific application should not be undertaken without independent study, evaluation, and testing for suitability.*

## SL-CPD PILOT TO CLOSE CHECK VALVE, POPPET

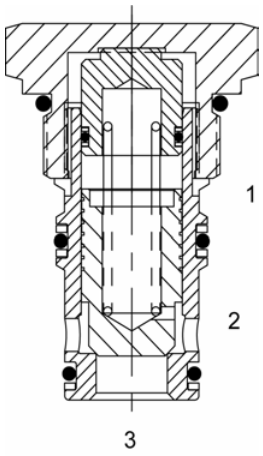


### DESCRIPTION

16 size, 1 5/16-12 thread, “Super” series, pilot to close, poppet check valve.

### OPERATION

The SL-CPD allows free flow from (3) to (2), and blocks flow from (2) to (3). Flow will be blocked from (3) to (2) when sufficient pressure is applied at (1). The cartridge has a 2:1 pilot ratio, meaning that at least one half of the load pressure held at (3) is required at (1) to close the valve. The check is spring biased to assure holding in static or no-load conditions.

### FEATURES

- Hardened seat for long life.
- Industry common cavity.

### HYDRAULIC SYMBOL

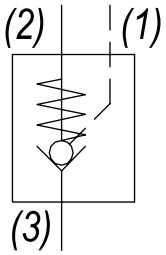


*Special higher bias spring values available. Consult factory.*

### PERFORMANCE

Actual Test Data (Cartridge Only)

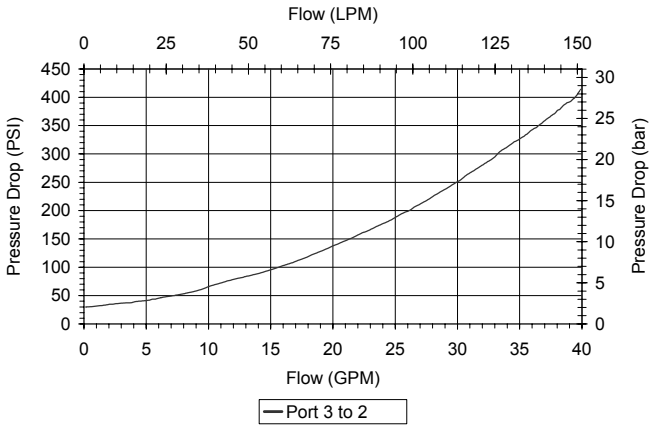


### VALVE SPECIFICATIONS

| | |
|---|---|
| Nominal Flow | 20 GPM (76 LPM) |
| Rated Operating Pressure | 3500 PSI (241 bar) |
| Typical Internal Leakage (150 SSU) | 5 drops/min |
| Pilot Ratio | 2:1 |
| Viscosity Range | 36 to 3000 SSU (3 to 647 cSt) |
| Filtration | ISO 18/16/13 |
| Media Operating Temp. Range | -40° to 250°F (-40° to 120°C) |
| Weight | .68 lbs (.31 kg) |
| Operating Fluid Media | General Purpose Hydraulic Fluid |
| Cartridge Torque Requirements | 90 ft-lbs (122 Nm) |
| Cavity | SUPER 3WS |
| Cavity Form Tool (Finishing) | 40500021 |
| Seal Kit | 21191404 |

**WARNING:** *the specifications/application data shown in our catalogs and data sheets are intended only as a general guide for the product described (herein). Any specific application should not be undertaken without independent study, evaluation, and testing for suitability.*



Via Malavolti, 36 - 41122 Modena - ITALY - Phone +39 (059) 254895 - Fax +39 (059) 253512 - mail: tecnord@tecnord.com - **www.tecnord.com**

## DIMENSIONS

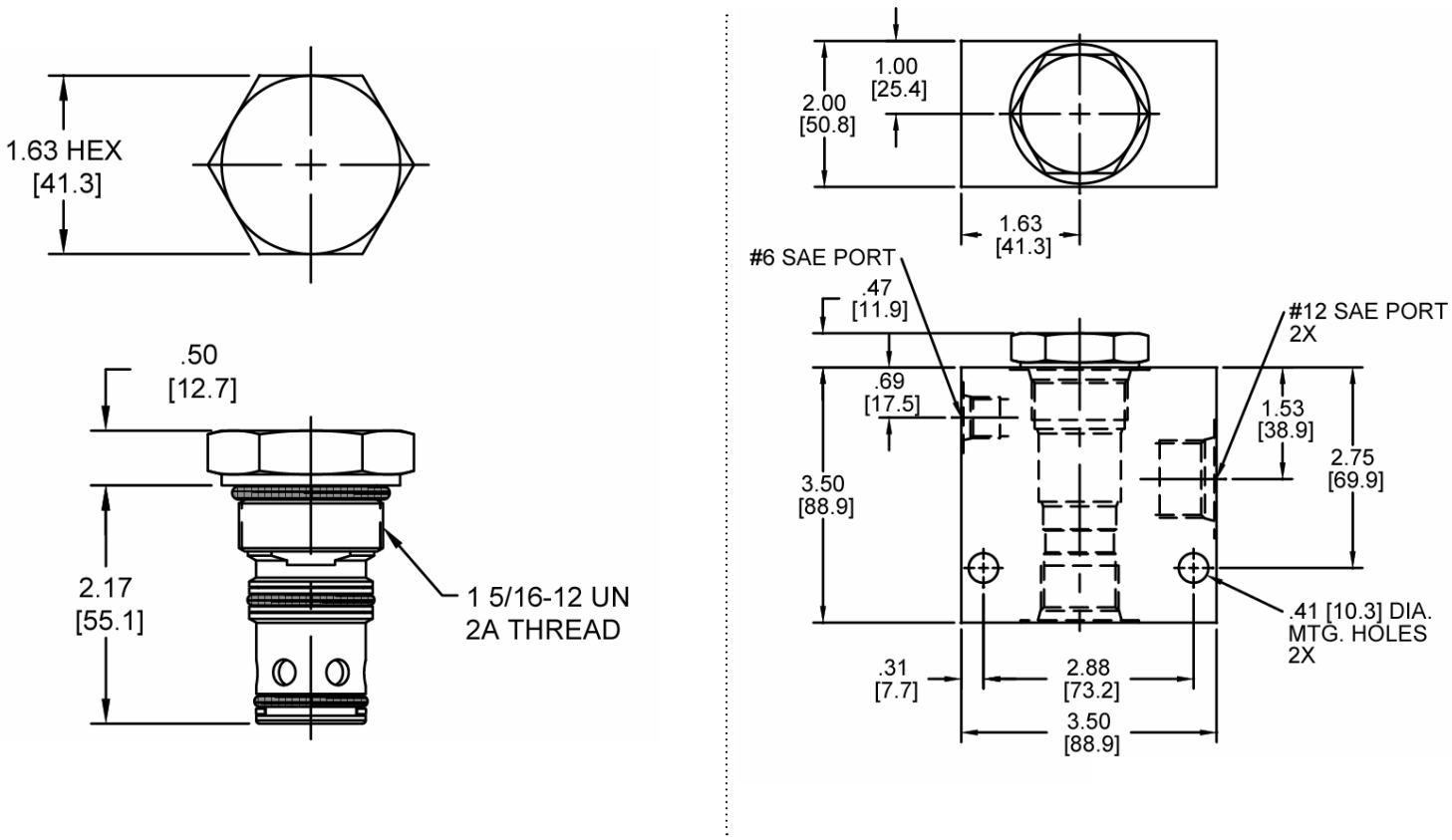


*Body Weight: 1.89 lbs (.86 kg)*

## ORDERING INFORMATION

**SL-CPD** – ____ – ____ – ____

**OPTIONS**

| | |
|---|---|
| Buna, 2:1 Ratio | **02** |
| Viton, 2:1 Ratio | **V2** |

**CRACK PRESSURE**

| | |
|---|---|
| **0015** | 15 PSI |
| **0025** | 25 PSI |
| **0050** | 50 PSI |
| **0075** | 75 PSI |
| **0100** | 100 PSI |
| | ± 10% |

**BODIES**

| | |
|---|---|
| **Blank** | Without Body |
| **S** | #12 SAE Ports |

**WARNING:** *the specifications/application data shown in our catalogs and data sheets are intended only as a general guide for the product described (herein). Any specific application should not be undertaken without independent study, evaluation, and testing for suitability.*



Via Malavolti, 36 - 41122 Modena - ITALY - Phone +39 (059) 254895 - Fax +39 (059) 253512 - mail: tecnord@tecnord.com - **www.tecnord.com**

## DE-CVT DIRECT ACTING CHECK VALVE THERMAL RELIEF, POPPET

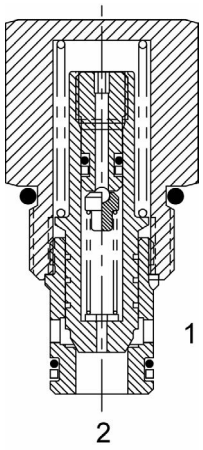


### DESCRIPTION

10 size, 7/8-14 thread, “Delta” series, direct acting check valve with thermal relief.

### OPERATION

The DE-CVT allows free flow passage from (2) to (1), and blocks flow from (1) to (2). If the pressure at (1) exceeds the thermal relief valve setting, a small amount of oil will be allowed to pass from (1) to (2), preventing cylinder damage from excessive pressure. The cartridge has a fully guided poppet, which is spring biased closed until sufficient pressure is applied at (2) to open to (1).
Note: the relief valve feature is not intended for use in dynamic pressure limiting applications. Consult factory.

### FEATURES

- Hardened parts for long life.
- Optional bias springs for backpressure application flexibility.
- Fully guided poppet assembly.
- Industry common cavity.

*Nominal flow rating is 15 GPM for free flow port (2) to (1). Consult chart for free flow differential pressure. Thermal relief is cyclic rated to 0.1 GPM. Port (1) to (2) chart demonstrates override characteristics for a typical thermal relief application.*

### PERFORMANCE

Actual Test Data (Cartridge Only)

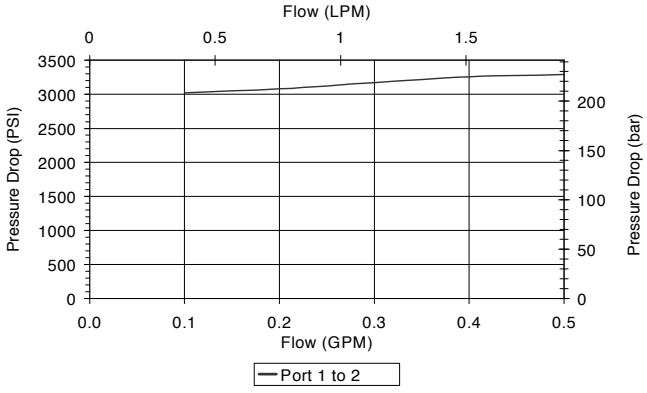


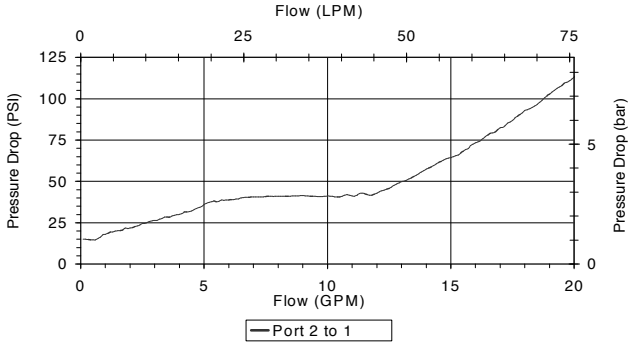


### HYDRAULIC SYMBOL

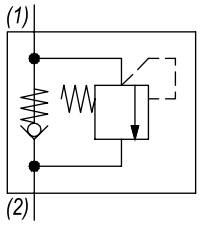


### VALVE SPECIFICATIONS

| | |
|---|---|
| Nominal Flow | 15 GPM (57 LPM) |
| Rated Operating Pressure | 4000 PSI (276 bar) |
| Typical Internal Leakage (150 SSU) | 0-10 drops/min |
| Viscosity Range | 36 to 3000 SSU (3 to 647 cSt) |
| Filtration | ISO 18/16/13 |
| Media Operating Temp. Range | -40° to 250°F (-40° to 120°C) |
| Weight | .31 lbs (.14 kg) |
| Operating Fluid Media | General Purpose Hydraulic Fluid |
| Cartridge Torque Requirements | 30 ft-lbs (40.6 Nm) |
| Cavity | DELTA 2W |
| Cavity Form Tool (Finishing) | 40500000 |
| Seal Kit | 21191200 |

**WARNING:** *the specifications/application data shown in our catalogs and data sheets are intended only as a general guide for the product described (herein). Any specific application should not be undertaken without independent study, evaluation, and testing for suitability.*



Via Malavolti, 36 - 41122 Modena - ITALY - Phone +39 (059) 254895 - Fax +39 (059) 253512 - mail: tecnord@tecnord.com - **www.tecnord.com**

## DIMENSIONS

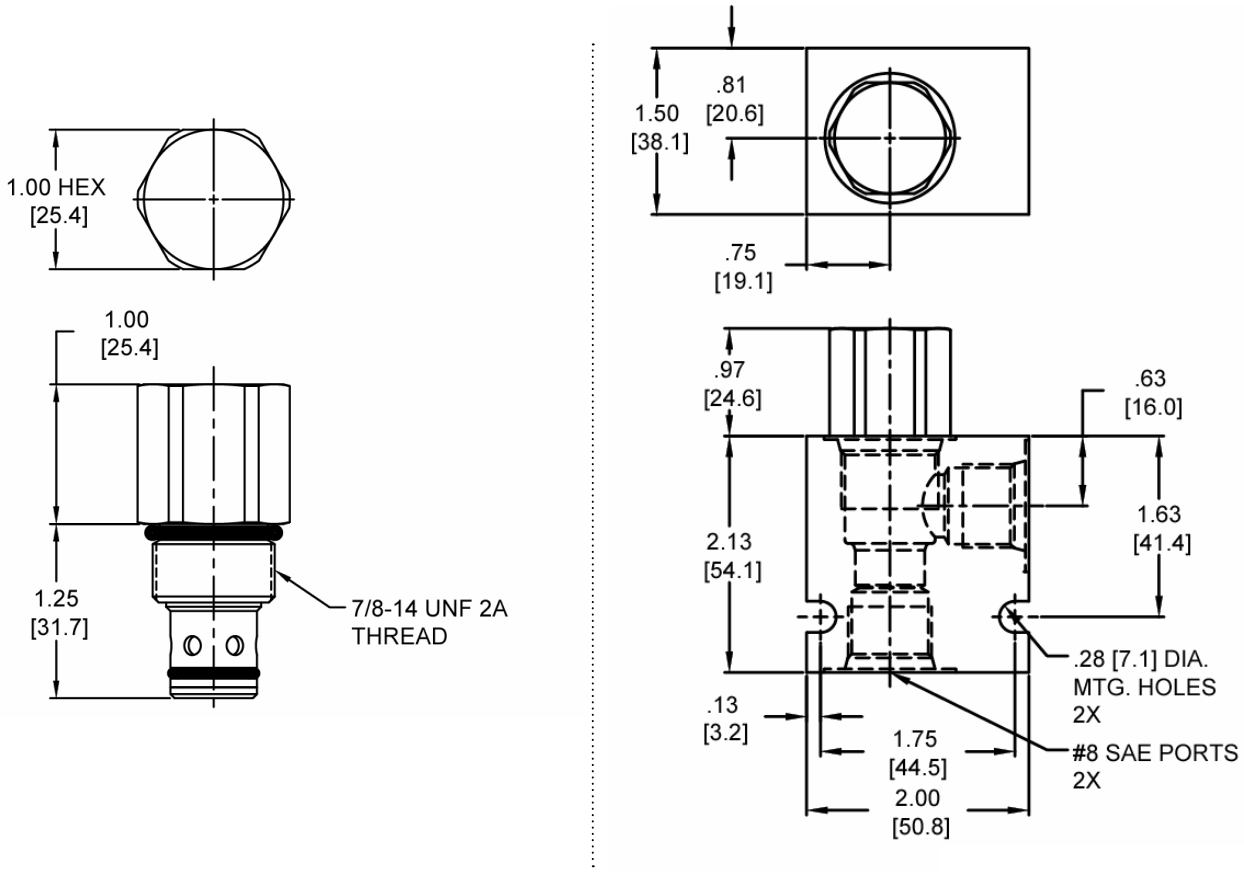


*Body Weight: .47 lbs (.21 kg)*

## ORDERING INFORMATION

**DE-CVT** – ____ – ____ – ____ – ____

**OPTIONS**
Buna Standard **00**
Viton Standard **V0**

**PRESSURE SETTING**
1000 PSI **1**
2000 PSI **2**
3000 PSI **3**
4000 PSI **4**

**VOLTAGE**
**0020** 20 PSI
**0100** 100 PSI
± 10%

**BODIES**
**Blank** Without Body
**N** 3/8" NPTF Ports
**S** #8 SAE Ports

**WARNING**
**DO NOT USE ALUMINUM BODY**
**HIGH PRESSURE (4000 PSI) PRODUCT**

**WARNING:** *the specifications/application data shown in our catalogs and data sheets are intended only as a general guide for the product described (herein). Any specific application should not be undertaken without independent study, evaluation, and testing for suitability.*



Via Malavolti, 36 - 41122 Modena - ITALY - Phone +39 (059) 254895 - Fax +39 (059) 253512 - mail: tecnord@tecnord.com - **www.tecnord.com**

**WARNING:** *the specifications/application data shown in our catalogs and data sheets are intended only as a general guide for the product described (herein). Any specific application should not be undertaken without independent study, evaluation, and testing for suitability.*



Via Malavolti, 36 - 41122 Modena - ITALY - Phone +39 (059) 254895 - Fax +39 (059) 253512 - mail: tecnord@tecnord.com - **www.tecnord.com**

## 2 WAY 2 POSITION MANUAL VALVES

| | GPM | PSI | LPM | BAR | CAVITY | MODEL | PAGE |
|---|---|---|---|---|---|---|---|
| 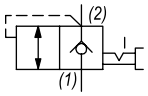 | 12 | 3500 | 45 | 241 | 3/4-16 | **PB-MCA** | MD56 |
| 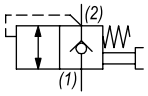 | 15 | 3500 | 57 | 241 | 7/8-14 | **DE-MCA** | MD58 |
| | 20 | 1500 | 76 | 103 | 7/8-14 | **DE-MCF** | MD60 |
| | 20 | 3500 | 76 | 241 | 7/8-14 | **DE-MCS** | MD62 |
| 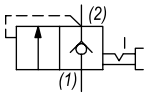 | 20 | 3500 | 76 | 241 | 7/8-14 | **DE-MCB** | MD64 |
| 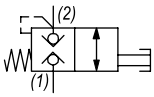 | 8 | 3500 | 30 | 241 | 3/4-16 | **PB-MCI** | MD66 |
| 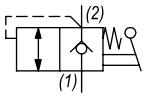 | 8 | 3500 | 30 | 241 | 3/4-16 | **PB-MCL** | MD68 |
| | 15 | 3500 | 57 | 241 | 7/8-14 | **DE-MCL** | MD70 |
| 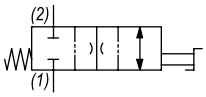 | 20 | 3000 | 76 | 207 | 7/8-14 | **DE-M2G** | MD72 |
| 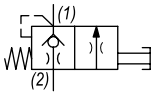 | 1 | 4000 | 4 | 276 | 3/4-16 | **HB-MCP** | MD74 |

## TYPICAL SCHEMATIC

Typical application for MCA, MCB, MCF, MCL, and MCS is an emergency lowering device. Typical application for the MCI is a selector circuit when load holding is required in both directions. Typical application for the M2G is adjustable speed control or full bypass of fluid motor. Typical application for the MCP is a pilot dump valve.

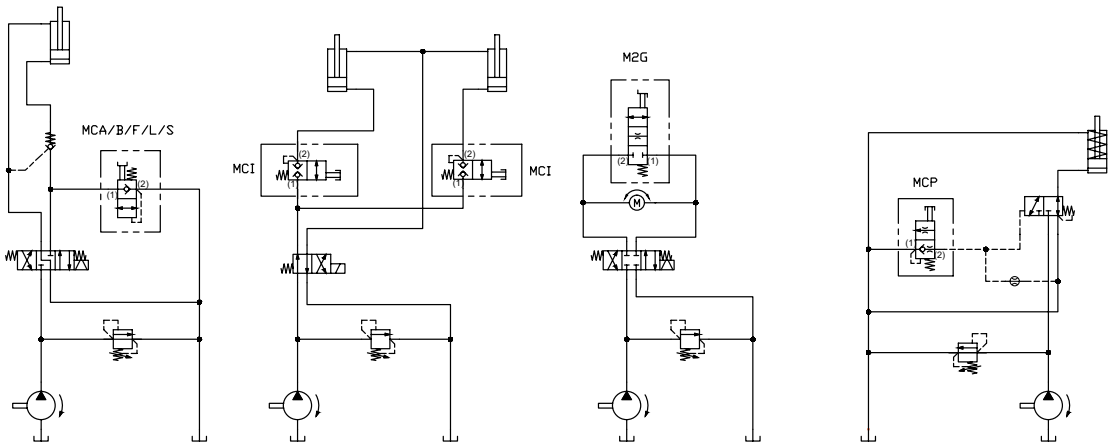


**WARNING:** *the specifications/application data shown in our catalogs and data sheets are intended only as a general guide for the product described (herein). Any specific application should not be undertaken without independent study, evaluation, and testing for suitability.*

## PB-MCA MANUAL POPPET VALVE, 2 WAY NORMALLY CLOSED, PULL TYPE

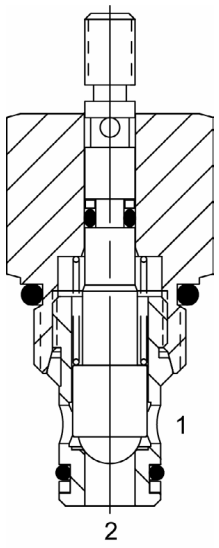


### DESCRIPTION

8 size, 3/4-16 thread, “Power” series, manual poppet, 2 way normally closed, pull type valve.

### OPERATION

The PB-MCA blocks flow from (1) to (2) until an operator pulls the shaft outward. The bias spring (see option page for pressure) allows for backpressure at (2) before the valve will open.
Note: pressure at port (2) will act directly on the poppet and spring. Port (2) is intended to be a tank port only.

### FEATURES

- Hardened parts for long life.
- Industry common cavity.
- Optional bias springs for backpressure application flexibility.

### HYDRAULIC SYMBOL

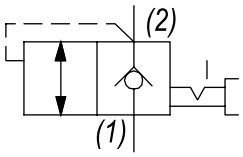


*75 PSI bias provides comfortable effort where return line is near zero. 150 PSI option may be difficult to pull, if tank pressure is near zero. Pressure above SPRING BIAS PRESSURE at port (2) may cause valve to self open.*

### PERFORMANCE

Actual Test Data (Cartridge Only)

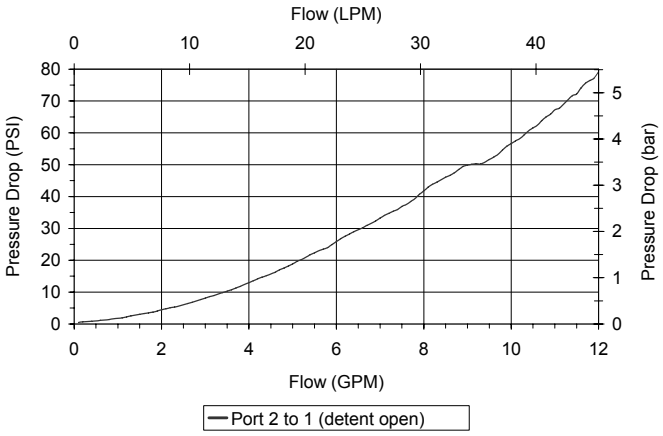


### VALVE SPECIFICATIONS

| | |
|---|---|
| Nominal Flow | 12 GPM (45 LTR/M) |
| Rated Operating Pressure | 3500 PSI (241 bar) |
| Typical Internal Leakage (150 SSU) | 0-5 drops/min |
| Viscosity Range | 36 to 3000 SSU (3 to 647 cSt) |
| Filtration | ISO 18/16/13 |
| Media Operating Temp. Range | -40° to 250°F (-40° to 120°C) |
| Weight | .21 lbs (.10 kg) |
| Operating Fluid Media | General Purpose Hydraulic Fluid |
| Cartridge Torque Requirements | 25 ft-lbs (34 Nm) |
| Cavity | POWER 2W |
| Cavity Form Tool (Finishing) | 40500005 |
| Seal Kit | 21191100 |

**WARNING:** *the specifications/application data shown in our catalogs and data sheets are intended only as a general guide for the product described (herein). Any specific application should not be undertaken without independent study, evaluation, and testing for suitability.*



Via Malavolti, 36 - 41122 Modena - ITALY - Phone +39 (059) 254895 - Fax +39 (059) 253512 - mail: tecnord@tecnord.com - **www.tecnord.com**

## DIMENSIONS

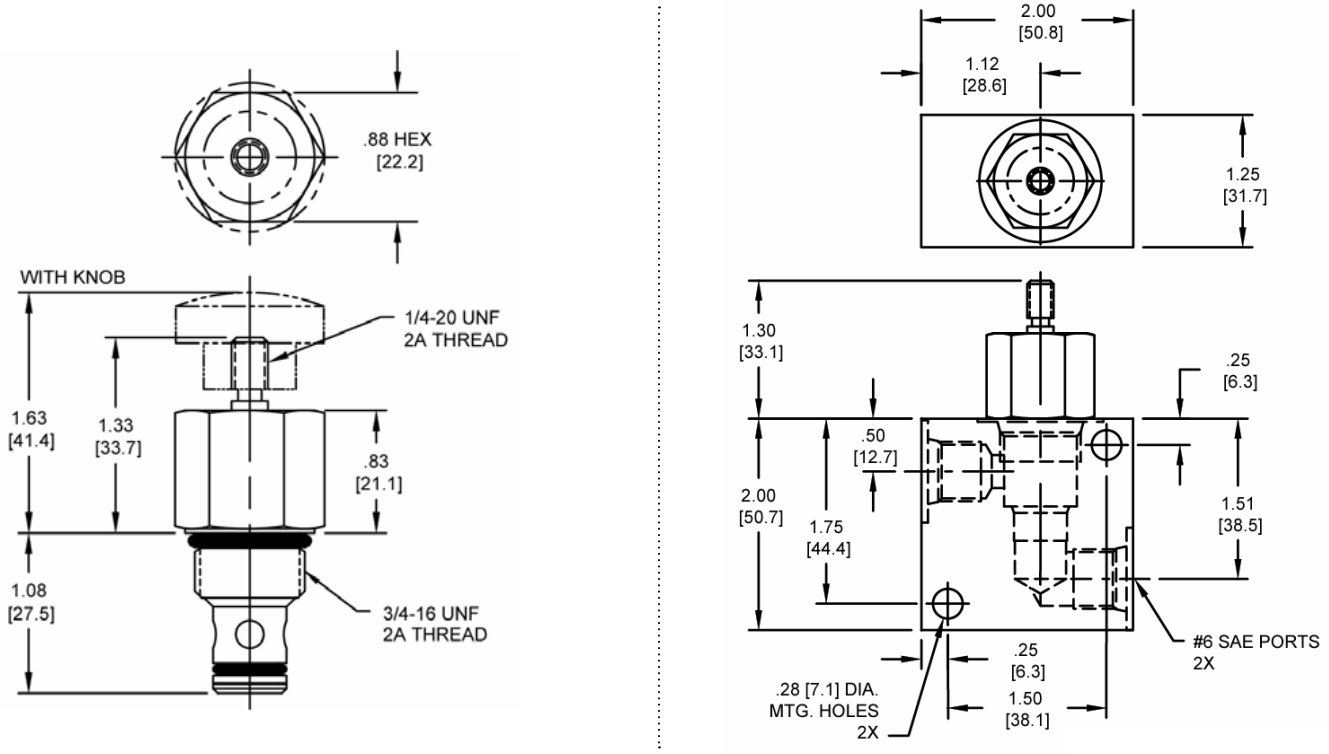


*Body Weight: .39 lbs (.18 kg)*

## ORDERING INFORMATION

**PB-MCA – ____ – ____ – ____**

**OPTIONS**

| | |
|---|---|
| Buna Standard | **00** |
| Viton Standard | **V0** |
| Buna, Screen | **A0** |
| Viton, Screen | **W0** |
| Buna, Knob | **0K** |
| Viton, Knob | **VK** |
| Buna, Knob, Screen | **AK** |
| Viton , Knob, Screen | **WK** |
| Buna, Detent | **0D** |
| Viton, Detent | **VD** |
| Buna, Screen, Detent | **AD** |
| Viton, Screen, Detent | **WD** |
| Buna, Knob, Detent | **1D** |
| Viton, Knob, Detent | **2D** |
| Buna, Knob, Screen, Detent | **3D** |
| Viton, Knob, Screen, Detent | **4D** |

**Note: use screen only if flow direction is from (1) to (2).**

**SPRING BIAS PRESSURE**

| | |
|---|---|
| **0075** | 75 PSI |
| **0150** | 150 PSI |

**Note: pressure above SPRING BIAS PRESSURE at port (2) may cause valve to self open.**

**BODIES**

| | |
|---|---|
| **Blank** | Without Body |
| **N** | 1/4” NPT Ports |
| **S** | #6 SAE Ports |

**WARNING:** *the specifications/application data shown in our catalogs and data sheets are intended only as a general guide for the product described (herein). Any specific application should not be undertaken without independent study, evaluation, and testing for suitability.*

## DE-MCA MANUAL POPPET VALVE, 2 WAY NORMALLY CLOSED, PULL TYPE

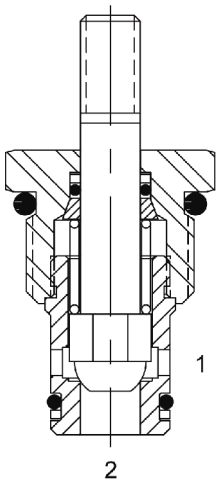


### DESCRIPTION

10 size, 7/8-14 thread, “Delta” series, manual poppet valve, 2 way normally closed, pull type.

### OPERATION

The DE-MCA blocks flow from (1) to (2) until an operator pulls the shaft outward. The bias spring allows for backpressure at (2) before the valve will open (see option page for pressure).
Note: pressure at port (2) will directly act on the poppet and spring. Port (2) is intended to be a tank port only.

### FEATURES

- Hardened parts for long life.
- Industry common cavity.
- Optional bias springs for backpressure application flexibility.

### HYDRAULIC SYMBOL

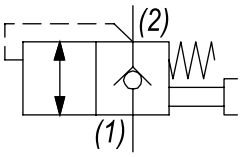


*65 PSI bias provides comfortable effort where return line is near zero. 160 PSI option may be difficult to pull, if tank pressure is near zero.*

### PERFORMANCE

Actual Test Data (Cartridge Only)

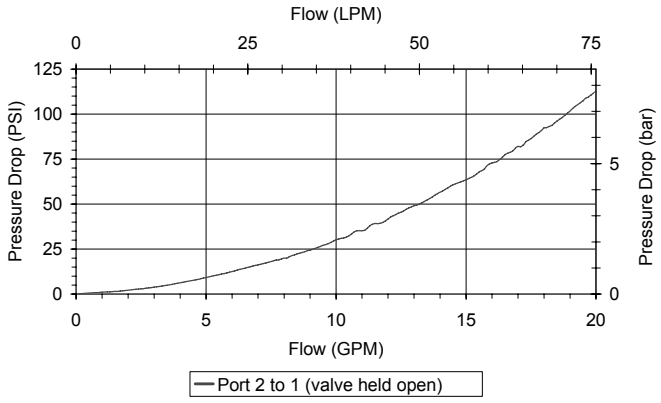


### VALVE SPECIFICATIONS

| | |
|---|---|
| Nominal Flow | 15 GPM (57 LPM) |
| Rated Operating Pressure | 3500 PSI (241 bar) |
| Typical Internal Leakage (150 SSU) | 5 drops/min |
| Viscosity Range | 36 to 3000 SSU (3 to 647 cSt) |
| Filtration | ISO 18/16/13 |
| Media Operating Temp. Range | -40° to 250°F (-40° to 120°C) |
| Weight | .18 lbs (.08 kg) |
| Operating Fluid Media | General Purpose Hydraulic Fluid |
| Cartridge Torque Requirements | 30 ft-lbs (40.6 Nm) |
| Cavity | DELTA 2W |
| Cavity Form Tool (Finishing) | 40500000 |
| Seal Kit | 21191200 |

**WARNING:** *the specifications/application data shown in our catalogs and data sheets are intended only as a general guide for the product described (herein). Any specific application should not be undertaken without independent study, evaluation, and testing for suitability.*



Via Malavolti, 36 - 41122 Modena - ITALY - Phone +39 (059) 254895 - Fax +39 (059) 253512 - mail: tecnord@tecnord.com - **www.tecnord.com**

## DIMENSIONS

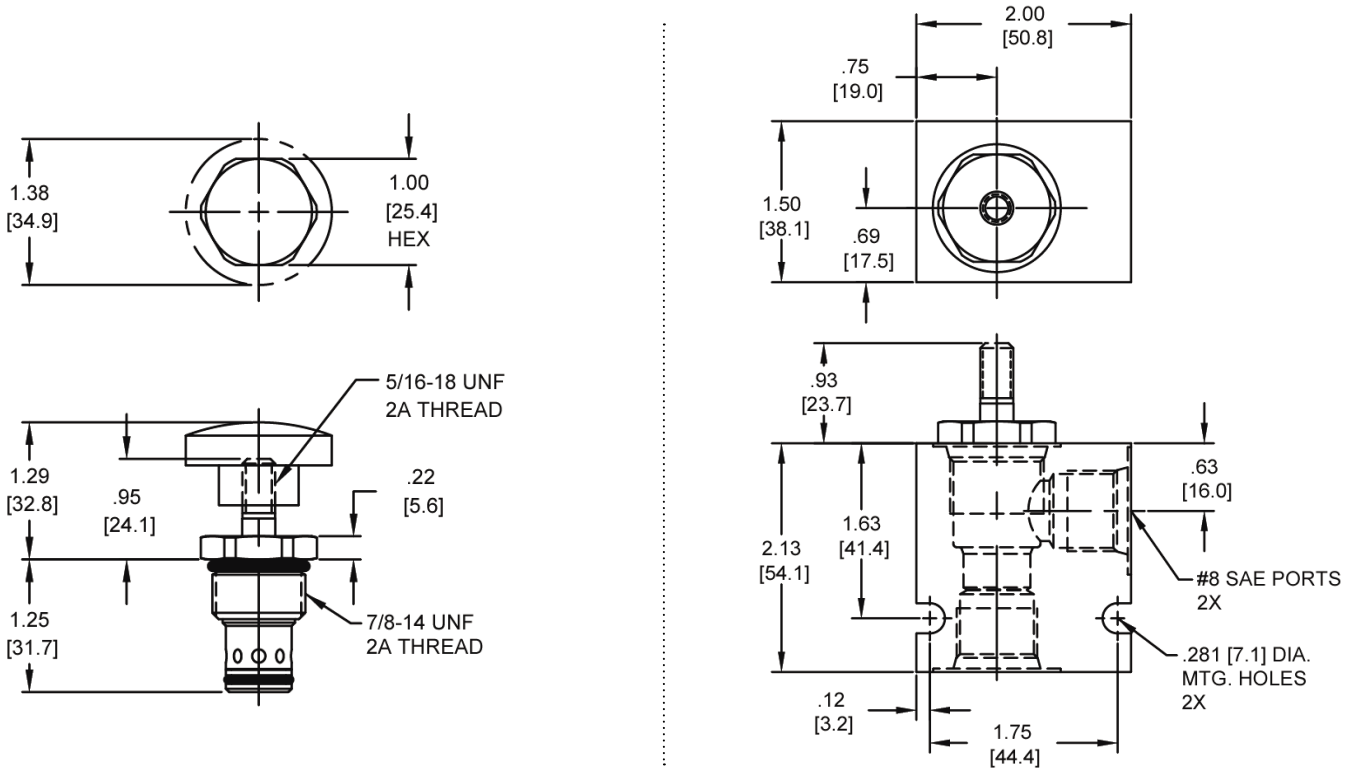


*Body Weight: .47 lbs (.21 kg)*

## ORDERING INFORMATION

**DE-MCA – _____ – _____ – _____**

**OPTIONS**

| | |
|---|---|
| Buna Standard | **00** |
| Viton Standard | **V0** |
| Buna, Screen | **A0** |
| Viton, Screen | **W0** |
| Buna, Knob | **0K** |
| Viton, Knob | **VK** |
| Buna, Knob, Screen | **AK** |
| Viton, Knob, Screen | **WK** |

**Note: use screen only if flow direction is from (1) to (2).**

**SPRING BIAS PRESSURE**

| | |
|---|---|
| **0065** | 65 PSI |
| **0160** | 160 PSI |

**Note: pressure above SPRING BIAS PRESSURE at port (2) may cause valve to self open.**

**BODIES**

| | |
|---|---|
| **Blank** | Without Body |
| **N** | 3/8” NPTF Ports |
| **S** | #8 SAE Ports |

**WARNING:** *the specifications/application data shown in our catalogs and data sheets are intended only as a general guide for the product described (herein). Any specific application should not be undertaken without independent study, evaluation, and testing for suitability.*

## DE-MCF MANUAL POPPET VALVE, 2 WAY NORMALLY CLOSED, PULL TYPE, SOFT SEAT

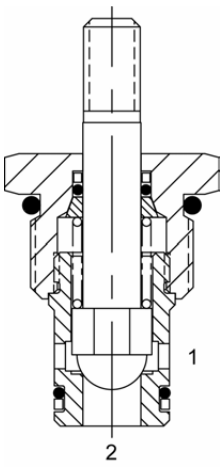


### DESCRIPTION

10 size, 7/8-14 thread, “Delta” series, manual poppet valve, 2 way normally closed, pull type, soft seat.

### OPERATION

The DE-MCF blocks flow from (1) to (2) until an operator pulls the shaft outward. The bias spring allows for backpressure at (2) before the valve will open (see option page for pressure).
Note: pressure at port (2) will directly act on the spool and spring. Port (2) is intended to be a tank port only.

### FEATURES

- Soft seat for ultra low leakage.
- Industry common cavity.

### HYDRAULIC SYMBOL

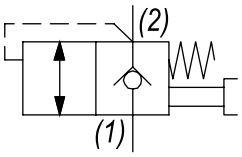


*Pressure above SPRING BIAS PRESSURE at port (2) may cause valve to self open.*

### PERFORMANCE

Actual Test Data (Cartridge Only)

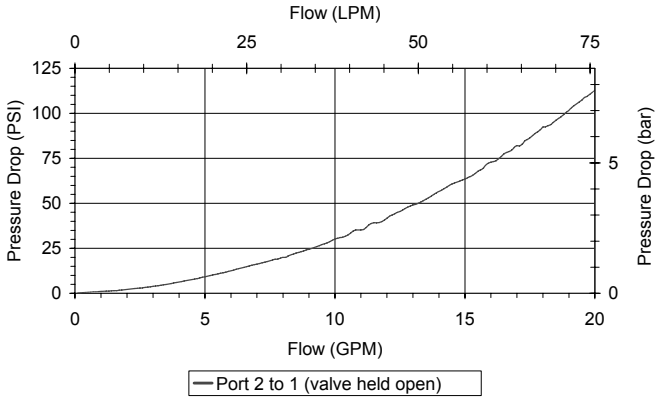


### VALVE SPECIFICATIONS

| | |
|---|---|
| Nominal Flow | 20 GPM (76 LPM) |
| Rated Operating Pressure | 1500 PSI (103 bar) |
| Typical Internal Leakage (150 SSU) | Neglibile |
| Viscosity Range | 36 to 3000 SSU (3 to 647 cSt) |
| Filtration | ISO 18/16/13 |
| Media Operating Temp. Range | -32° to 160°F (0° to 70°C) |
| Weight | .14 lbs (.06 kg) |
| Operating Fluid Media | General Purpose Hydraulic Fluid |
| Cartridge Torque Requirements | 30 ft-lbs (40.6 Nm) |
| Cavity | DELTA 2W |
| Cavity Form Tool (Finishing) | 40500000 |
| Seal Kit | 21191200 |

**WARNING:** *the specifications/application data shown in our catalogs and data sheets are intended only as a general guide for the product described (herein). Any specific application should not be undertaken without independent study, evaluation, and testing for suitability.*



Via Malavolti, 36 - 41122 Modena - ITALY - Phone +39 (059) 254895 - Fax +39 (059) 253512 - mail: tecnord@tecnord.com - **www.tecnord.com**

## DIMENSIONS

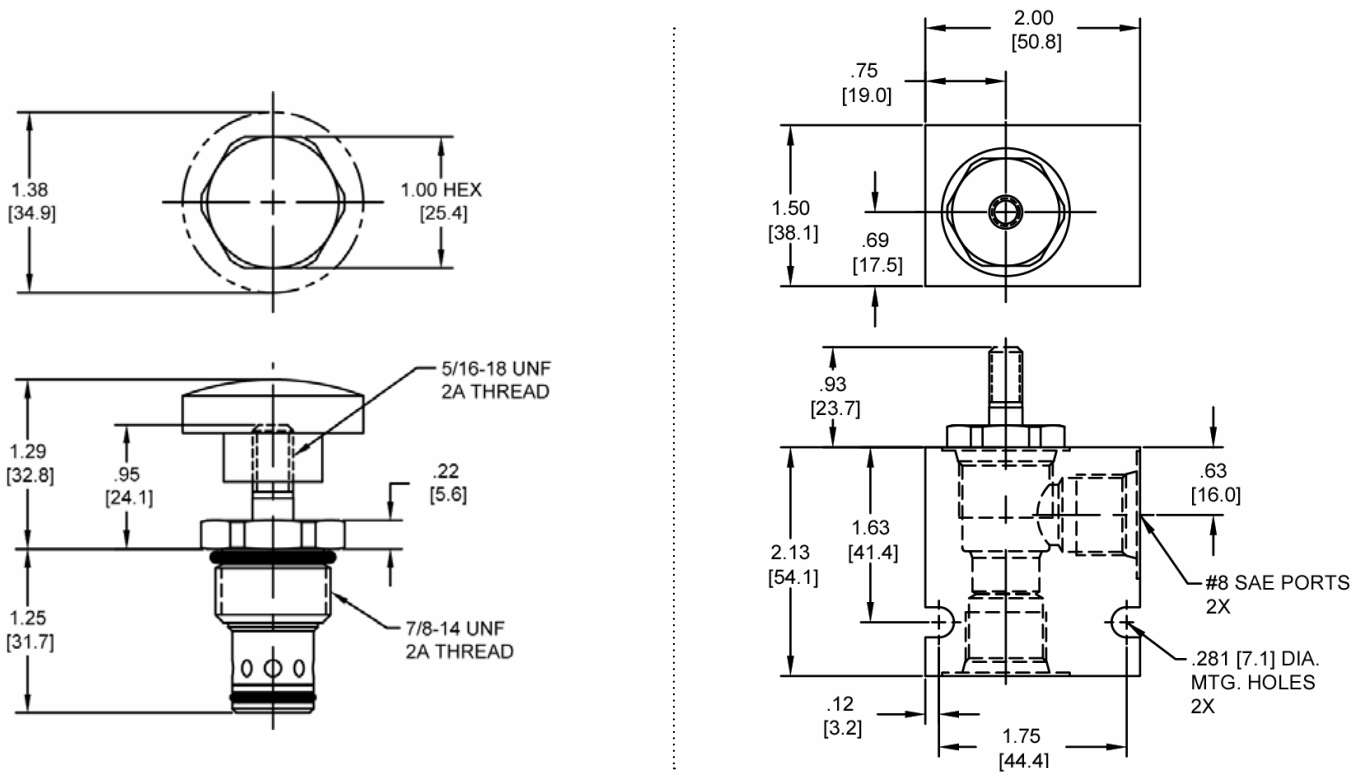


*Body Weight: .47 lbs (.21 kg)*

## ORDERING INFORMATION

**DE-MCF – _____ – _____ – _____**

**OPTIONS**

| | |
|---|---|
| Buna Standard | **00** |
| Viton Standard | **V0** |
| Buna, Screen | **A0** |
| Viton, Screen | **W0** |
| Buna, Knob | **0K** |
| Viton, Knob | **VK** |
| Buna, Knob, Screen | **AK** |
| Viton, Knob, Screen | **WK** |

**Note: use screen only if flow direction is from (1) to (2).**

**SPRING BIAS PRESSURE**

| | |
|---|---|
| **0065** | 65 PSI |

**Note: pressure above SPRING BIAS PRESSURE at port (2) may cause valve to self open.**

**BODIES**

| | |
|---|---|
| **Blank** | Without Body |
| **N** | 3/8" NPTF Ports |
| **S** | #8 SAE Ports |

**WARNING:** *the specifications/application data shown in our catalogs and data sheets are intended only as a general guide for the product described (herein). Any specific application should not be undertaken without independent study, evaluation, and testing for suitability.*

## DE-MCS MANUAL POPPET VALVE, 2 WAY NORMALLY CLOSED, PULL TYPE, CORROSION RESISTANT

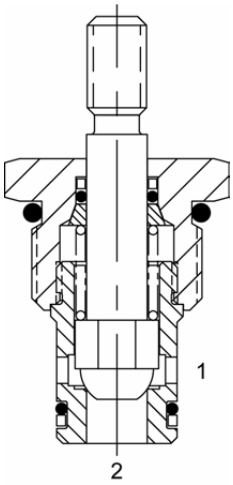


### DESCRIPTION

10 size, 7/8-14 thread, “Delta” series, manual poppet valve, 2 way normally closed, pull type, corrosion resistant.

### OPERATION

The DE-MCS blocks flow from (1) to (2) until an operator pulls the shaft outward. The bias spring allows for backpressure at (2) before the valve will open (see option page for pressure).
Note: pressure at port (2) will directly act on the spool and spring. Port (2) is intended to be a tank port only.

### FEATURES

- Hardened parts for long life.
- Industry common cavity.
- Corrosion resistant.
- Optional bias springs for backpressure application flexibility.

### HYDRAULIC SYMBOL

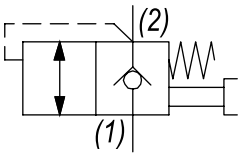


*65 PSI bias provides comfortable effort where return line is near zero. 160 PSI option may be difficult to pull, if tank pressure is near zero. Stainless Steel Shaft. Pressure above SPRING BIAS PRESSURE at port (2) may cause valve to self open.*

### PERFORMANCE

Actual Test Data (Cartridge Only)

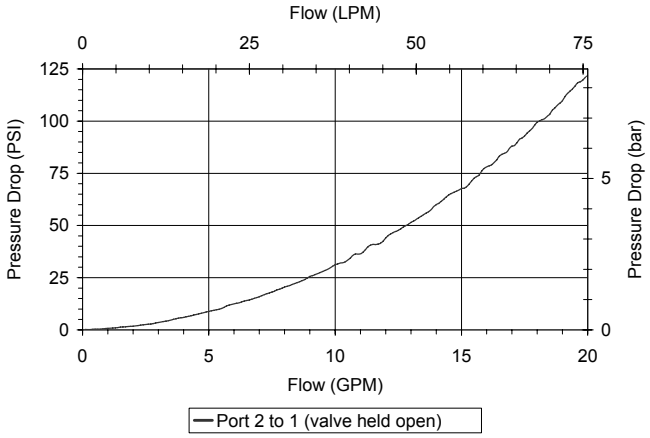


### VALVE SPECIFICATIONS

| | |
|---|---|
| Nominal Flow | 20 GPM (76 LPM) |
| Rated Operating Pressure | 3500 PSI (241 bar) |
| Typical Internal Leakage (150 SSU) | 0-5 drops/min |
| Viscosity Range | 36 to 3000 SSU (3 to 647 cSt) |
| Filtration | ISO 18/16/13 |
| Media Operating Temp. Range | -40° to 250°F (-40° to 120°C) |
| Weight | .75 lbs (.34 kg) |
| Operating Fluid Media | General Purpose Hydraulic Fluid |
| Cartridge Torque Requirements | 30 ft-lbs (40.6 Nm) |
| Cavity | DELTA 2W |
| Cavity Form Tool (Finishing) | 40500000 |
| Seal Kit | 21191200 |

**WARNING:** *the specifications/application data shown in our catalogs and data sheets are intended only as a general guide for the product described (herein). Any specific application should not be undertaken without independent study, evaluation, and testing for suitability.*



Via Malavolti, 36 - 41122 Modena - ITALY - Phone +39 (059) 254895 - Fax +39 (059) 253512 - mail: tecnord@tecnord.com - **www.tecnord.com**

## DIMENSIONS

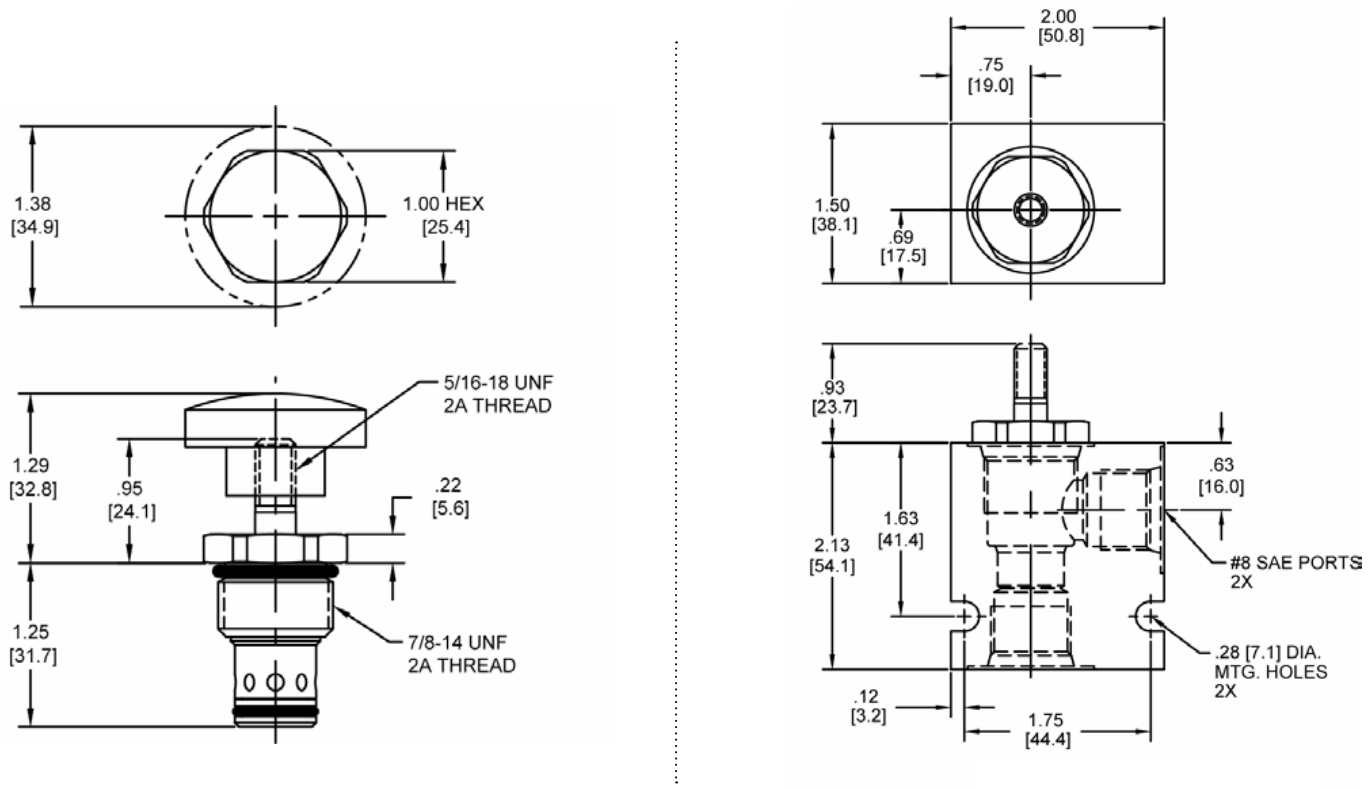


*Body Weight: .47 lbs (.21 kg)*

## ORDERING INFORMATION

**DE-MCS – _____ – _____ – _____**

**OPTIONS**

| | |
|---|---|
| Buna Standard | **00** |
| Viton Standard | **V0** |
| Buna, Screen | **A0** |
| Viton, Screen | **W0** |
| Buna, Knob | **0K** |
| Viton, Knob | **VK** |
| Buna, Knob, Screen | **AK** |
| Viton, Knob, Screen | **WK** |

**Note: use screen only if flow direction is from (1) to (2).**

**SPRING BIAS PRESSURE**

| | |
|---|---|
| **0065** | 65 PSI |
| **0160** | 160 PSI |

**Note: pressure above SPRING BIAS PRESSURE at port (2) may cause valve to self open.**

**BODIES**

| | |
|---|---|
| **Blank** | Without Body |
| **N** | 3/8" NPTF Ports |
| **S** | #8 SAE Ports |

**WARNING:** *the specifications/application data shown in our catalogs and data sheets are intended only as a general guide for the product described (herein). Any specific application should not be undertaken without independent study, evaluation, and testing for suitability.*

## DE-MCB MANUAL POPPET VALVE, 2 WAY NORMALLY CLOSED, PULL, DETENT

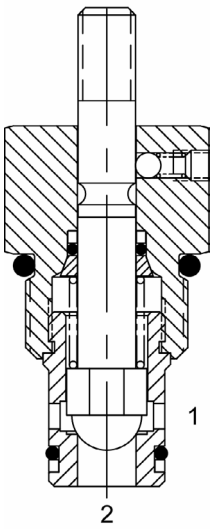


### DESCRIPTION

10 size, 7/8-14 thread, “Delta” series, manual poppet valve, 2 way normally closed, pull with detent.

### OPERATION

The DE-MCB blocks flow from (1) to (2) until an operator pulls the shaft outward. The bias spring allows for backpressure at (2) before the valve will open (see option page for pressure).
Note: pressure at port (2) will directly act on the spool and spring. Port (2) is intended to be a tank port only.

### FEATURES

- Hardened parts for long life.
- Industry common cavity.
- Optional bias springs for backpressure application flexibility.

### HYDRAULIC SYMBOL

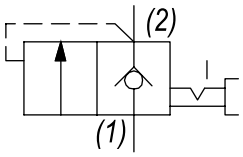


*65 PSI bias provides comfortable effort where return line is near zero. 160 PSI option may be difficult to pull, if tank pressure is near zero. Pressure above SPRING BIAS PRESSURE at port (2) may cause valve to self open.*

### PERFORMANCE

Actual Test Data (Cartridge Only)

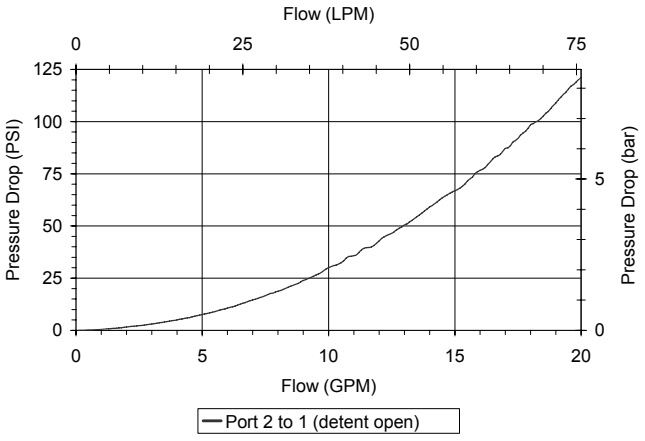


### VALVE SPECIFICATIONS

| | |
|---|---|
| Nominal Flow | 20 GPM (76 LPM) |
| Rated Operating Pressure | 3500 PSI (241 bar) |
| Typical Internal Leakage (150 SSU) | 5 drops/min |
| Viscosity Range | 36 to 3000 SSU (3 to 647 cSt) |
| Filtration | ISO 18/16/13 |
| Media Operating Temp. Range | -40° to 250°F (-40° to 120°C) |
| Weight | .28 lbs (.13 kg) |
| Operating Fluid Media | General Purpose Hydraulic Fluid |
| Cartridge Torque Requirements | 30 ft-lbs (40.6 Nm) |
| Cavity | DELTA 2W |
| Cavity Form Tool (Finishing) | 40500000 |
| Seal Kit | 21191200 |

**WARNING:** *the specifications/application data shown in our catalogs and data sheets are intended only as a general guide for the product described (herein). Any specific application should not be undertaken without independent study, evaluation, and testing for suitability.*



Via Malavolti, 36 - 41122 Modena - ITALY - Phone +39 (059) 254895 - Fax +39 (059) 253512 - mail: tecnord@tecnord.com - **www.tecnord.com**

## DIMENSIONS

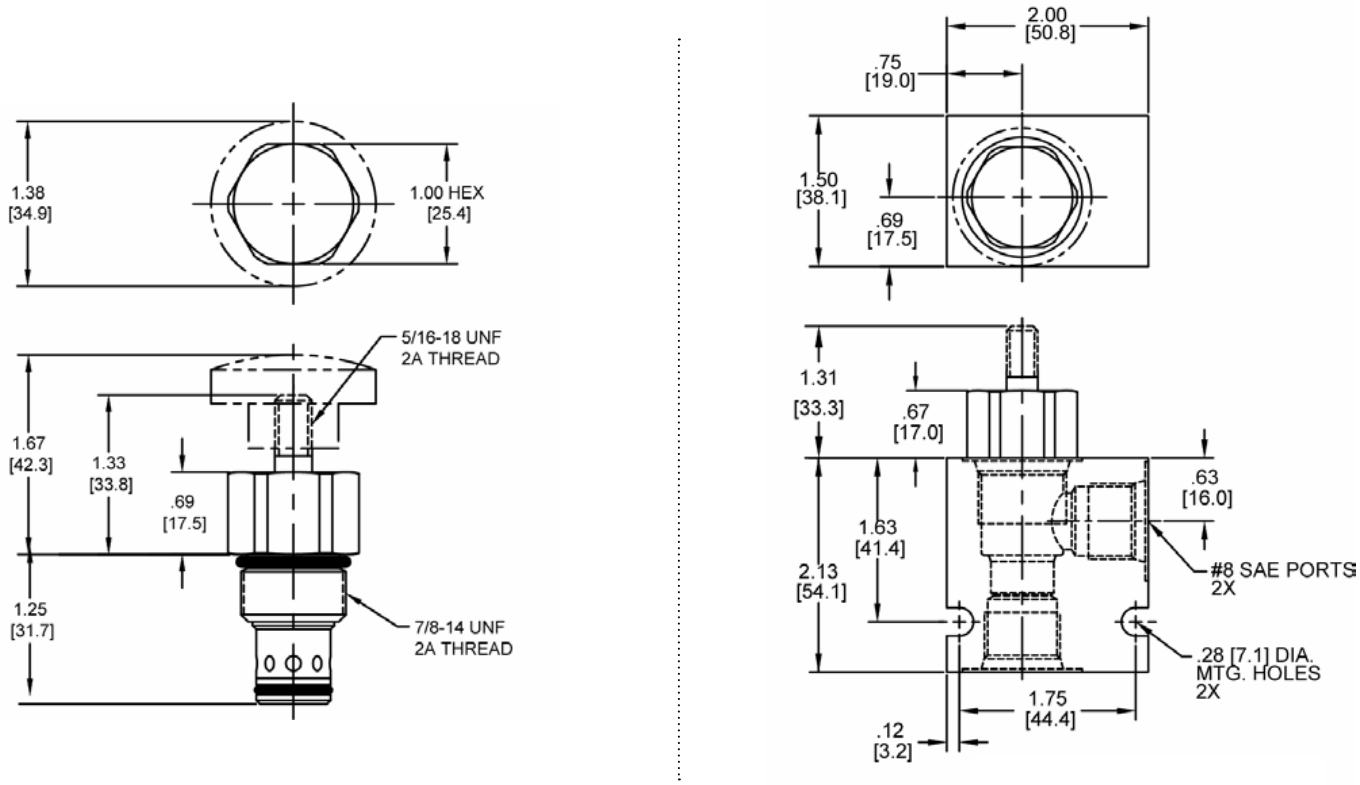


*Body Weight: .47 lbs (.21 kg)*

## ORDERING INFORMATION

**DE-MCB – _____ – _____ – _____**

**OPTIONS**

| | |
|---|---|
| Buna Standard | **00** |
| Viton Standard | **V0** |
| Buna, Screen | **A0** |
| Viton, Screen | **W0** |
| Buna, Knob | **0K** |
| Viton, Knob | **VK** |
| Buna, Knob, Screen | **AK** |
| Viton, Knob, Screen | **WK** |

**Note: use screen only if flow direction is from (1) to (2).**

**SPRING BIAS PRESSURE**

| | |
|---|---|
| **0065** | 65 PSI |
| **0160** | 160 PSI |

**Note: pressure above SPRING BIAS PRESSURE at port (2) may cause valve to self open.**

**BODIES**

| | |
|---|---|
| **Blank** | Without Body |
| **N** | 3/8" NPTF Ports |
| **S** | #8 SAE Ports |

**WARNING:** *the specifications/application data shown in our catalogs and data sheets are intended only as a general guide for the product described (herein). Any specific application should not be undertaken without independent study, evaluation, and testing for suitability.*



Via Malavolti, 36 - 41122 Modena - ITALY - Phone +39 (059) 254895 - Fax +39 (059) 253512 - mail: tecnord@tecnord.com - **www.tecnord.com**

## PB-MCI MANUAL POPPET VALVE, 2 WAY NORMALLY CLOSED, PUSH TYPE

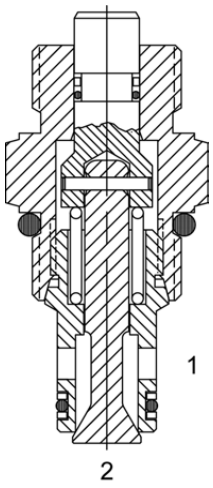


### DESCRIPTION

8 size, 3/4-16 thread, “Power” series, manual poppet, 2 way normally closed, push type valve.

### OPERATION

The PB-MCI blocks flow from (2) to (1) until sufficient force is applied to button to overcome spring bias and load force.

| Actuation Force Required | |
|---|---|
| No Pressure | 7 lbs |
| Side Pressure | 7 + (P1 x .009) |
| Nose Pressure | 7 + (P1 x .076) |

Note: (Ø .437) cavity predrill depth must be 1.312 minimum from spotface.

### FEATURES

- Hardened parts for long life.
- Industry common cavity.

### HYDRAULIC SYMBOL

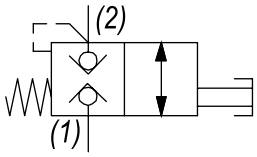


### PERFORMANCE

Actual Test Data (Cartridge Only)

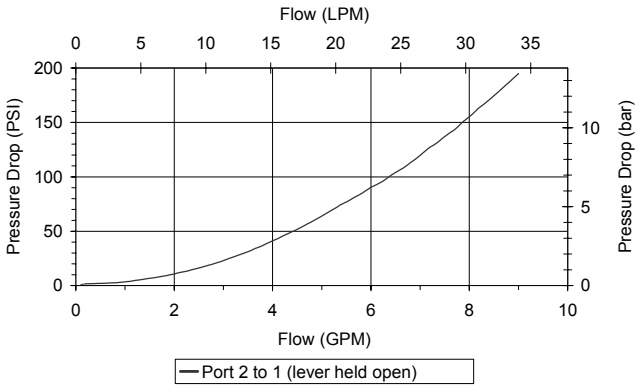


### VALVE SPECIFICATIONS

| | |
|---|---|
| Nominal Flow | 8 GPM (30 LPM) |
| Rated Operating Pressure | 3500 PSI (241 bar) |
| Typical Internal Leakage (150 SSU) | Consult Factory |
| Viscosity Range | 36 to 3000 SSU (3 to 647 cSt) |
| Filtration | ISO 18/16/13 |
| Media Operating Temp. Range | -40° to 250°F (-40° to 120°C) |
| Weight | .26 lbs (.12 kg) |
| Operating Fluid Media | General Purpose Hydraulic Fluid |
| Cartridge Torque Requirements | 25 ft-lbs (34 Nm) |
| Cavity | POWER 2W |
| Cavity Form Tool (Finishing) | 40500005 |
| Seal Kit | 21191102 |

**WARNING:** *the specifications/application data shown in our catalogs and data sheets are intended only as a general guide for the product described (herein). Any specific application should not be undertaken without independent study, evaluation, and testing for suitability.*



Via Malavolti, 36 - 41122 Modena - ITALY - Phone +39 (059) 254895 - Fax +39 (059) 253512 - mail: tecnord@tecnord.com - **www.tecnord.com**

## DIMENSIONS

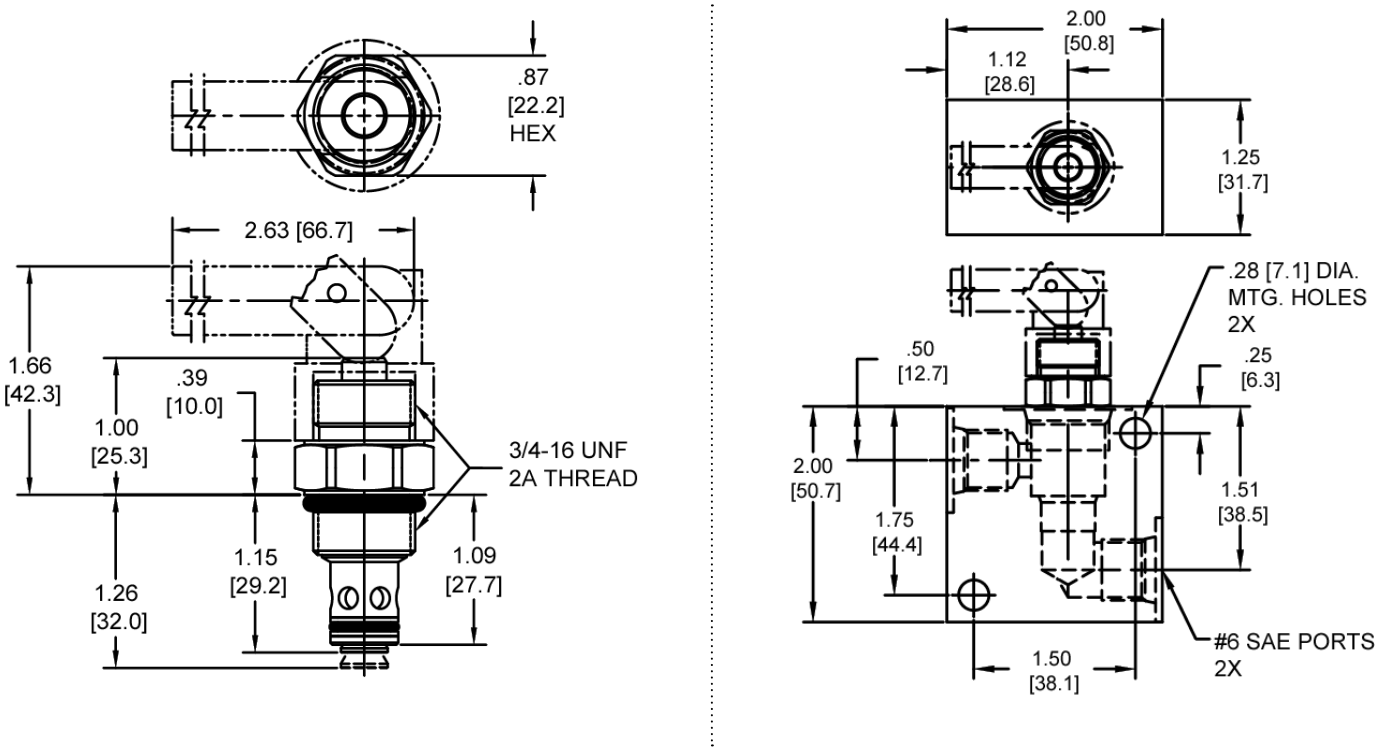


*Body Weight: .39 lbs (.18 kg)*

## ORDERING INFORMATION

**PB-MCI – ____ – ____**

| OPTIONS | | BODIES | |
|---|---|---|---|
| Buna Standard | **00** | **Blank** | Without Body |
| Viton Standard | **V0** | **N** | 1/4" NPTF Ports |
| Buna, Screen | **A0** | **S** | #6 SAE Ports |
| Viton, Screen | **W0** | | |
| Buna, Lever | **0L** | | |
| Viton, Lever | **VL** | | |
| Buna, Screen, Lever | **AL** | | |
| Viton, Screen, Lever | **WL** | | |

**Note: use screen only if flow direction is from (1) to (2).**

**WARNING:** *the specifications/application data shown in our catalogs and data sheets are intended only as a general guide for the product described (herein). Any specific application should not be undertaken without independent study, evaluation, and testing for suitability.*

## PB-MCL MANUAL POPPET VALVE, 2 WAY NORMALLY CLOSED, PULL TYPE, LEVER

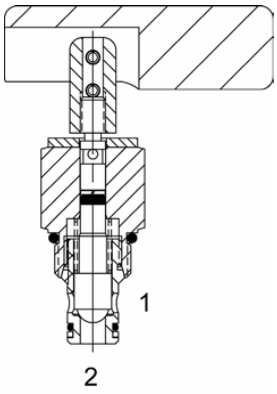


### DESCRIPTION

8 size, 3/4-16 thread, “Power” series, manual poppet, 2 way normally closed, pull type valve with lever.

### OPERATION

The PB-MCL blocks flow from (1) to (2) until an operator pulls the handle upward. The bias spring (see option page for pressure) allows for backpressure at (2) before the valve will open.
Note: Pressure at port (2) will directly act on the spool and spring. Port (2) is intended to be a tank port only.

### FEATURES

- Hardened parts for long life.
- Industry common cavity.

### HYDRAULIC SYMBOL

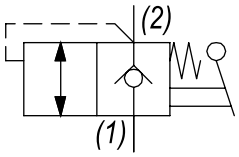


*Pressure above SPRING BIAS PRESSURE at port (2) may cause valve to self open.*

### PERFORMANCE

Actual Test Data (Cartridge Only)

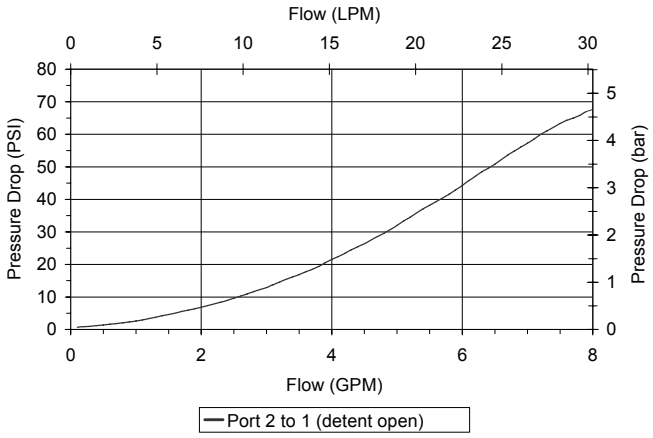


### VALVE SPECIFICATIONS

| | |
|---|---|
| Nominal Flow | 8 GPM (30 LTR/M) |
| Rated Operating Pressure | 3500 PSI (241 bar) |
| Typical Internal Leakage (150 SSU) | 0-5 drops/min |
| Viscosity Range | 36 to 3000 SSU (3 to 647 cSt) |
| Filtration | ISO 18/16/13 |
| Media Operating Temp. Range | -40° to 250°F (-40° to 120°C) |
| Weight | .33 lbs (.15 kg) |
| Operating Fluid Media | General Purpose Hydraulic Fluid |
| Cartridge Torque Requirements | 25 ft-lbs (34 Nm) |
| Cavity | POWER 2W |
| Cavity Form Tool (Finishing) | 40500005 |
| Seal Kit | 21191101 |

**WARNING:** *the specifications/application data shown in our catalogs and data sheets are intended only as a general guide for the product described (herein). Any specific application should not be undertaken without independent study, evaluation, and testing for suitability.*



Via Malavolti, 36 - 41122 Modena - ITALY - Phone +39 (059) 254895 - Fax +39 (059) 253512 - mail: tecnord@tecnord.com - **www.tecnord.com**

## DIMENSIONS

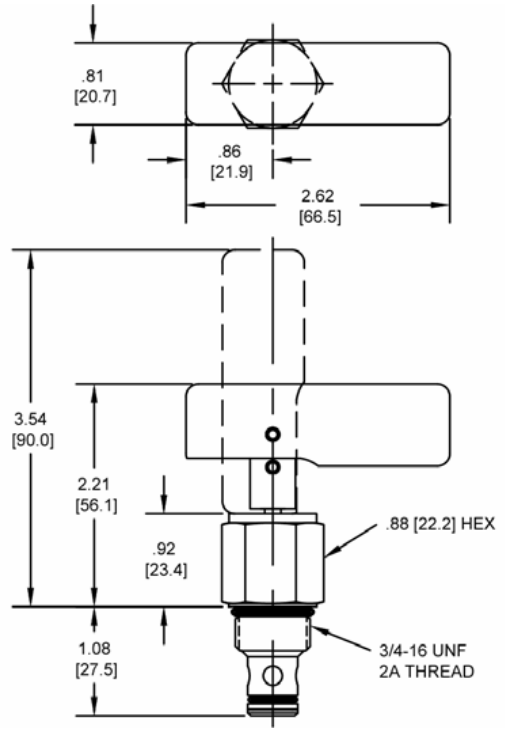


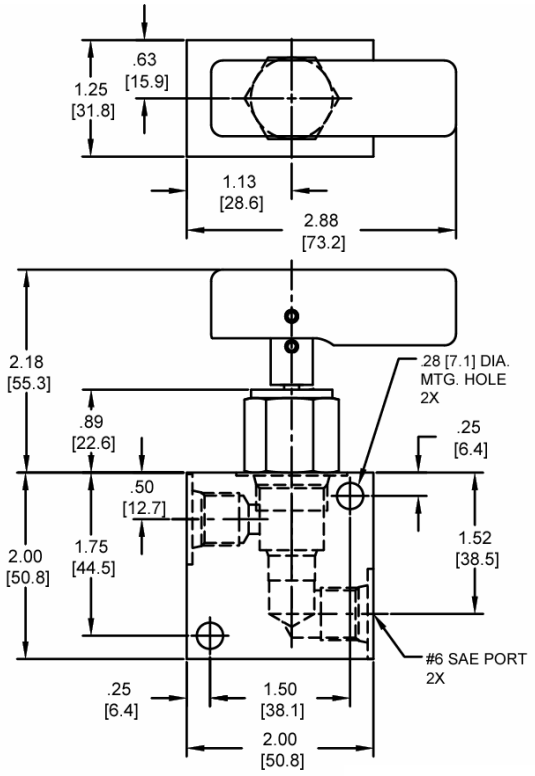


*Body Weight: .39 lbs (.18 kg)*

## ORDERING INFORMATION

**PB-MCL – _____ – _____ – _____**

**OPTIONS**

| | |
|---|---|
| Buna Standard | **00** |
| Viton Standard | **V0** |
| Buna, Screen | **A0** |
| Viton, Screen | **W0** |

**Note: use screen only if flow direction is from (1) to (2).**

**SPRING BIAS PRESSURE**

| | |
|---|---|
| **0075** | 75 PSI |
| **0150** | 150 PSI |

**Note: pressure above SPRING BIAS PRESSURE at port (2) may cause valve to self open.**

**BODIES**

| | |
|---|---|
| **Blank** | Without Body |
| **N** | 1/4" NPT Ports |
| **S** | #6 SAE Ports |

**WARNING:** *the specifications/application data shown in our catalogs and data sheets are intended only as a general guide for the product described (herein). Any specific application should not be undertaken without independent study, evaluation, and testing for suitability.*

## DE-MCL NORMALLY CLOSED MANUAL, PULL VALVE

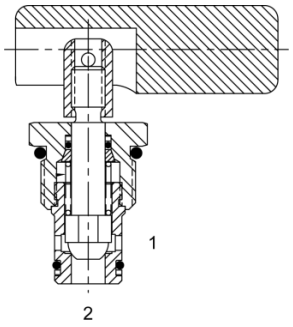


### DESCRIPTION

10 size, 7/8-14 thread, “Delta” series, normally closed, manual pull valve.

### OPERATION

The DE-MCL blocks flow from (1) to (2) until an operator pulls the shaft outward. The bias spring allows for backpressure at (2) before the valve will open (see option page for pressure).
Note: pressure at port (2) will directly act on the spool and spring. Port (2) is intended to be a tank port only. The cartridge offers smooth transition in response to load changes in common hydraulic circuits.

### FEATURES

- Hardened parts for long life.
- Industry common cavity.

### HYDRAULIC SYMBOL

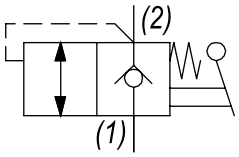


*Pressure above SPRING BIAS PRESSURE at port (2) may cause valve to self open.*

### PERFORMANCE

Actual Test Data (Cartridge Only)

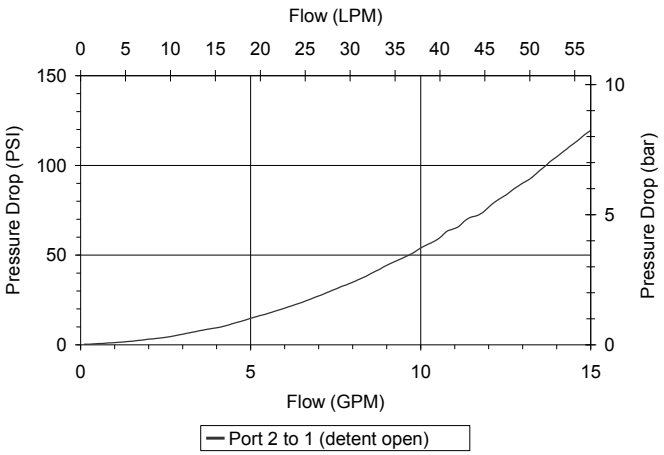


### VALVE SPECIFICATIONS

| | |
|---|---|
| Nominal Flow | 15 GPM (57 LPM) |
| Rated Operating Pressure | 3500 PSI (241 bar) |
| Typical Internal Leakage (150 SSU) | 5 drops/min (82 ml/min) |
| Viscosity Range | 36 to 3000 SSU (3 to 647 cSt) |
| Filtration | ISO 18/16/13 |
| Media Operating Temp. Range | -40° to 250°F (-40° to 120°C) |
| Weight | .15 lbs (.07 kg) |
| Operating Fluid Media | General Purpose Hydraulic Fluid |
| Cartridge Torque Requirements | 30 ft-lbs (40.6 Nm) |
| Cavity | DELTA 2W |
| Cavity Form Tool (Finishing) | 40500000 |
| Seal Kit | 21191201 |

**WARNING:** *the specifications/application data shown in our catalogs and data sheets are intended only as a general guide for the product described (herein). Any specific application should not be undertaken without independent study, evaluation, and testing for suitability.*



Via Malavolti, 36 - 41122 Modena - ITALY - Phone +39 (059) 254895 - Fax +39 (059) 253512 - mail: tecnord@tecnord.com - **www.tecnord.com**

## DIMENSIONS

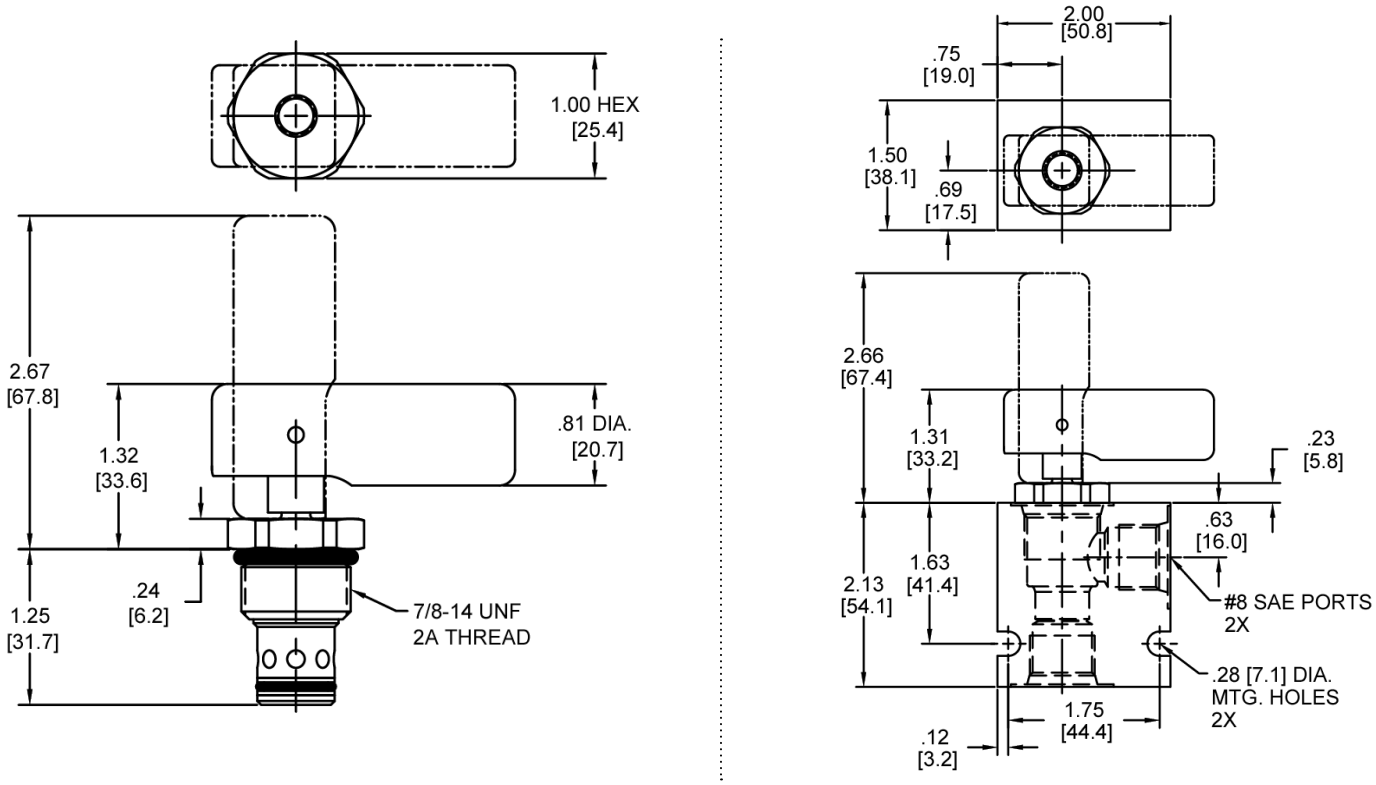


*Body Weight: .47 lbs (.21 kg)*

## ORDERING INFORMATION

**DE-MCL – ____ – ____ – ____**

**OPTIONS**

| | |
|---|---|
| Buna Standard | **00** |
| Viton Standard | **V0** |
| Buna, Screen | **A0** |
| Viton, Screen | **W0** |

**Note: use screen only if flow direction is from (1) to (2).**

**SPRING BIAS PRESSURE**

| | |
|---|---|
| **0065** | 65 PSI |
| **0160** | 165 PSI |

**Note: pressure above SPRING BIAS PRESSURE at port (2) may cause valve to self open.**

**BODIES**

| | |
|---|---|
| **Blank** | Without Body |
| **N** | 3/8” NPTF Ports |
| **S** | #8 SAE Ports |

**WARNING:** *the specifications/application data shown in our catalogs and data sheets are intended only as a general guide for the product described (herein). Any specific application should not be undertaken without independent study, evaluation, and testing for suitability.*

## DE-M2G MANUAL ROTARY SPOOL VALVE, 2 WAY NORMALLY CLOSED

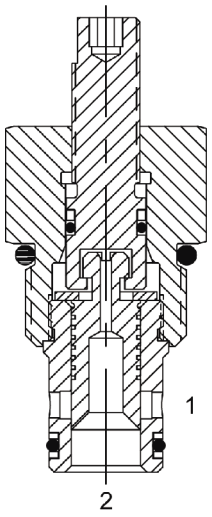


### DESCRIPTION

10 size, 7/8-14 thread, “Delta” series, manual rotary spool valve, 2 way normally closed.

### OPERATION

The DE-M2G when rotated clockwise (fully closed position) blocks flow from (1) to (2) and (2) to (1). When rotated counterclockwise (fully open position), the cartridge allows flow from (1) to (2) and (2) to (1).

### FEATURES

- Hardened parts for long life.
- Industry common cavity.

### HYDRAULIC SYMBOL

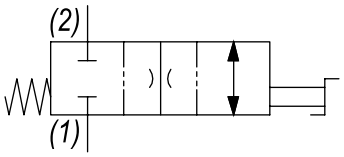


*May be used as a metering product. Valve has approximately 3.5 turns of adjustment from fully open to fully closed. See Chart for fully open pressure drop.*

### PERFORMANCE

Actual Test Data (Cartridge Only)

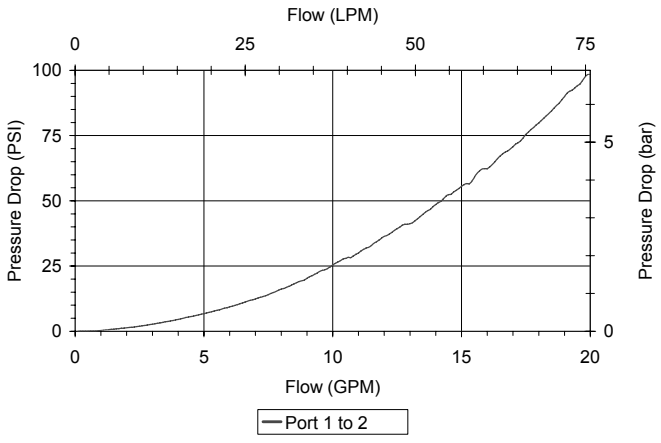


### VALVE SPECIFICATIONS

| | |
|---|---|
| Nominal Flow | 20 GPM (76 LPM) |
| Rated Operating Pressure | 3000 PSI (207 bar) |
| Typical Internal Leakage (150 SSU) | 5 cu/in per min (82 ml/min) |
| Viscosity Range | 36 to 3000 SSU (3 to 647 cSt) |
| Filtration | ISO 18/16/13 |
| Media Operating Temp. Range | -40° to 250°F (-40° to 120°C) |
| Weight | .27 lbs (.12 kg) |
| Operating Fluid Media | General Purpose Hydraulic Fluid |
| Cartridge Torque Requirements | 30 ft-lbs (40.6 Nm) |
| Cavity | DELTA 2W |
| Cavity Form Tool (Finishing) | 40500000 |
| Seal Kit | 21191202 |

**WARNING:** *the specifications/application data shown in our catalogs and data sheets are intended only as a general guide for the product described (herein). Any specific application should not be undertaken without independent study, evaluation, and testing for suitability.*



Via Malavolti, 36 - 41122 Modena - ITALY - Phone +39 (059) 254895 - Fax +39 (059) 253512 - mail: tecnord@tecnord.com - **www.tecnord.com**

## DIMENSIONS

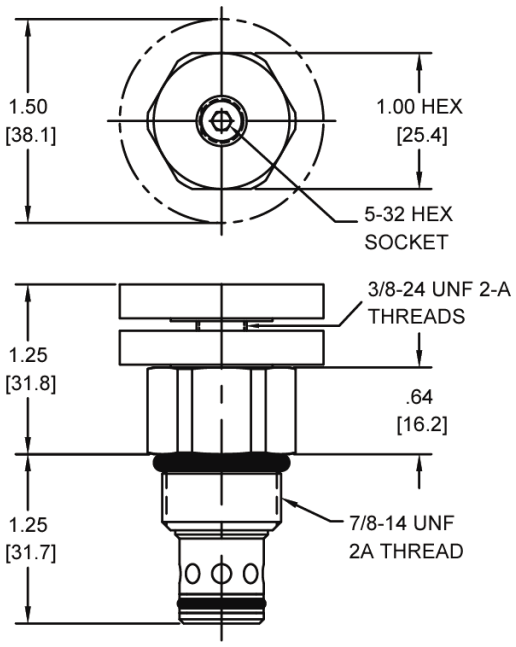


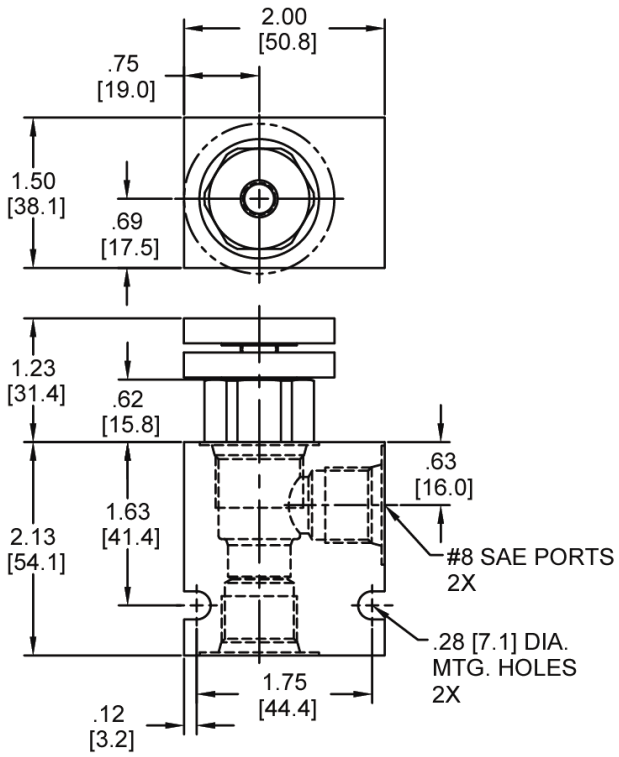


*Body Weight: .47 lbs (.21 kg)*

## ORDERING INFORMATION

**DE-M2G – _____ – _____**

| OPTIONS | |
|---|---|
| Buna Standard | **00** |
| Viton Standard | **V0** |
| Buna, Screen | **A0** |
| Viton, Screen | **W0** |
| Buna, Knob | **0K** |
| Viton, Knob | **VK** |
| Buna, Knob, Screen | **AK** |
| Viton, Knob, Screen | **WK** |

| BODIES | |
|---|---|
| **Blank** | Without Body |
| **N** | 3/8" NPTF Ports |
| **S** | #8 SAE Ports |

**Note: use screen only if flow direction is from (1) to (2).**

**WARNING:** *the specifications/application data shown in our catalogs and data sheets are intended only as a general guide for the product described (herein). Any specific application should not be undertaken without independent study, evaluation, and testing for suitability.*



Via Malavolti, 36 - 41122 Modena - ITALY - Phone +39 (059) 254895 - Fax +39 (059) 253512 - mail: tecnord@tecnord.com - **www.tecnord.com**

## HB-MCP 2 WAY MANUAL VALVE, NORMALLY CLOSED, PUSH TYPE

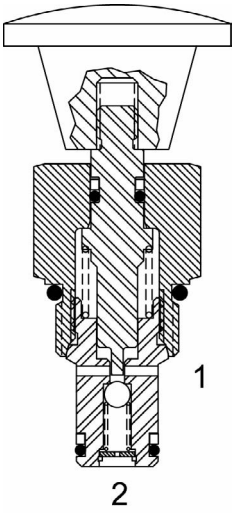


### DESCRIPTION

8 size, 3/4-16 thread, “Power” series, manual valve, 2 way normally closed, push type.

### OPERATION

The HB-MCP blocks flow from (2) to (1) until an operator pushes the knob in allowing pressure at port #2 to drop to port #1 pressure.

### FEATURES

- Hardened parts for long life.
- Industry common cavity.

### HYDRAULIC SYMBOL

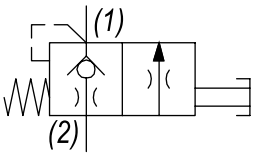


*Good as a pilot dump valve. Port #1 should be limited to <500 PSI to allow actuation (50 lbs), Port #2 actuation load at 4000 PSI (50 lbs).*

### PERFORMANCE

Actual Test Data (Cartridge Only)

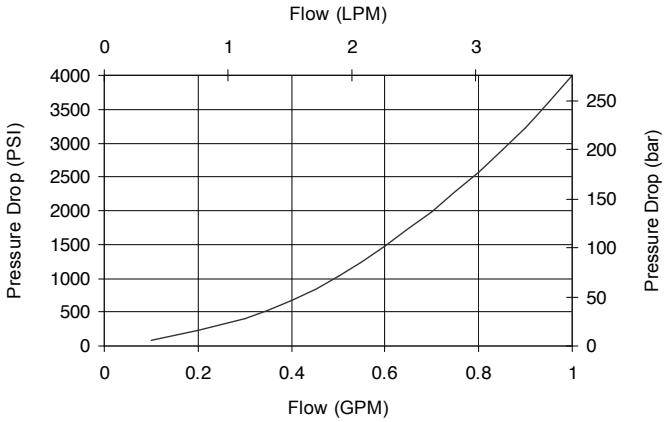


### VALVE SPECIFICATIONS

| | |
|---|---|
| Nominal Flow | 1 GPM (4 LPM) |
| Max. Operating Pressure | 4000 PSI (276 bar) |
| Typical Internal Leakage (150 SSU) | 5 drops/min |
| Viscosity Range | 36 to 3000 SSU (3 to 647 cSt) |
| Filtration | ISO 18/16/13 |
| Media Operating Temp. Range | 32° to 160°F (0° to 70°C) |
| Weight | .14 lbs (.06 kg) |
| Operating Fluid Media | General Purpose Hydraulic Fluid |
| Cartridge Torque Requirements | 25 ft-lbs (34 Nm) |
| Cavity | POWER 2W |
| Cavity Form Tool (Finishing) | 40500005 |
| Seal Kit | 21191100 |

**WARNING:** *the specifications/application data shown in our catalogs and data sheets are intended only as a general guide for the product described (herein). Any specific application should not be undertaken without independent study, evaluation, and testing for suitability.*



Via Malavolti, 36 - 41122 Modena - ITALY - Phone +39 (059) 254895 - Fax +39 (059) 253512 - mail: tecnord@tecnord.com - **www.tecnord.com**

## DIMENSIONS

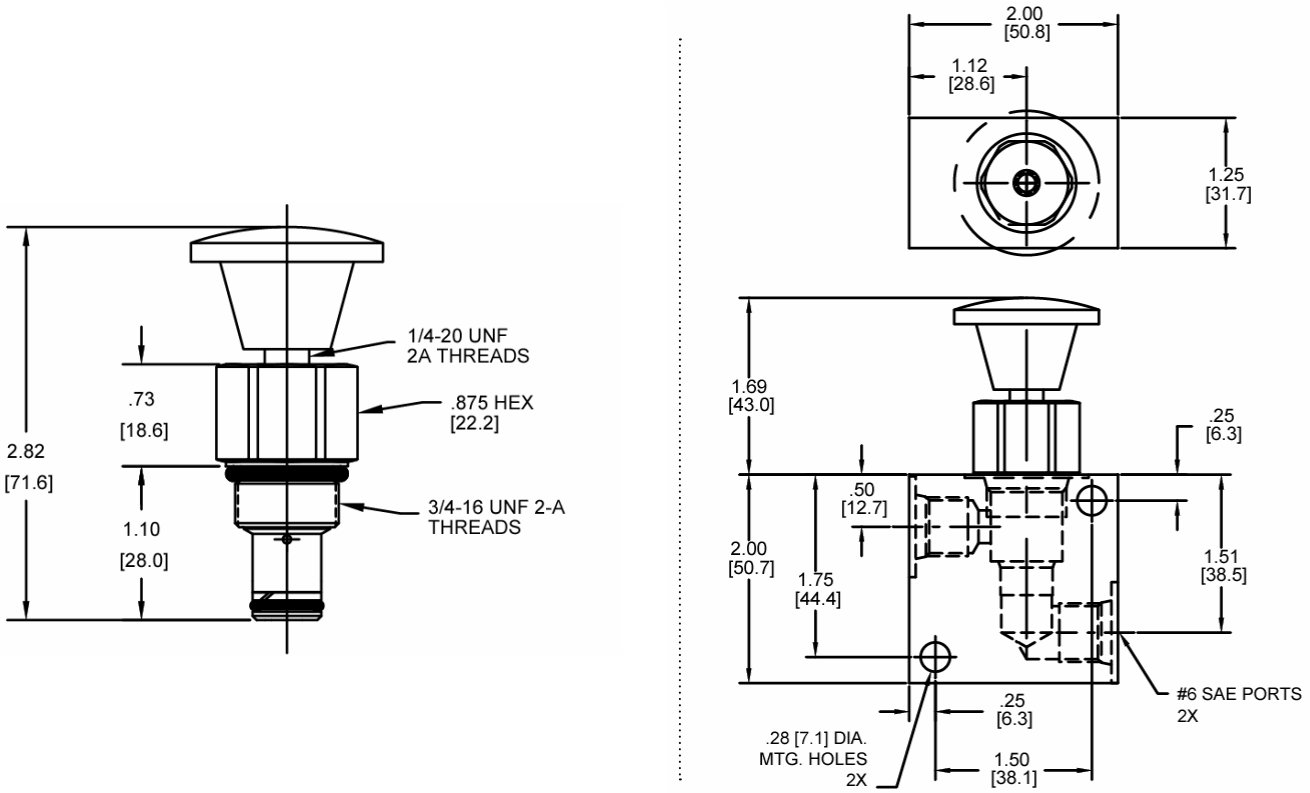


*Body Weight: .39 lbs (.18 kg)*

## ORDERING INFORMATION

**HB-MCP – ____ – ____**

| **OPTIONS** | | **BODIES** | |
|---|---|---|---|
| Buna, Knob | **0K** | **Blank** | Without Body |
| Viton, Knob | **VK** | **N** | 1/4" NPTF Ports |
| | | **S** | #6 SAE Ports |

**Note: aluminum NOT durability rated for 4000 PSI.**
**Consult factory for options.**

W 50/ 2022

**WARNING:** *the specifications/application data shown in our catalogs and data sheets are intended only as a general guide for the product described (herein). Any specific application should not be undertaken without independent study, evaluation, and testing for suitability.*

**WARNING:** *the specifications/application data shown in our catalogs and data sheets are intended only as a general guide for the product described (herein). Any specific application should not be undertaken without independent study, evaluation, and testing for suitability.*



Via Malavolti, 36 - 41122 Modena - ITALY - Phone +39 (059) 254895 - Fax +39 (059) 253512 - mail: tecnord@tecnord.com - **www.tecnord.com**

## PILOT TO SHIFT VALVES

| | GPM | PSI | LPM | BAR | CAVITY | MODEL | PAGE |
|---|---|---|---|---|---|---|---|
| 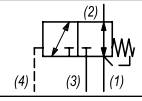 | 10 | 4000 | 38 | 276 | 7/8-14 | **HG-PDA** | MD78 |
| 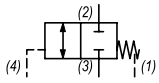 | 10 | 4000 | 38 | 276 | 7/8-14 | **HG-PDC** | MD80 |
| 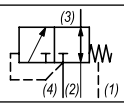 | 10 | 3000 | 38 | 207 | 7/8-14 | **DG-PDI** | MD82 |
| 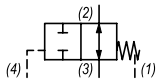 | 10 | 4000 | 38 | 276 | 7/8-14 | **HG-PDO** | MD84 |
| 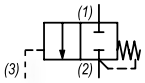 | 10 | 4000 | 38 | 276 | 7/8-14 | **HF-PDE** | MD86 |
| 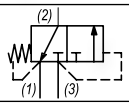 | 10 | 3000 | 38 | 207 | 7/8-14 | **DF-PDI** | MD88 |
| 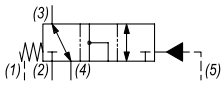 | 40 | 3500 | 151 | 241 | 1 5/16 | **SO-PTS** | MD90 |
| 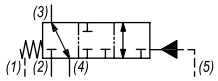 | 40 | 3500 | 151 | 241 | 1 5/16 | **SO-PTT** | MD92 |

**WARNING:** *the specifications/application data shown in our catalogs and data sheets are intended only as a general guide for the product described (herein). Any specific application should not be undertaken without independent study, evaluation, and testing for suitability.*



Via Malavolti, 36 - 41122 Modena - ITALY - Phone +39 (059) 254895 - Fax +39 (059) 253512 - mail: tecnord@tecnord.com - **www.tecnord.com**

## HG-PDA PILOTED DIRECTIONAL VALVE, 4 WAY NORMALLY CLOSED

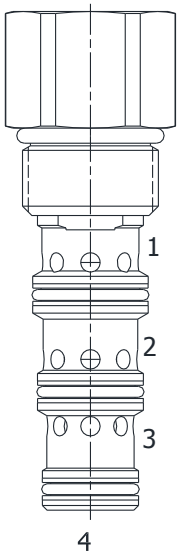


### DESCRIPTION

10 size, 7/8-14 thread, “Delta” series, 4 way piloted directional valve.

### OPERATION

The HG-PDA in neutral (un-piloted), allows flow between (2) and (1) bi-directionally, while blocking at (3). The spring chamber is constantly vented at (1). On attainment of a predetermined pressure at (4), the cartridge redirects flow from (2) to (1), to (2) to (3).

Note: that the backpressure value at (1) must be added to the selected pressure setting to determine pilot pressure necessary to shift valve to second position.

### FEATURES

- Hardened parts for long life.
- Industry common cavity

### HYDRAULIC SYMBOL

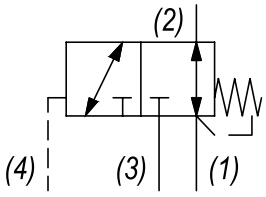


*.030 to .060 diameter orifice recommended beneath port (4).*

### PERFORMANCE

Actual Test Data (Cartridge Only)

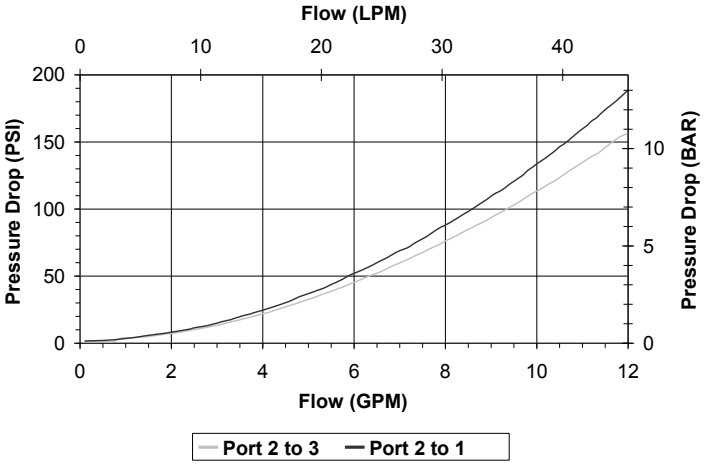


### VALVE SPECIFICATIONS

| | |
|---|---|
| Nominal Flow | 10 GPM (38 LTR/M) |
| Rated Operating Pressure | 4000 PSI (276 bar) |
| Typical Internal Leakage (150 SSU) | 8 cu in/min (82 ml/min) |
| Viscosity Range | 36 to 3000 SSU (3 to 647 cSt) |
| Filtration | ISO 18/16/13 |
| Media Operating Temp. Range | -40° to 250°F (-40° to 120°C) |
| Weight | .63 lbs (.28 kg) |
| Operating Fluid Media | General Purpose Hydraulic Fluid |
| Cartridge Torque Requirements | 40 ft-lbs (40.6 Nm) |
| Cavity | DELTA 4W |
| Cavity Form Tool (Finishing) | 40500002 |
| Seal Kit | 21191214 |

**WARNING:** *the specifications/application data shown in our catalogs and data sheets are intended only as a general guide for the product described (herein). Any specific application should not be undertaken without independent study, evaluation, and testing for suitability.*



Via Malavolti, 36 - 41122 Modena - ITALY - Phone +39 (059) 254895 - Fax +39 (059) 253512 - mail: tecnord@tecnord.com - **www.tecnord.com**

## DIMENSIONS

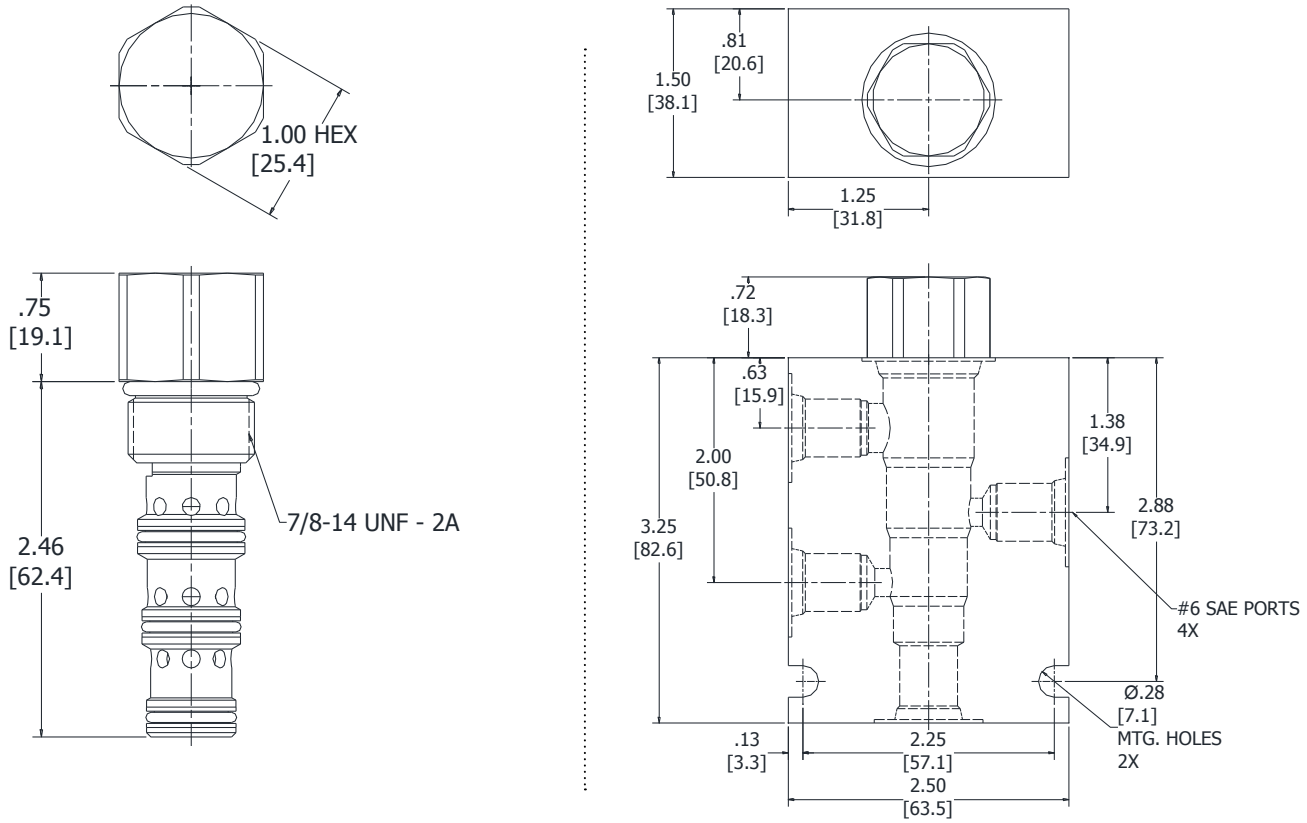


*Body Weight: .99 lbs (.45 kg)*

## ORDERING INFORMATION

**HG-PDA – ____ – ____ – ____**

**OPTIONS**

| | |
|---|---|
| Buna Standard | **00** |
| Viton Standard | **V0** |

**PRESSURE SETTINGS**

| | |
|---|---|
| **0040** | 40 PSI |
| **0080** | 80 PSI |
| **0160** | 160 PSI |

**BODIES**

| | |
|---|---|
| **Blank** | Without Body |
| **N** | 1/4” NPTF Ports |
| **S** | #6 SAE Ports |

**WARNING:** *the specifications/application data shown in our catalogs and data sheets are intended only as a general guide for the product described (herein). Any specific application should not be undertaken without independent study, evaluation, and testing for suitability.*



Via Malavolti, 36 - 41122 Modena - ITALY - Phone +39 (059) 254895 - Fax +39 (059) 253512 - mail: tecnord@tecnord.com - **www.tecnord.com**

## HG-PDC PILOTED DIRECTIONAL VALVE, 2 WAY NORMALLY CLOSED

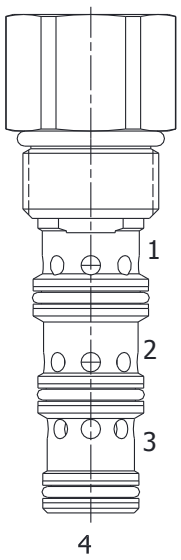


### DESCRIPTION

10 size, 7/8-14 thread, “Delta” series, 2 way normally closed piloted directional valve.

### OPERATION

The HG-PDC in neutral (unpiloted), blocks flow between (2) and (3). The spring chamber is constantly vented at (1). On attainment of a predetermined pressure at (4), the cartridge allows flow from (2) to (3).

Note: that the backpressure value at (1) must be added to the selected pressure setting to determine pilot pressure necessary to shift valve to second position.

### FEATURES

- Hardened parts for long life.
- Industry common cavity

### HYDRAULIC SYMBOL

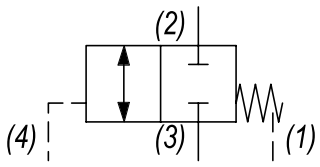


*.030 to .060 diameter orifice recommended beneath port (4).*

### PERFORMANCE

Actual Test Data (Cartridge Only)

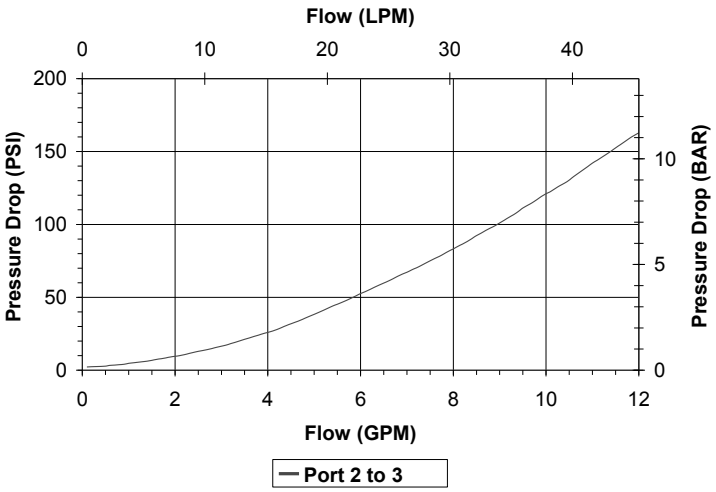


### VALVE SPECIFICATIONS

| | |
|---|---|
| Nominal Flow | 10 GPM (38 LPM) |
| Rated Operating Pressure | 4000 PSI (276 bar) |
| Typical Internal Leakage (150 SSU) | 8 cu in/min (82 ml/min) |
| Viscosity Range | 36 to 3000 SSU (3 to 647 cSt) |
| Filtration | ISO 18/16/13 |
| Media Operating Temp. Range | -40° to 250°F (-40° to 120°C) |
| Weight | .63 lbs (.28 kg) |
| Operating Fluid Media | General Purpose Hydraulic Fluid |
| Cartridge Torque Requirements | 40 ft-lbs (40.6 Nm) |
| Cavity | DELTA 4W |
| Cavity Form Tool (Finishing) | 40500002 |
| Seal Kit | 21191214 |

**WARNING:** *the specifications/application data shown in our catalogs and data sheets are intended only as a general guide for the product described (herein). Any specific application should not be undertaken without independent study, evaluation, and testing for suitability.*



Via Malavolti, 36 - 41122 Modena - ITALY - Phone +39 (059) 254895 - Fax +39 (059) 253512 - mail: tecnord@tecnord.com - **www.tecnord.com**

## DIMENSIONS

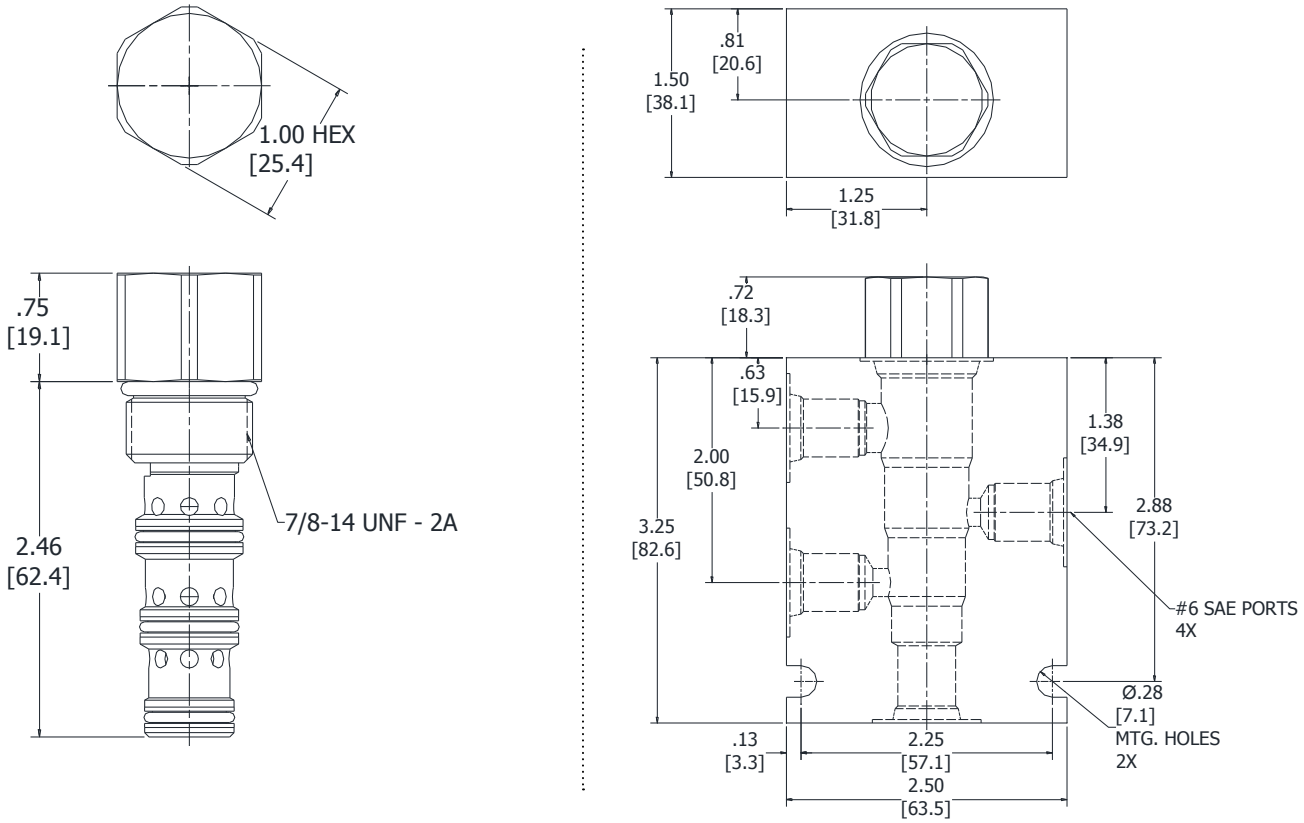


*Body Weight: .99 lbs (.45 kg)*

## ORDERING INFORMATION

**HG-PDC – ____ – ____ – ____**

**OPTIONS**

| | |
|---|---|
| Buna Standard | **00** |
| Viton Standard | **V0** |

**PRESSURE SETTINGS**

| | |
|---|---|
| **0040** | 40 PSI |
| **0080** | 80 PSI |
| **0160** | 160 PSI |

**BODIES**

| | |
|---|---|
| **Blank** | Without Body |
| **N** | 1/4” NPTF Ports |
| **S** | #6 SAE Ports |

**WARNING:** *the specifications/application data shown in our catalogs and data sheets are intended only as a general guide for the product described (herein). Any specific application should not be undertaken without independent study, evaluation, and testing for suitability.*



Via Malavolti, 36 - 41122 Modena - ITALY - Phone +39 (059) 254895 - Fax +39 (059) 253512 - mail: tecnord@tecnord.com - **www.tecnord.com**

## DG-PDI PILOTED DIRECTIONAL VALVE, 3 WAY NORMALLY OPEN

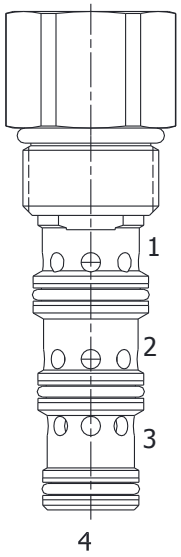


### DESCRIPTION

10 size, 7/8-14 thread, “Delta” series, 3 way normally open piloted directional valve.

### OPERATION

The DG-PDI in neutral (un-piloted), allows flow between (3) and (2) bidirectional, while blocking at (4). The spring chamber is constantly vented at (1). On attainment of a predetermined pressure at (4), the cartridge shifts to close (3) to (2), while opening (4) to (3).

Note: that the backpressure value at (1) must be added to the selected pressure setting to determine pilot pressure necessary to shift valve to second position.

### FEATURES

- Hardened parts for long life.
- Industry common cavity

### HYDRAULIC SYMBOL

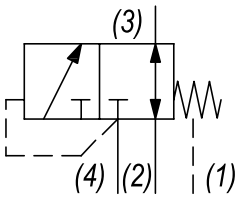


### PERFORMANCE

Actual Test Data (Cartridge Only)

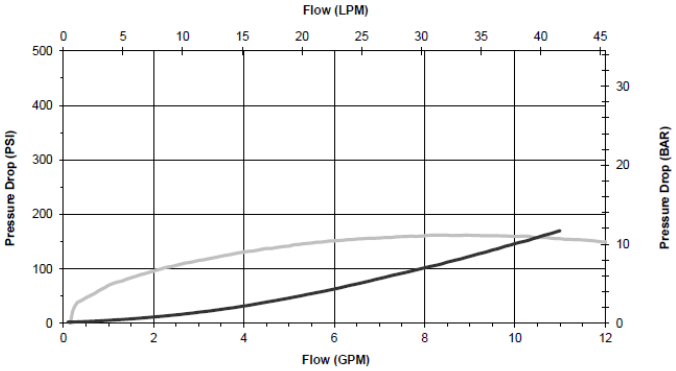


### VALVE SPECIFICATIONS

| | |
|---|---|
| Nominal Flow | 10 GPM (38 LTR/M) |
| Rated Operating Pressure | 3000 PSI (207 bar) |
| Typical Internal Leakage (150 SSU) | 5 cu in/min (82 ml/min) |
| Viscosity Range | 36 to 3000 SSU (3 to 647 cSt) |
| Filtration | ISO 18/16/13 |
| Media Operating Temp. Range | -40° to 250°F (-40° to 120°C) |
| Weight | .63 lbs (.28 kg) |
| Operating Fluid Media | General Purpose Hydraulic Fluid |
| Cartridge Torque Requirements | 30 ft-lbs (40.6 Nm) |
| Cavity | DELTA 4W |
| Cavity Form Tool (Finishing) | 40500002 |
| Seal Kit | 21191214 |

**WARNING:** *the specifications/application data shown in our catalogs and data sheets are intended only as a general guide for the product described (herein). Any specific application should not be undertaken without independent study, evaluation, and testing for suitability.*



Via Malavolti, 36 - 41122 Modena - ITALY - Phone +39 (059) 254895 - Fax +39 (059) 253512 - mail: tecnord@tecnord.com - **www.tecnord.com**

## DIMENSIONS

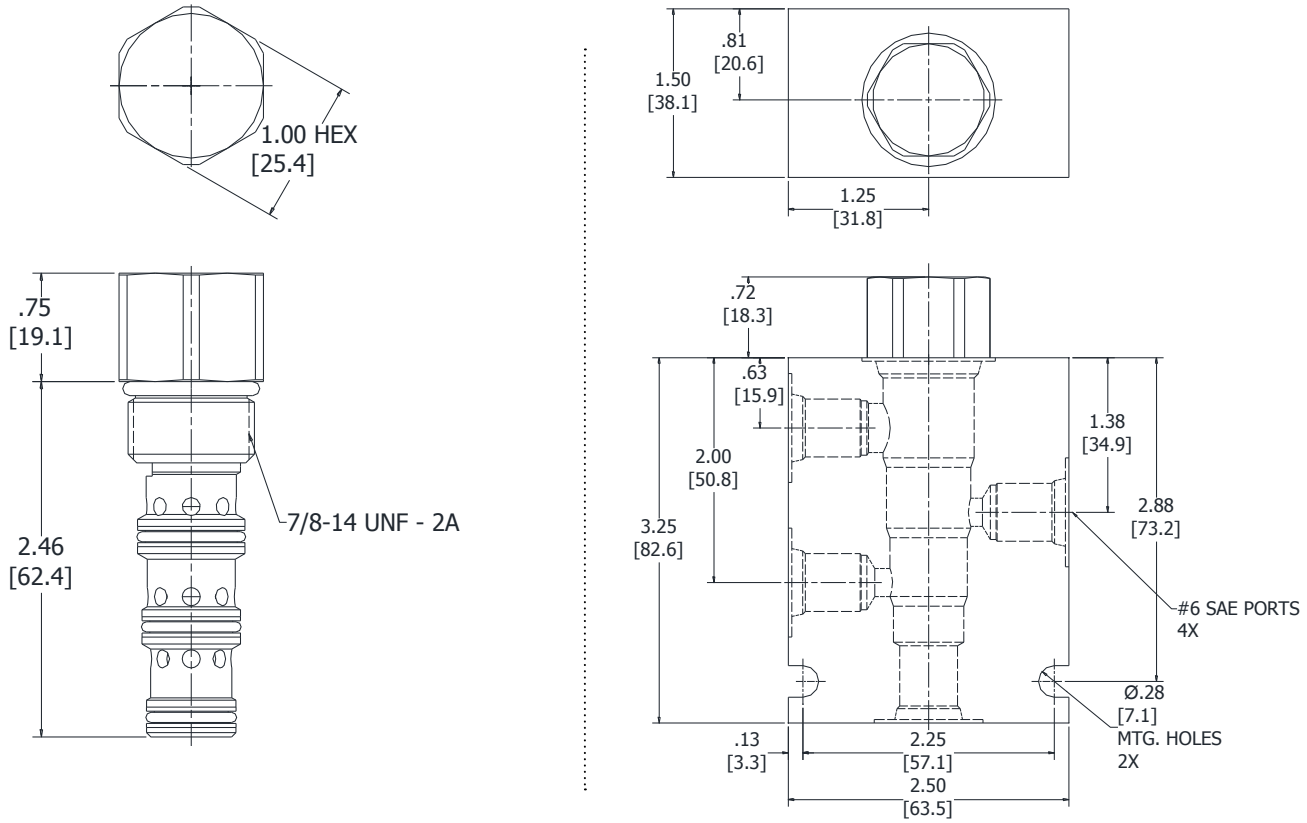


*Body Weight: .99 lbs (.45 kg)*

## ORDERING INFORMATION

**DG-PDI – ____ – ____ – ____**

**OPTIONS**

| | |
|---|---|
| Buna Standard | **00** |
| Viton Standard | **V0** |

**PRESSURE SETTINGS**

| | |
|---|---|
| **0055** | 55 PSI |
| **0080** | 80 PSI |
| **0160** | 160 PSI |

**BODIES**

| | |
|---|---|
| **Blank** | Without Body |
| **N** | 1/4” NPTF Ports |
| **S** | #6 SAE Ports |

**WARNING:** *the specifications/application data shown in our catalogs and data sheets are intended only as a general guide for the product described (herein). Any specific application should not be undertaken without independent study, evaluation, and testing for suitability.*



Via Malavolti, 36 - 41122 Modena - ITALY - Phone +39 (059) 254895 - Fax +39 (059) 253512 - mail: tecnord@tecnord.com - **www.tecnord.com**

## HG-PDO PILOTED DIRECTIONAL VALVE, 2 WAY NORMALLY OPEN

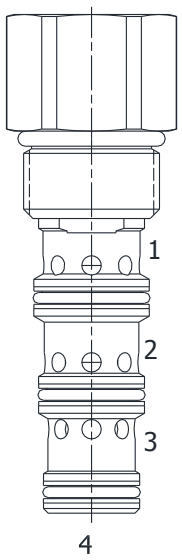


### DESCRIPTION

10 size, 7/8-14 thread, “Delta” series, 2 way normally open piloted directional valve.

### OPERATION

The HG-PDO in neutral (un-piloted), allows flow between (2) and (3) bi-directionally.
The spring chamber is constantly vented at (1). On attainment of a predetermined pressure at (4), the cartridge blocks flow from (2) to (3).

Note: that the backpressure value at (1) must be added to the selected pressure setting to determine pilot pressure necessary to shift valve to second position.

### FEATURES

- Hardened parts for long life.
- Industry common cavity

### HYDRAULIC SYMBOL

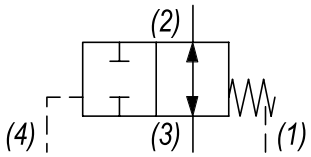


*.030 to .060 diameter orifice recommended beneath port (4).*

### PERFORMANCE

Actual Test Data (Cartridge Only)

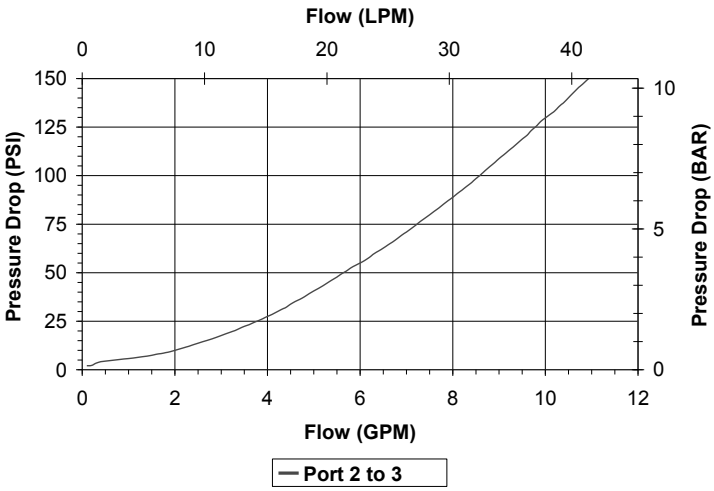


### VALVE SPECIFICATIONS

| | |
|---|---|
| Nominal Flow | 10 GPM (38 LTR/M) |
| Rated Operating Pressure | 4000 PSI (276 bar) |
| Typical Internal Leakage (150 SSU) | 8 cu in/min (82 ml/min) |
| Viscosity Range | 36 to 3000 SSU (3 to 647 cSt) |
| Filtration | ISO 18/16/13 |
| Media Operating Temp. Range | -40° to 250°F (-40° to 120°C) |
| Weight | .62 lbs (.28 kg) |
| Operating Fluid Media | General Purpose Hydraulic Fluid |
| Cartridge Torque Requirements | 40 ft-lbs (40.6 Nm) |
| Cavity | DELTA 4W |
| Cavity Form Tool (Finishing) | 40500002 |
| Seal Kit | 21191214 |

**WARNING:** *the specifications/application data shown in our catalogs and data sheets are intended only as a general guide for the product described (herein). Any specific application should not be undertaken without independent study, evaluation, and testing for suitability.*



Via Malavolti, 36 - 41122 Modena - ITALY - Phone +39 (059) 254895 - Fax +39 (059) 253512 - mail: tecnord@tecnord.com - **www.tecnord.com**

## DIMENSIONS

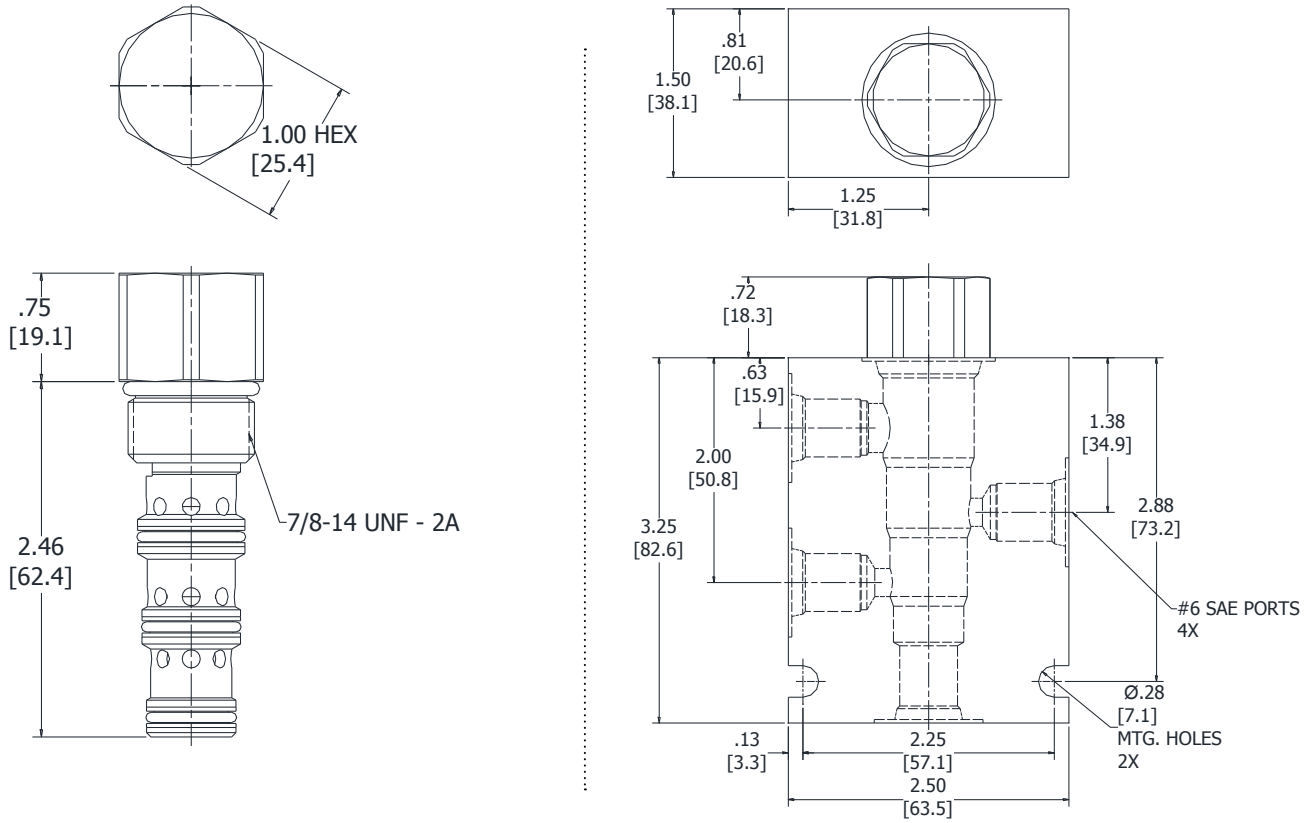


*Body Weight: .99 lbs (.45 kg)*

## ORDERING INFORMATION

**HG-PDO – ____ – ____ – ____**

**OPTIONS**

| | |
|---|---|
| Buna Standard | **00** |
| Viton Standard | **V0** |

**PRESSURE SETTINGS**

| | |
|---|---|
| **0040** | 40 PSI |
| **0080** | 80 PSI |
| **0160** | 160 PSI |

**BODIES**

| | |
|---|---|
| **Blank** | Without Body |
| **N** | 1/4” NPTF Ports |
| **S** | #6 SAE Ports |

**WARNING:** *the specifications/application data shown in our catalogs and data sheets are intended only as a general guide for the product described (herein). Any specific application should not be undertaken without independent study, evaluation, and testing for suitability.*



Via Malavolti, 36 - 41122 Modena - ITALY - Phone +39 (059) 254895 - Fax +39 (059) 253512 - mail: tecnord@tecnord.com - **www.tecnord.com**

## HF-PDE PILOTED DIRECTIONAL VALVE, NORMALLY CLOSED, EXTERNAL PILOT

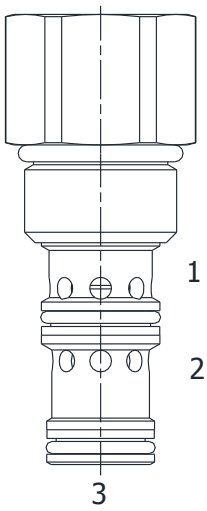


### DESCRIPTION

10 size, 7/8-14 thread, “Delta” series, external pilot normally closed, piloted directional valve.

### OPERATION

The HF-PDE blocks flow at ports (2) and (1). On attainment of a predetermined pressure at (3) the valve shifts to a allow flow from (1) to (2).

### FEATURES

- Hardened parts for long life.
- Industry common cavity

### HYDRAULIC SYMBOL

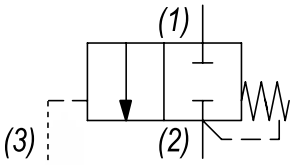


*.030 to .060 diameter orifice recommended beneath port (3).*

### PERFORMANCE

Actual Test Data (Cartridge Only)

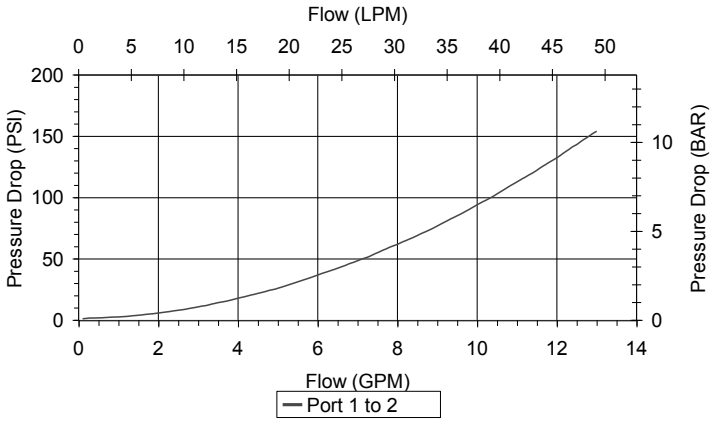


### VALVE SPECIFICATIONS

| | |
|---|---|
| Nominal Flow | 10 GPM (38 LPM) |
| Rated Operating Pressure | 4000 PSI (276 bar) |
| Typical Internal Leakage (150 SSU) | 8 cu in/min (82 ml/min) |
| Viscosity Range | 36 to 3000 SSU (3 to 647 cSt) |
| Filtration | ISO 18/16/13 |
| Media Operating Temp. Range | -40° to 250°F (-40° to 120°C) |
| Weight | .57 lbs (.26 kg) |
| Operating Fluid Media | General Purpose Hydraulic Fluid |
| Cartridge Torque Requirements | 40 ft-lbs (40.6 Nm) |
| Cavity | DELTA 3W |
| Cavity Form Tool (Finishing) | 40500001 |
| Seal Kit | 21191206 |

**WARNING:** *the specifications/application data shown in our catalogs and data sheets are intended only as a general guide for the product described (herein). Any specific application should not be undertaken without independent study, evaluation, and testing for suitability.*



Via Malavolti, 36 - 41122 Modena - ITALY - Phone +39 (059) 254895 - Fax +39 (059) 253512 - mail: tecnord@tecnord.com - **www.tecnord.com**

## DIMENSIONS

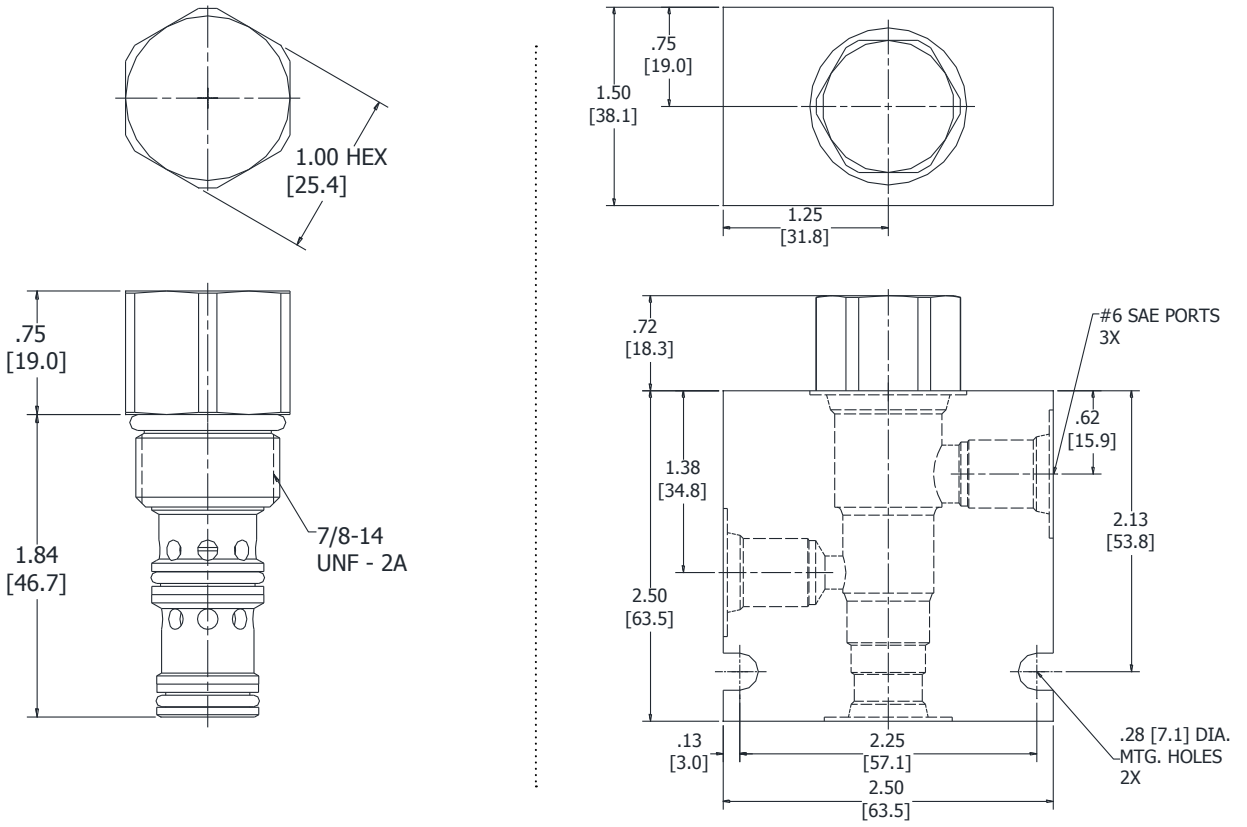


*Body Weight: .99 lbs (.45 kg)*

## ORDERING INFORMATION

**HF-PDE – ____ – ____ – ____**

**OPTIONS**

| | |
|---|---|
| Buna Standard | **00** |
| Viton Standard | **V0** |

**PRESSURE SETTINGS**

| | |
|---|---|
| **0050** | 50 PSI |
| **0095** | 95 PSI |
| **0165** | 165 PSI |

**BODIES**

| | |
|---|---|
| **Blank** | Without Body |
| **N** | 1/4" NPTF Ports |
| **S** | #6 SAE Ports |

**WARNING:** *the specifications/application data shown in our catalogs and data sheets are intended only as a general guide for the product described (herein). Any specific application should not be undertaken without independent study, evaluation, and testing for suitability.*



Via Malavolti, 36 - 41122 Modena - ITALY - Phone +39 (059) 254895 - Fax +39 (059) 253512 - mail: tecnord@tecnord.com - **www.tecnord.com**

## DF-PDI PILOTED DIRECTIONAL VALVE, INTERNAL PILOT AND DRAIN

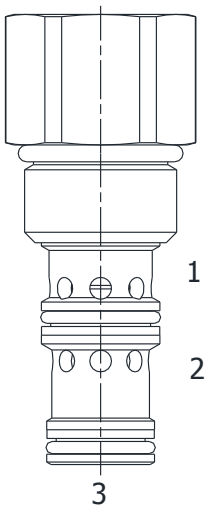


### DESCRIPTION

10 size, 7/8-14 thread, “Delta” series, internal pilot and drain, piloted directional valve.

### OPERATION

The DF-PDI blocks flow at (3) and allows flow from (2) to (1). On attainment of a predetermined pressure at (3) the valve shifts to a allow flow from (3) to (2) and block flow at (1).

### FEATURES

- Hardened parts for long life.
- Industry common cavity

### HYDRAULIC SYMBOL

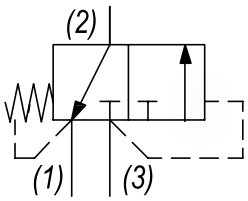


### PERFORMANCE

Actual Test Data (Cartridge Only)

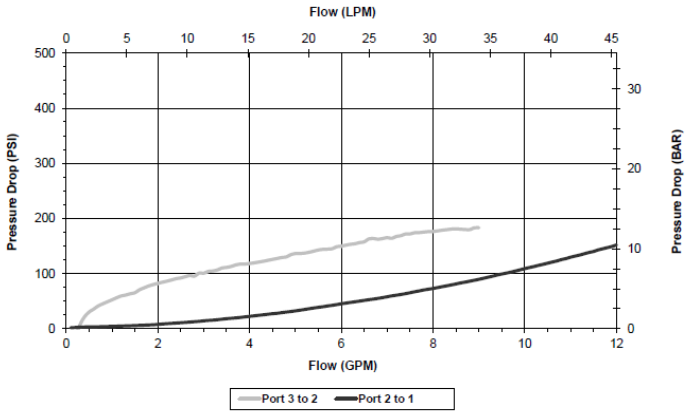


### VALVE SPECIFICATIONS

| | |
|---|---|
| Nominal Flow | 10 GPM (38 LPM) |
| Rated Operating Pressure | 3000 PSI (207 bar) |
| Typical Internal Leakage (150 SSU) | 5 cu in/min (82 ml/min) |
| Viscosity Range | 36 to 3000 SSU (3 to 647 cSt) |
| Filtration | ISO 18/16/13 |
| Media Operating Temp. Range | -40° to 250°F (-40° to 120°C) |
| Weight | .57 lbs (.26 kg) |
| Operating Fluid Media | General Purpose Hydraulic Fluid |
| Cartridge Torque Requirements | 30 ft-lbs (40.6 Nm) |
| Cavity | DELTA 3W |
| Cavity Form Tool (Finishing) | 40500001 |
| Seal Kit | 21191206 |

**WARNING:** *the specifications/application data shown in our catalogs and data sheets are intended only as a general guide for the product described (herein). Any specific application should not be undertaken without independent study, evaluation, and testing for suitability.*



Via Malavolti, 36 - 41122 Modena - ITALY - Phone +39 (059) 254895 - Fax +39 (059) 253512 - mail: tecnord@tecnord.com - **www.tecnord.com**

## DIMENSIONS

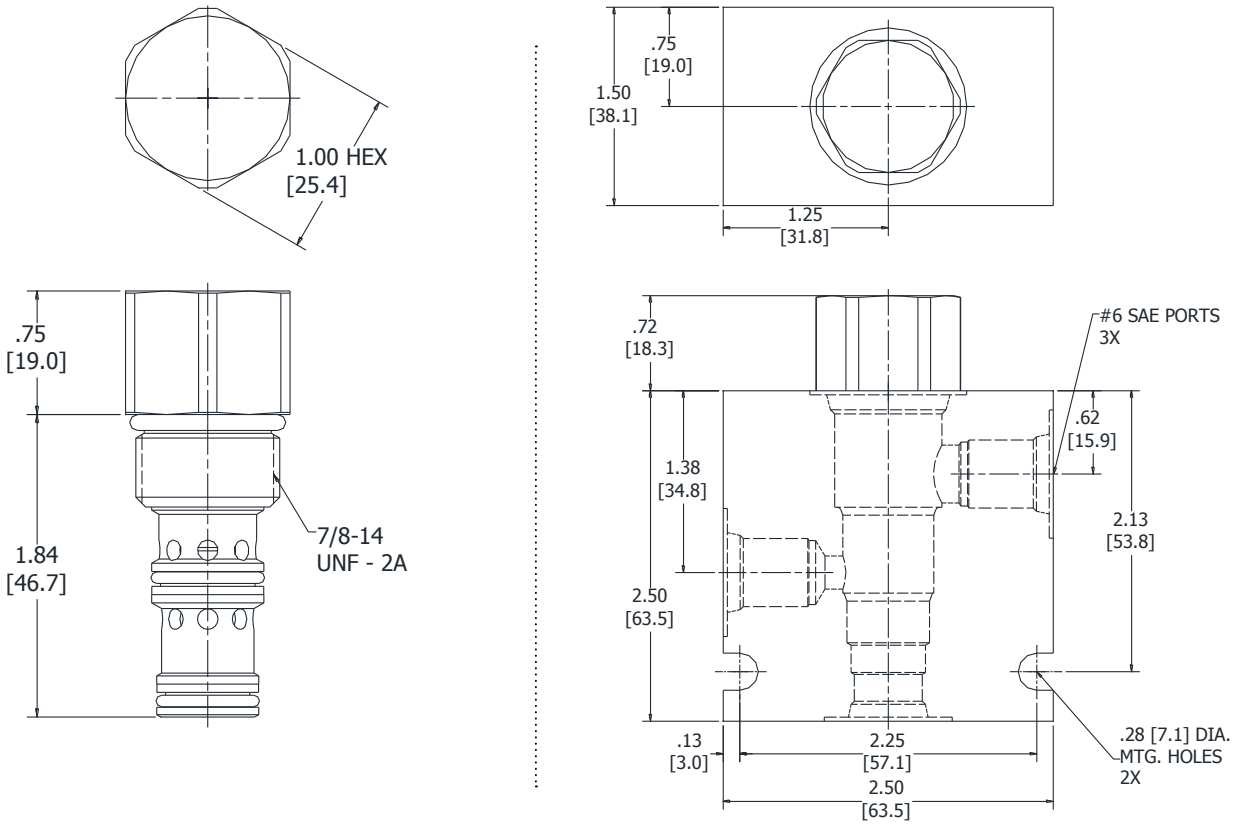


*Body Weight: .99 lbs (.45 kg)*

## ORDERING INFORMATION

**DF-PDI – ____ – ____ – ____**

**OPTIONS**

| | |
|---|---|
| Buna Standard | **00** |
| Viton Standard | **V0** |

**PRESSURE SETTINGS**

| | |
|---|---|
| **0050** | 50 PSI |
| **0100** | 100 PSI |

**BODIES**

| | |
|---|---|
| **Blank** | Without Body |
| **N** | 1/4" NPTF Ports |
| **S** | #6 SAE Ports |

**WARNING:** *the specifications/application data shown in our catalogs and data sheets are intended only as a general guide for the product described (herein). Any specific application should not be undertaken without independent study, evaluation, and testing for suitability.*



Via Malavolti, 36 - 41122 Modena - ITALY - Phone +39 (059) 254895 - Fax +39 (059) 253512 - mail: tecnord@tecnord.com - **www.tecnord.com**

## SO-PTS PILOT TO SHIFT, 3 WAY VALVE, OPEN TRANSITION

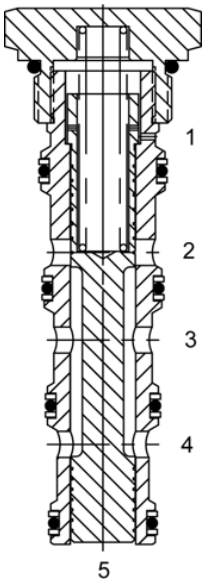


### DESCRIPTION

16 size, 1 5/16 -12 thread, “Super” series, pilot to shift, 3 way valve, open transition.

### OPERATION

In neutral the SO-PTS allows flow between ports (3) and (4), port (2) is blocked. With application of a remote pilot signal at (5), the valve’s spool shifts to allow flow between ports (2) and (3), while port (4) is blocked. During transition ports (2), (3), and (4) are open The spring chamber is vented to the tank through port (1). The vented spring chamber allows the valve to be fully pressurized at ports (2), (3), and (4) without affecting required pilot pressure. Pressure at (1) will affect required pilot pressure.

### FEATURES

- Hardened parts for long life.
- Industry common cavity.

### HYDRAULIC SYMBOL

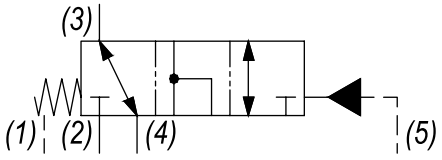


*A rate limiting orifice less than .060” diameter is recommended at port (5).*

### PERFORMANCE

Actual Test Data (Cartridge Only)

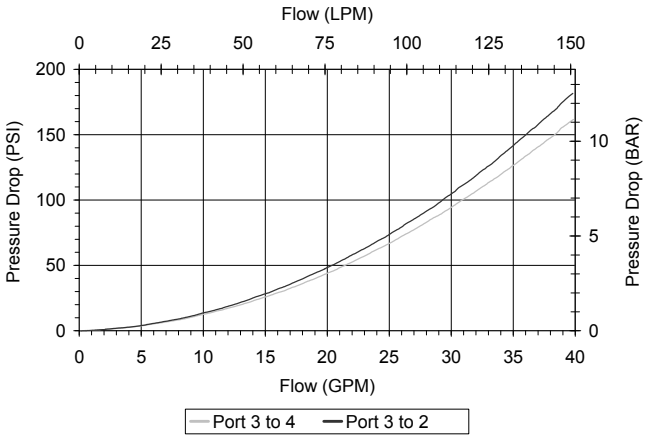


### VALVE SPECIFICATIONS

| | |
|---|---|
| Nominal Flow | 40 GPM (151 LTR/M) |
| Rated Operating Pressure | 3500 PSI (241 bar) |
| Typical Internal Leakage (150 SSU) | 10 cu in/min (164 ml/min) |
| Viscosity Range | 36 to 3000 SSU (3 to 647 cSt) |
| Filtration | ISO 18/16/13 |
| Media Operating Temp. Range | -40° to 250°F (-40° to 120°C) |
| Weight | 1.11 lbs (.50 kg) |
| Operating Fluid Media | General Purpose Hydraulic Fluid |
| Cartridge Torque Requirements | 90 ft-lbs (122 Nm) |
| Cavity | SUPER 5W SHORT |
| Cavity Form Tool (Finishing) | 40500020 |
| Seal Kit | 21191410 |

**WARNING:** *the specifications/application data shown in our catalogs and data sheets are intended only as a general guide for the product described (herein). Any specific application should not be undertaken without independent study, evaluation, and testing for suitability.*



Via Malavolti, 36 - 41122 Modena - ITALY - Phone +39 (059) 254895 - Fax +39 (059) 253512 - mail: tecnord@tecnord.com - **www.tecnord.com**

## DIMENSIONS

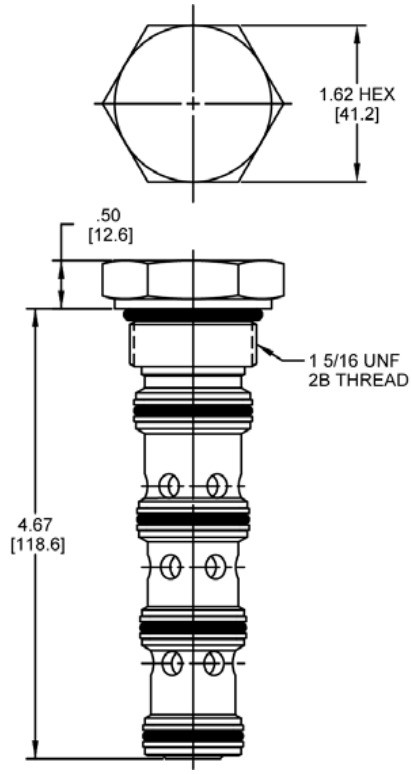


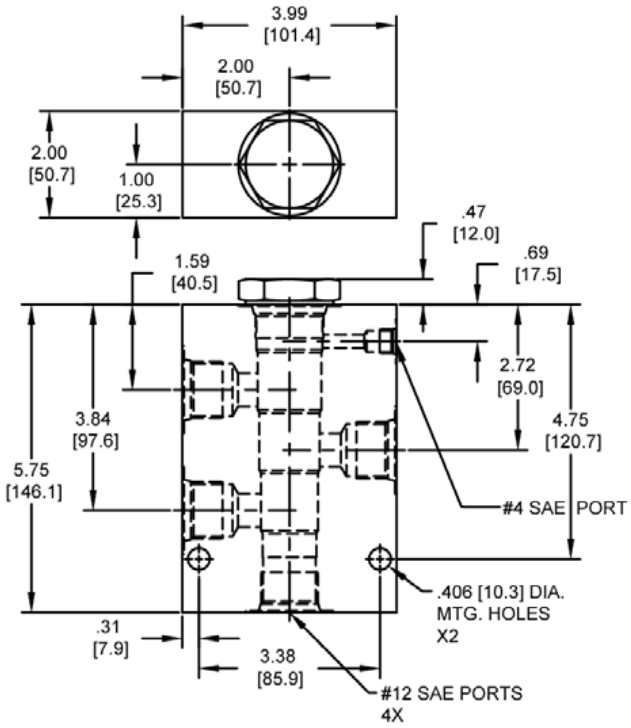


*Body Weight: 3.76 lbs (1.62 kg)*

## ORDERING INFORMATION

**SO-PTS** – _____ – _____ – _____

**OPTIONS**
Buna Standard **00**
Viton Standard **V0**

**SPRING BIAS**
**0070** 70 PSI
**0150** 150 PSI
± 10%

**BODIES**
**Blank** Without Body
**S** #12 SAE Ports

**WARNING:** *the specifications/application data shown in our catalogs and data sheets are intended only as a general guide for the product described (herein). Any specific application should not be undertaken without independent study, evaluation, and testing for suitability.*



Via Malavolti, 36 - 41122 Modena - ITALY - Phone +39 (059) 254895 - Fax +39 (059) 253512 - mail: tecnord@tecnord.com - **www.tecnord.com**

## SO-PTT PILOT TO SHIFT, 3 WAY VALVE, CLOSED TRANSITION

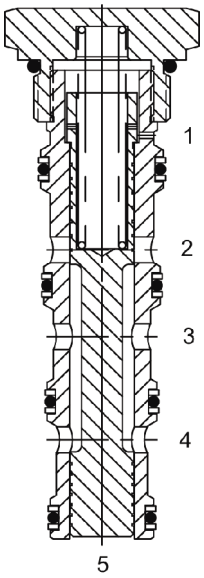


### DESCRIPTION

16 size, 1 5/16 -12 thread, “Super” series, pilot to shift, 3 way valve, closed transition.

### OPERATION

In neutral the SO-PTT allows flow between ports (3) and (4), port (2) is blocked. With application of a remote pilot signal at (5), the valve’s spool shifts to allow flow between ports (2) and (3), while port (4) is blocked. During transition all ports are closed. The spring chamber is vented to the tank through port (1). The vented spring chamber allows the valve to be fully pressurized at ports (2), (3), and (4) without affecting required pilot pressure. Pressure at (1) will affect required pilot pressure.

### FEATURES

- Hardened parts for long life.
- Industry common cavity.

### HYDRAULIC SYMBOL

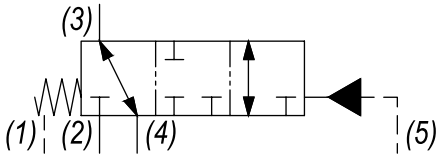


*A rate limiting orifice less than .060” diameter is recommended at port (5).*

### PERFORMANCE

Actual Test Data (Cartridge Only)

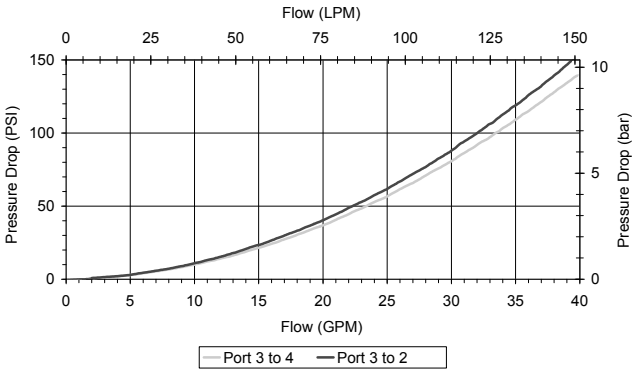


### VALVE SPECIFICATIONS

| | |
|---|---|
| Nominal Flow | 40 GPM (151 LTR/M) |
| Rated Operating Pressure | 3500 PSI (241 bar) |
| Typical Internal Leakage (150 SSU) | 10 cu in/min (164 ml/min) |
| Viscosity Range | 36 to 3000 SSU (3 to 647 cSt) |
| Filtration | ISO 18/16/13 |
| Media Operating Temp. Range | -40° to 250°F (-40° to 120°C) |
| Weight | 1.08 lbs (.49 kg) |
| Operating Fluid Media | General Purpose Hydraulic Fluid |
| Cartridge Torque Requirements | 90 ft-lbs (122 Nm) |
| Cavity | SUPER 5W SHORT |
| Cavity Form Tool (Finishing) | 40500020 |
| Seal Kit | 21191410 |

**WARNING:** *the specifications/application data shown in our catalogs and data sheets are intended only as a general guide for the product described (herein). Any specific application should not be undertaken without independent study, evaluation, and testing for suitability.*



Via Malavolti, 36 - 41122 Modena - ITALY - Phone +39 (059) 254895 - Fax +39 (059) 253512 - mail: tecnord@tecnord.com - **www.tecnord.com**

## DIMENSIONS

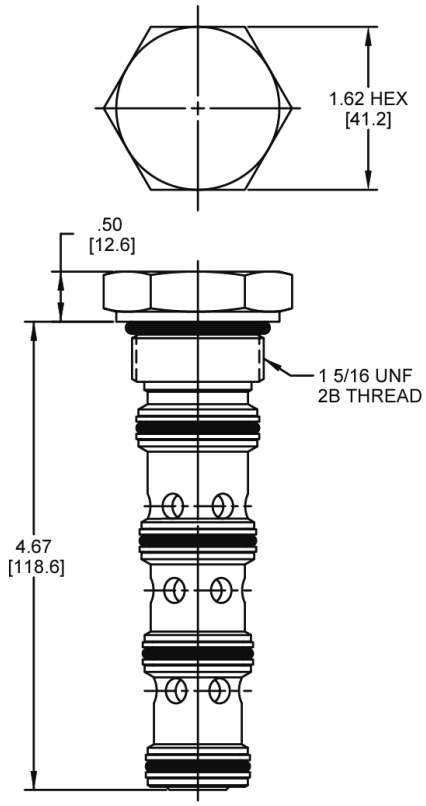


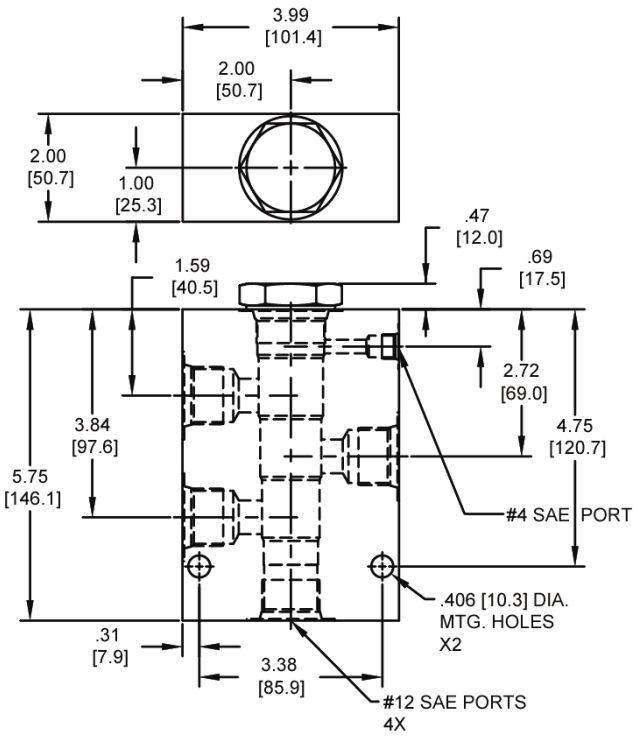


*Body Weight: 3.76 lbs (1.62 kg)*

## ORDERING INFORMATION

**SO-PTT – ____ – ____ – ____**

**OPTIONS**

| | |
|---|---|
| Buna Standard | **00** |
| Viton Standard | **V0** |

**SPRING BIAS**

| | |
|---|---|
| **0070** | 70 PSI |
| **0150** | 150 PSI |
| | ± 10% |

**BODIES**

| | |
|---|---|
| **Blank** | Without Body |
| **S** | #12 SAE Ports |

**WARNING:** *the specifications/application data shown in our catalogs and data sheets are intended only as a general guide for the product described (herein). Any specific application should not be undertaken without independent study, evaluation, and testing for suitability.*



Via Malavolti, 36 - 41122 Modena - ITALY - Phone +39 (059) 254895 - Fax +39 (059) 253512 - mail: tecnord@tecnord.com - **www.tecnord.com**

**WARNING:** *the specifications/application data shown in our catalogs and data sheets are intended only as a general guide for the product described (herein). Any specific application should not be undertaken without independent study, evaluation, and testing for suitability.*



Via Malavolti, 36 - 41122 Modena - ITALY - Phone +39 (059) 254895 - Fax +39 (059) 253512 - mail: tecnord@tecnord.com - **www.tecnord.com**

## SHUTTLE VALVES

| | GPM | PSI | LPM | BAR | CAVITY | MODEL | PAGE |
|---|---|---|---|---|---|---|---|
| 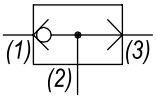  | 10 | 3500 | 38 | 241 | 9/16-18 | **IM-CSB** | MD96 |
| | 1 | 3500 | 4 | 241 | Special | **QS-CSB** | MD98 |
| | 6 | 3500 | 23 | 241 | 3/4-16 | **PP-CSB** | MD100 |
| | 8 | 3500 | 30 | 241 | 7/8-14 | **DF-CSB** | MD102 |

## TYPICAL SCHEMATIC

Typical application for the CSB is to provide load sense to a pressure compensator valve.

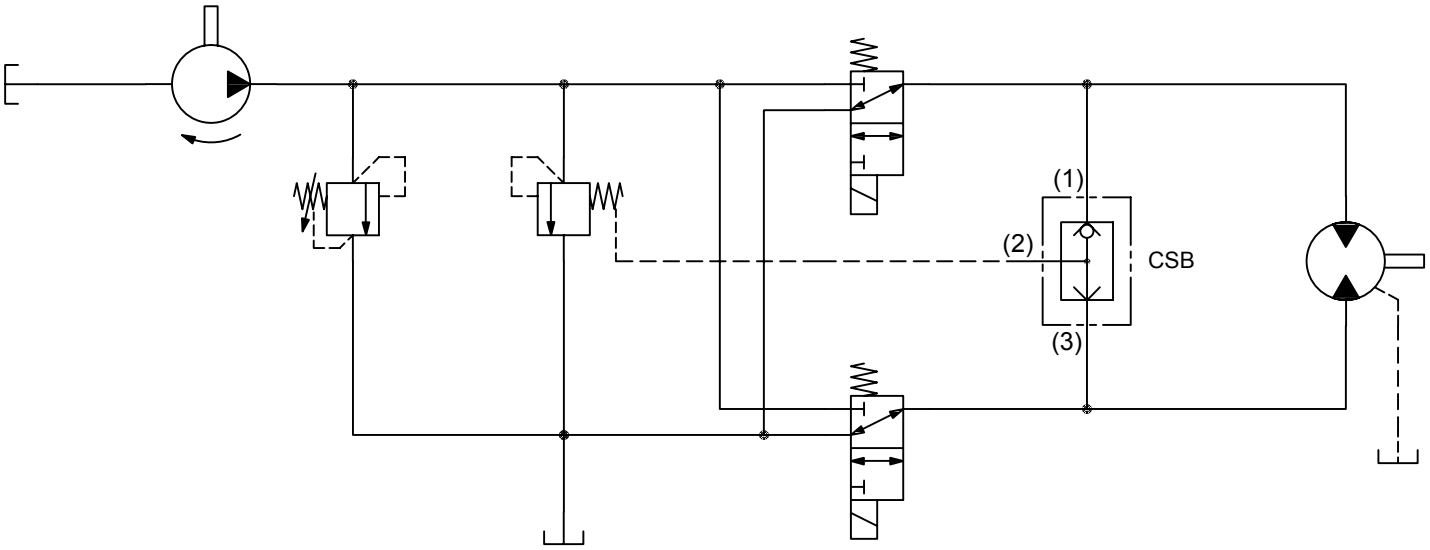


**WARNING:** *the specifications/application data shown in our catalogs and data sheets are intended only as a general guide for the product described (herein). Any specific application should not be undertaken without independent study, evaluation, and testing for suitability.*

## IM-CSB INLINE SHUTTLE VALVE

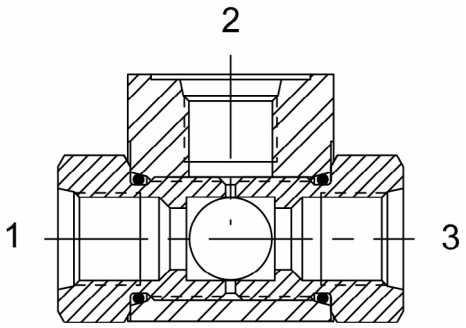


### DESCRIPTION

#6 SAE, inline shuttle valve.

### OPERATION

The IM-CSB allows flow from the higher pressure of (1) or (3) to (2). The valve is commonly used as a load sense to direct oil from the pressure side of a bidirectional hydraulic motor to a pressure released hydraulic brake.

### FEATURES

- Hardened parts for long life.

### HYDRAULIC SYMBOL

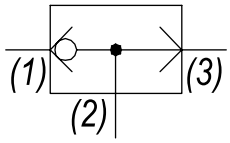


### PERFORMANCE

Actual Test Data (Cartridge Only)

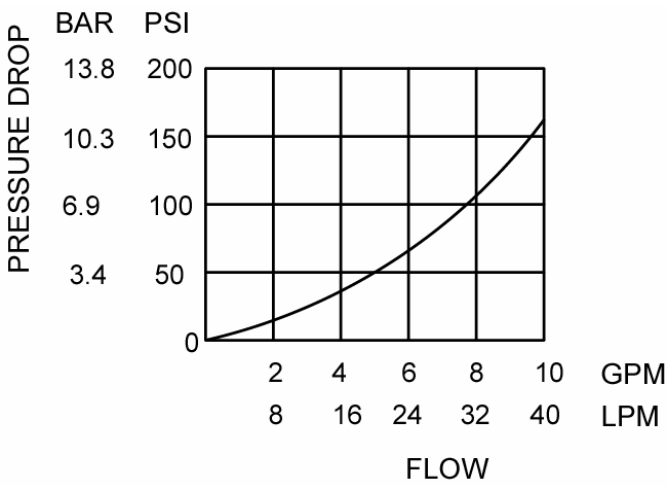


ABOVE CURVE IS WITH
HYDRAULIC OIL 150 SSU AT 100°F.

### VALVE SPECIFICATIONS

| | |
|---|---|
| Nominal Flow Max | 10 GPM (38 LPM) |
| Rated Operating Pressure | 3500 PSI (241 bar) |
| Typical Internal Leakage (150 SSU) | 1 cu in/min (16 ml/min) |
| Viscosity Range | 36 to 3000 SSU (3 to 647 cSt) |
| Filtration | ISO 18/16/13 |
| Media Operating Temp. Range | -40° to 250°F (-40° to 120°C) |
| Weight | .28 lbs (.13 kg) |
| Operating Fluid Media | General Purpose Hydraulic Fluid |

**WARNING:** *the specifications/application data shown in our catalogs and data sheets are intended only as a general guide for the product described (herein). Any specific application should not be undertaken without independent study, evaluation, and testing for suitability.*



Via Malavolti, 36 - 41122 Modena - ITALY - Phone +39 (059) 254895 - Fax +39 (059) 253512 - mail: tecnord@tecnord.com - **www.tecnord.com**

## DIMENSIONS

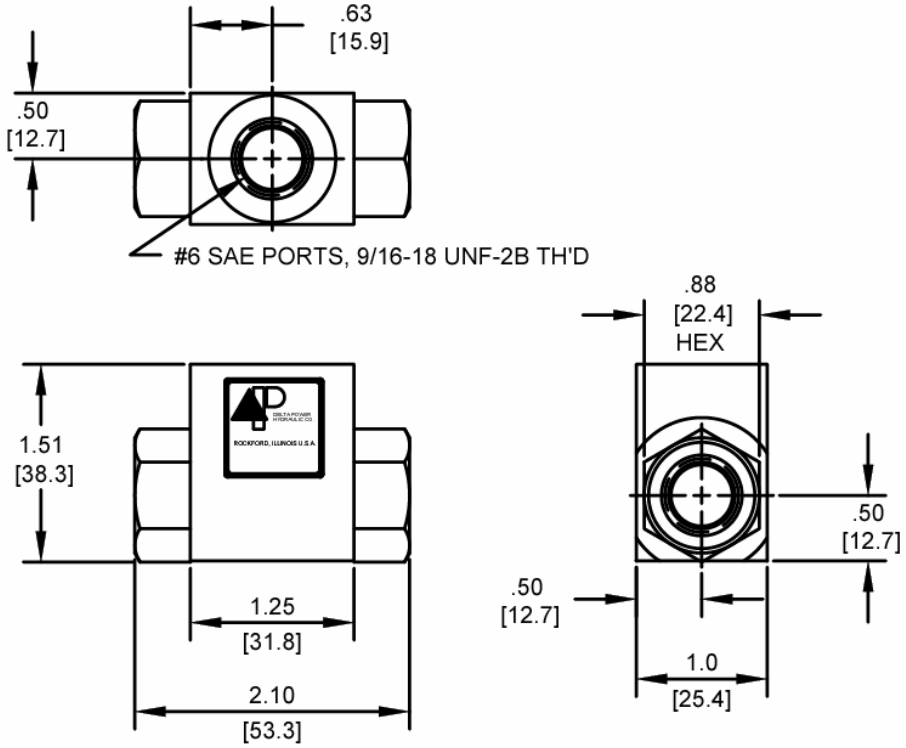


## ORDERING INFORMATION

**IM-CSB –**

**OPTIONS**

Buna Standard **00**

Viton Standard **V0**

**WARNING:** *the specifications/application data shown in our catalogs and data sheets are intended only as a general guide for the product described (herein). Any specific application should not be undertaken without independent study, evaluation, and testing for suitability.*

## QS-CSB SHUTTLE VALVE, INSERT TYPE

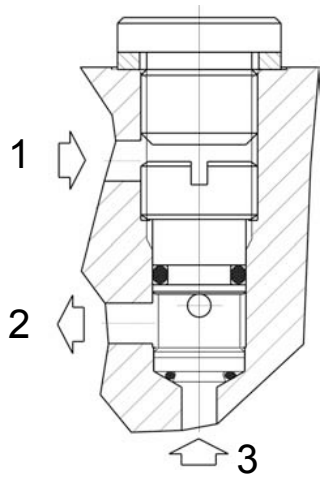


### DESCRIPTION

Special cavity, insert type, shuttle valve.

### OPERATION

The QS-CSB allows flow from the higher pressure of (1) or (3) to (2). QS-CSB is an insert type valve, cavity must be plugged with a M10x1 plug.

The valve is commonly used as a load sense to direct oil from the pressure side of a bidirectional hydraulic motor to a pressure released hydraulic brake.

### FEATURES

- Hardened parts for long life.

### HYDRAULIC SYMBOL

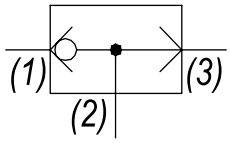


### PERFORMANCE

Actual Test Data (Cartridge Only)

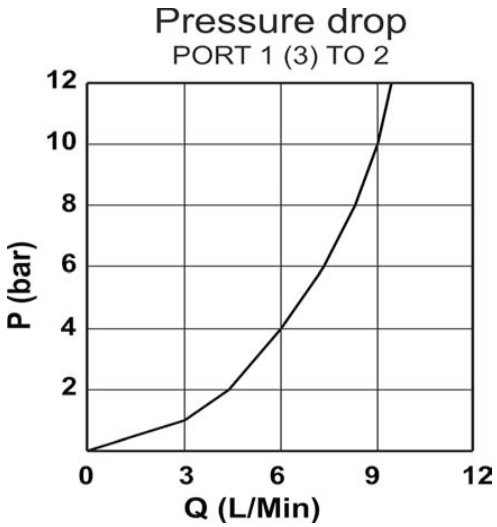


### VALVE SPECIFICATIONS

| | |
|---|---|
| Nominal Flow | 1 GPM (4 LPM) |
| Rated Operating Pressure | 3500 PSI (241 bar) |
| Typical Internal Leakage (150 SSU) | 1 cu in/min (16 ml/min) |
| Viscosity Range | 36 to 3000 SSU (3 to 647 cSt) |
| Filtration | ISO 18/16/13 |
| Media Operating Temp. Range | -40° to 250°F (-40° to 120°C) |
| Weight | .16 lbs (.07 kg) |
| Operating Fluid Media | General Purpose Hydraulic Fluid |
| Cartridge Torque Requirements | 10 - 12 Nm |
| Cavity | T075 |
| Cavity Tools Kit (form tool, reamer, tap) | K-T075 |

**WARNING:** *the specifications/application data shown in our catalogs and data sheets are intended only as a general guide for the product described (herein). Any specific application should not be undertaken without independent study, evaluation, and testing for suitability.*



Via Malavolti, 36 - 41122 Modena - ITALY - Phone +39 (059) 254895 - Fax +39 (059) 253512 - mail: tecnord@tecnord.com - **www.tecnord.com**

## DIMENSIONS

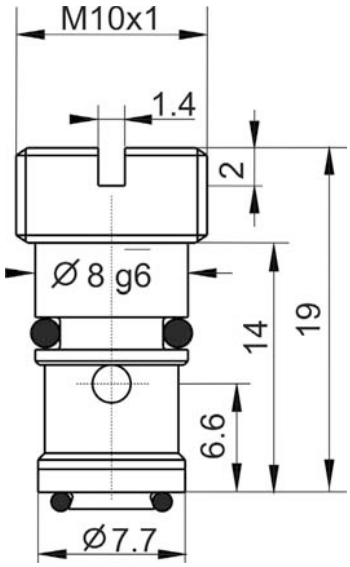


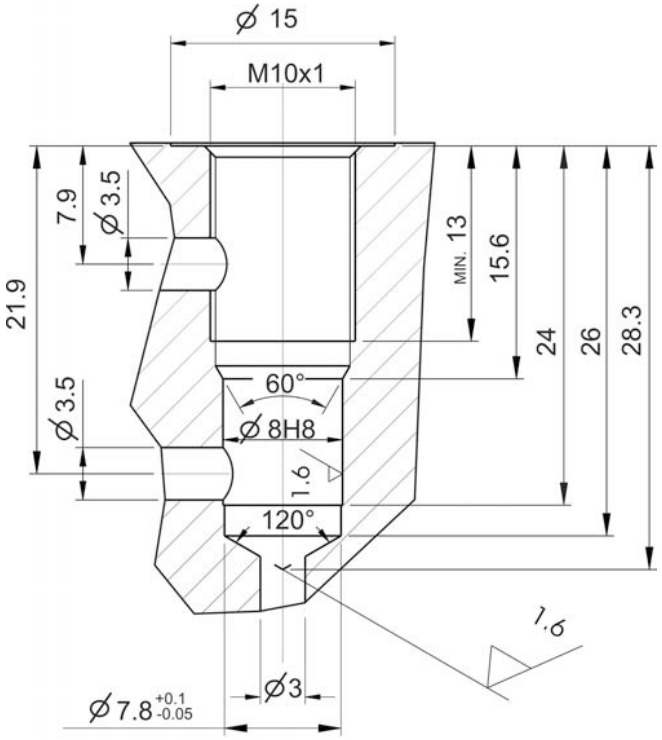


## ORDERING INFORMATION

**QS-CSB – _____ – 00**

**OPTIONS**

Buna Standard **00**

Viton Standard **V0**

**WARNING:** *the specifications/application data shown in our catalogs and data sheets are intended only as a general guide for the product described (herein). Any specific application should not be undertaken without independent study, evaluation, and testing for suitability.*



Via Malavolti, 36 - 41122 Modena - ITALY - Phone +39 (059) 254895 - Fax +39 (059) 253512 - mail: tecnord@tecnord.com - **www.tecnord.com**

## PP-CSB SHUTTLE VALVE

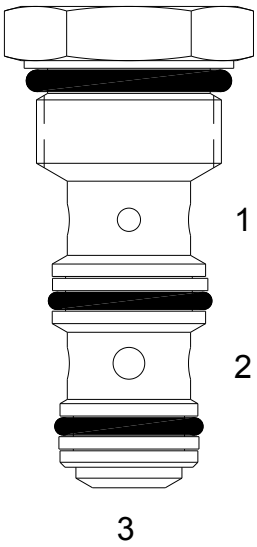


### DESCRIPTION

8 size, 3/4-16 thread, “Power” series, shuttle valve.

### OPERATION

The PP-CSB allows flow from the higher pressure of (1) or (3) to (2). The valve is commonly used as a load sense to direct oil from the pressure side of a bidirectional hydraulic motor to a pressure released hydraulic brake.

### FEATURES

- Hardened parts for long life.
- Industry common cavity.

### HYDRAULIC SYMBOL

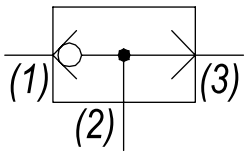


*Tangency connections to cavity are not recommended.*
*Inlet to port (2) is not recommended.*
*Do not use orifice disk under cartridge valve.*

### PERFORMANCE

Actual Test Data (Cartridge Only)

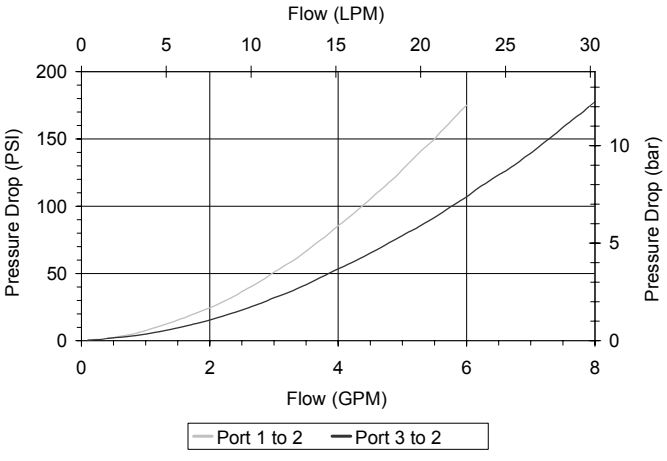


### VALVE SPECIFICATIONS

| | |
|---|---|
| Nominal Flow | 6 GPM (23 LTR/M) |
| Rated Operating Pressure | 3500 PSI (241 bar) |
| Typical Internal Leakage (150 SSU) | 1 cu in/min (16 ml/min) |
| Viscosity Range | 36 to 3000 SSU (3 to 647 cSt) |
| Filtration | ISO 18/16/13 |
| Media Operating Temp. Range | -40° to 250°F (-40° to 120°C) |
| Weight | .16 lbs (.07 kg) |
| Operating Fluid Media | General Purpose Hydraulic Fluid |
| Cartridge Torque Requirements | 25 ft-lbs (34 Nm) |
| Cavity | POWER 3W |
| Cavity Form Tool (Finishing) | 40500024 |
| Seal Kit | 21191104 |

**WARNING:** *the specifications/application data shown in our catalogs and data sheets are intended only as a general guide for the product described (herein). Any specific application should not be undertaken without independent study, evaluation, and testing for suitability.*



Via Malavolti, 36 - 41122 Modena - ITALY - Phone +39 (059) 254895 - Fax +39 (059) 253512 - mail: tecnord@tecnord.com - **www.tecnord.com**

## DIMENSIONS

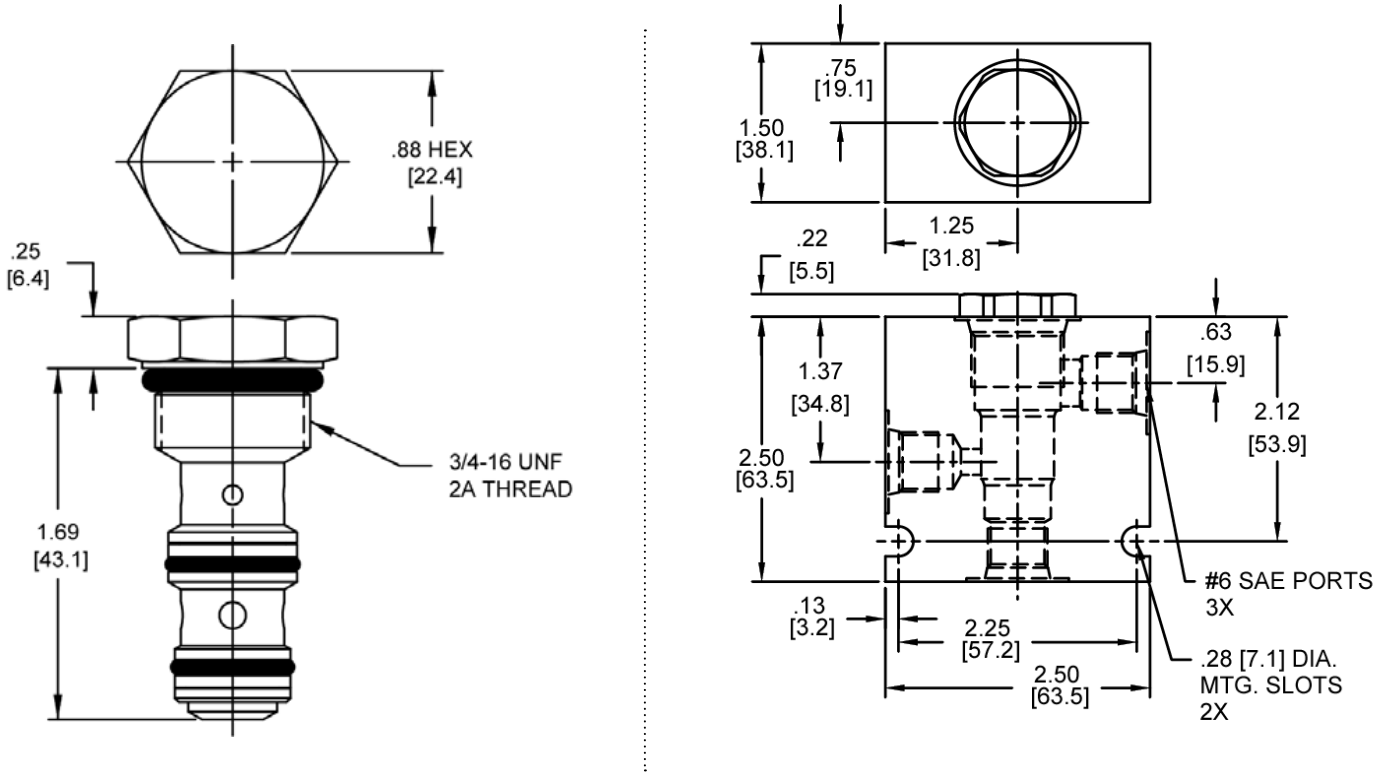


*Body Weight: .56 lbs (.25 kg)*

## ORDERING INFORMATION

**PP-CSB – _____ – _____**

| OPTIONS | | BODIES | |
|---|---|---|---|
| Buna, Standard | **00** | **Blank** | Without Body |
| Viton, Standard | **V0** | **N** | 1/4" NPTF Ports |
| | | **S** | #6 SAE Ports |

**WARNING:** *the specifications/application data shown in our catalogs and data sheets are intended only as a general guide for the product described (herein). Any specific application should not be undertaken without independent study, evaluation, and testing for suitability.*



Via Malavolti, 36 - 41122 Modena - ITALY - Phone +39 (059) 254895 - Fax +39 (059) 253512 - mail: tecnord@tecnord.com - **www.tecnord.com**

## DF-CSB SHUTTLE VALVE

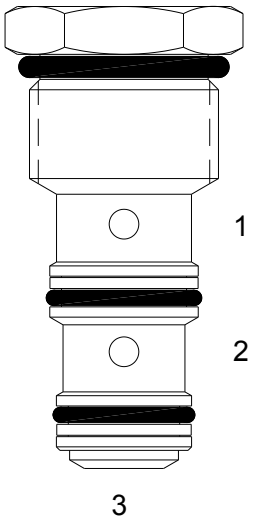


### DESCRIPTION

10 size, 7/8-14 thread, “Delta” series, shuttle valve.

### OPERATION

The DF-CSB allows flow from the higher pressure of (1) or (3) to (2). The valve is commonly used as a load sense to direct oil from the pressure side of a bidirectional hydraulic motor to a pressure-released hydraulic brake.

### FEATURES

- Hardened parts for long life.
- Industry common cavity.

### HYDRAULIC SYMBOL

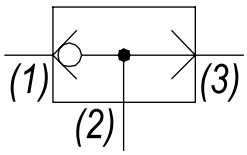


*Tangency connections to cavity are not recommended.*
*Inlet to port (2) is not recommended.*
*Do not use orifice disk under cartridge valve.*

### PERFORMANCE

Actual Test Data (Cartridge Only)

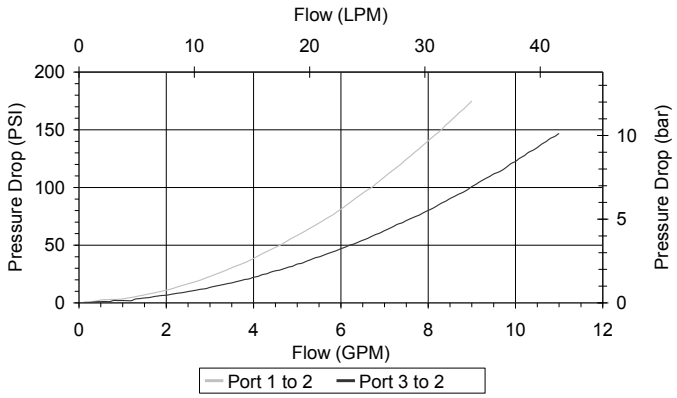


### VALVE SPECIFICATIONS

| | |
|---|---|
| Nominal Flow | 8 GPM (30 LPM) |
| Rated Operating Pressure | 3500 PSI (241 bar) |
| Typical Internal Leakage (150 SSU) | 1 cu in/min (16 ml/min) |
| Viscosity Range | 36 to 3000 SSU (3 to 647 cSt) |
| Filtration | ISO 18/16/13 |
| Media Operating Temp. Range | -40° to 250°F (-40° to 120°C) |
| Weight | .22 lbs (.10 kg) |
| Operating Fluid Media | General Purpose Hydraulic Fluid |
| Cartridge Torque Requirements | 30 ft-lbs (40.6 Nm) |
| Cavity | DELTA 3W |
| Cavity Form Tool (Finishing) | 40500001 |
| Seal Kit | 21191206 |

**WARNING:** *the specifications/application data shown in our catalogs and data sheets are intended only as a general guide for the product described (herein). Any specific application should not be undertaken without independent study, evaluation, and testing for suitability.*



Via Malavolti, 36 - 41122 Modena - ITALY - Phone +39 (059) 254895 - Fax +39 (059) 253512 - mail: tecnord@tecnord.com - **www.tecnord.com**

## DIMENSIONS

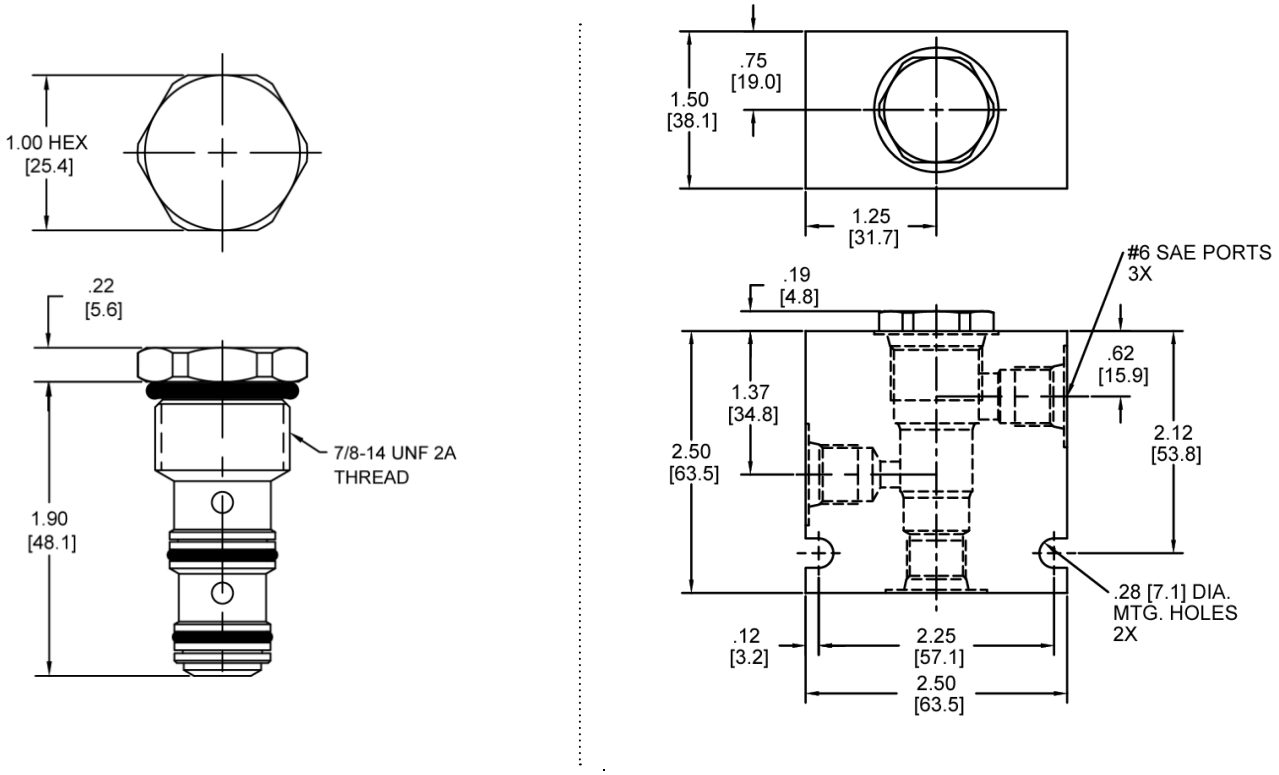


*Body Weight: .76 lbs (.35 kg)*

## ORDERING INFORMATION

**DF-CSB –** _____ **–** _____

| OPTIONS | | BODIES | |
|---|---|---|---|
| Buna Standard | **00** | **Blank** | Without Body |
| Viton Standard | **V0** | **N** | 1/4" NPTF Ports |
| | | **S** | #6 SAE Ports |

**WARNING:** *the specifications/application data shown in our catalogs and data sheets are intended only as a general guide for the product described (herein). Any specific application should not be undertaken without independent study, evaluation, and testing for suitability.*



Via Malavolti, 36 - 41122 Modena - ITALY - Phone +39 (059) 254895 - Fax +39 (059) 253512 - mail: tecnord@tecnord.com - **www.tecnord.com**

**WARNING:** *the specifications/application data shown in our catalogs and data sheets are intended only as a general guide for the product described (herein). Any specific application should not be undertaken without independent study, evaluation, and testing for suitability.*



Via Malavolti, 36 - 41122 Modena - ITALY - Phone +39 (059) 254895 - Fax +39 (059) 253512 - mail: tecnord@tecnord.com - **www.tecnord.com**

## ROTARY VALVES

| 2W2P | GPM | PSI | LPM | BAR | CAVITY | MODEL | PAGE |
|---|---|---|---|---|---|---|---|
| 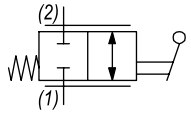 | 40 | 3000 | 151 | 207 | 1 5/16-12 | **SJ-MRA** | MD106 |

| 3W2P | GPM | PSI | LPM | BAR | CAVITY | MODEL | PAGE |
|---|---|---|---|---|---|---|---|
| 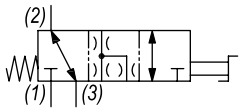 | 12 | 3000 | 45 | 207 | 7/8-14 | **DF-M3A** | MD108 |

| 4W2P | GPM | PSI | LPM | BAR | CAVITY | MODEL | PAGE |
|---|---|---|---|---|---|---|---|
| 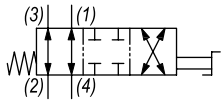 | 10 | 3000 | 38 | 207 | 7/8-14 | **DG-M4A** | MD110 |
| 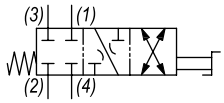 | 15 | 3000 | 57 | 207 | 7/8-14 | **DG-M4B** | MD112 |
| 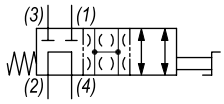 | 12 | 3000 | 45 | 207 | 7/8-14 | **DG-M4C** | MD114 |

| 6W2P | GPM | PSI | LPM | BAR | CAVITY | MODEL | PAGE |
|---|---|---|---|---|---|---|---|
| 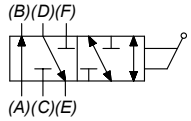 | 25 | 3000 | 95 | 207 | 7/8-14 | **QS-MRS** | MD116 |

**WARNING:** *the specifications/application data shown in our catalogs and data sheets are intended only as a general guide for the product described (herein). Any specific application should not be undertaken without independent study, evaluation, and testing for suitability.*

## SJ-MRA MANUAL ROTARY SPOOL VALVE, 2 WAY

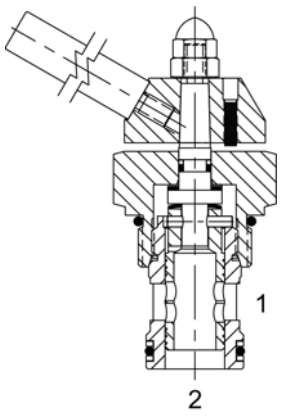


### DESCRIPTION

16 size, 1 5/16-12, “Super” series, manual rotary spool valve.

### OPERATION

The SJ-MRA regulates flow from (1) to (2) or (2) to (1). Counter-clockwise Rotation of 90° adjusts valve from fully closed to fully open.

### FEATURES

- Hardened parts for long life.
- Industry common cavity.

### HYDRAULIC SYMBOL

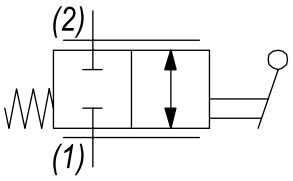


### PERFORMANCE

Actual Test Data (Cartridge Only)

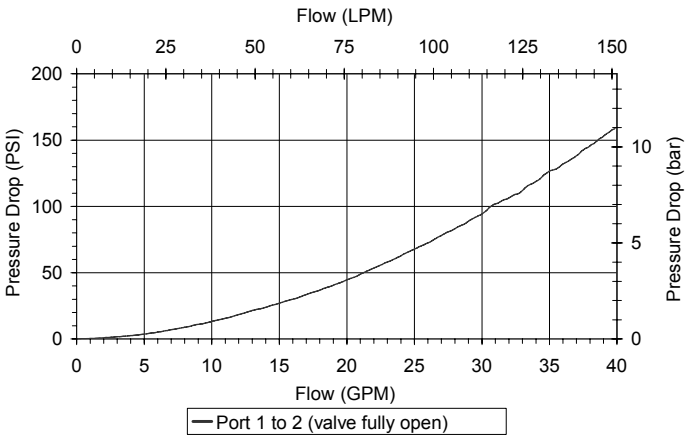


### VALVE SPECIFICATIONS

| | |
|---|---|
| Nominal Flow | 40 GPM (151 LTR/M) |
| Rated Operating Pressure | 3000 PSI (207 bar) |
| Typical Internal Leakage (150 SSU) | 15 cu in/min (246 ml/min) |
| Viscosity Range | 36 to 3000 SSU (3 to 647 cSt) |
| Filtration | ISO 18/16/13 |
| Media Operating Temp. Range | -40° to 250°F (-40° to 120°C) |
| Weight | 1.13 lbs (.51 kg) |
| Operating Fluid Media | General Purpose Hydraulic Fluid |
| Cartridge Torque Requirements | 90 ft-lbs (122 Nm) |
| Cavity | SUPER 2W |
| Cavity Form Tool (Finishing) | 40500017 |
| Seal Kit | 21191402 |

**WARNING:** *the specifications/application data shown in our catalogs and data sheets are intended only as a general guide for the product described (herein). Any specific application should not be undertaken without independent study, evaluation, and testing for suitability.*



Via Malavolti, 36 - 41122 Modena - ITALY - Phone +39 (059) 254895 - Fax +39 (059) 253512 - mail: tecnord@tecnord.com - **www.tecnord.com**

## DIMENSIONS

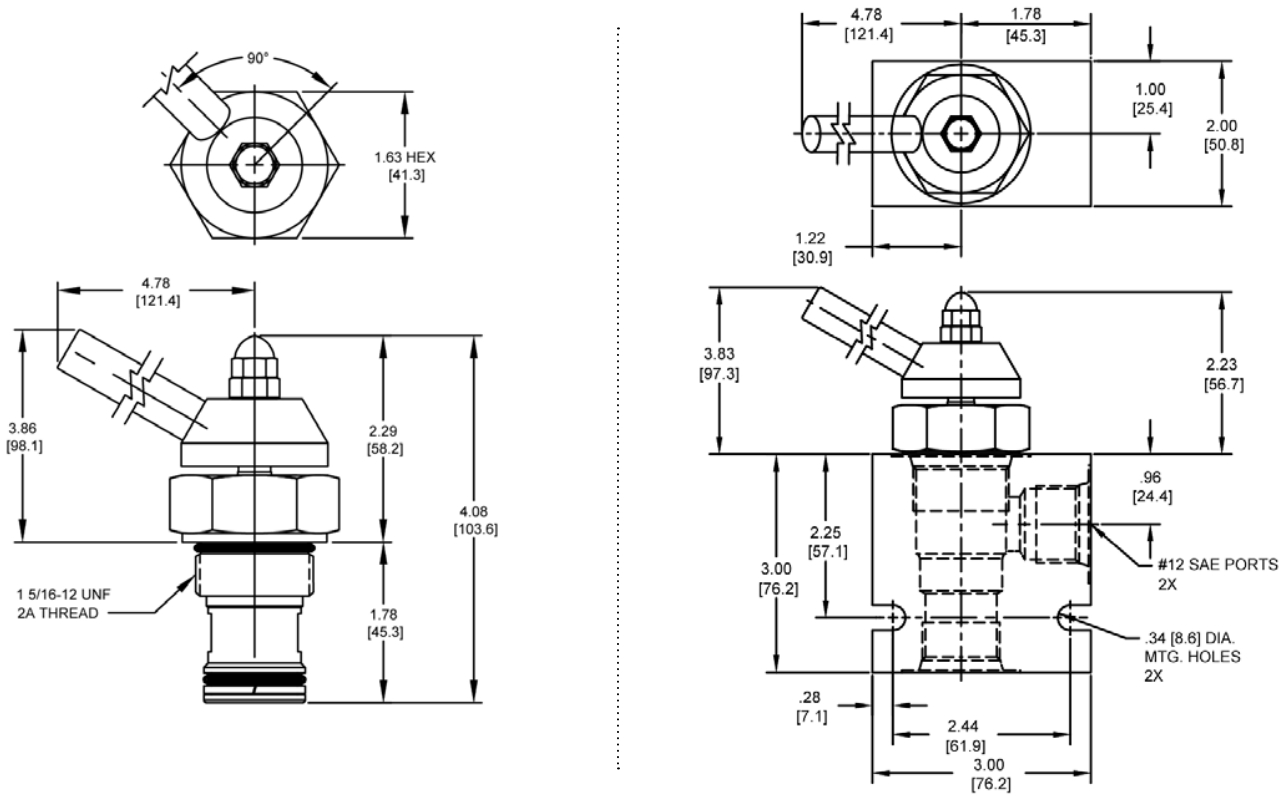


*Body Weight: 1.29 lbs (.59 kg)*

## ORDERING INFORMATION

**SJ-MRA – _____ – _____**

| OPTIONS | | BODIES | |
|---|---|---|---|
| Buna, Standard | **00** | **Blank** | Without Body |
| Viton, Standard | **V0** | **N** | 3/4" NPTF Ports |
| | | **S** | #12 SAE Ports |

**WARNING:** *the specifications/application data shown in our catalogs and data sheets are intended only as a general guide for the product described (herein). Any specific application should not be undertaken without independent study, evaluation, and testing for suitability.*



Via Malavolti, 36 - 41122 Modena - ITALY - Phone +39 (059) 254895 - Fax +39 (059) 253512 - mail: tecnord@tecnord.com - **www.tecnord.com**

## DF-M3A MANUAL ROTARY SPOOL VALVE, 3 WAY 2 POSITION

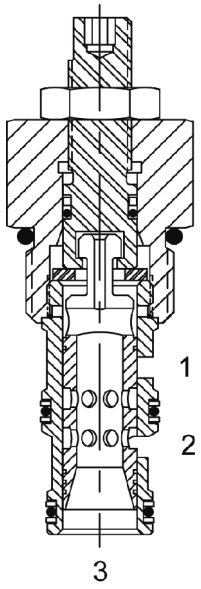


### DESCRIPTION

10 size, 7/8-14 thread, “Delta” series, 3 way 2 position, manual rotary spool valve.

### OPERATION

The DF-M3A when rotated fully to the clockwise position, the cartridge directs flow from (3) to (2) or (2) to (3) and blocks flow at (1). When rotated fully to the counterclockwise position, the cartridge directs flow from (1) to (3) or (3) to (1) and blocks flow at (2). All ports are closed in transition.

### FEATURES

- Hardened parts for long life.
- Industry common cavity.

### HYDRAULIC SYMBOL

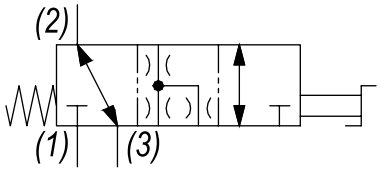


*May be used as metering product. Valve has approximately 3.5 turns adjustment from extreme clockwise fully to counterclockwise positions. See chart for pressure drop in both positions.*

### PERFORMANCE

Actual Test Data (Cartridge Only)

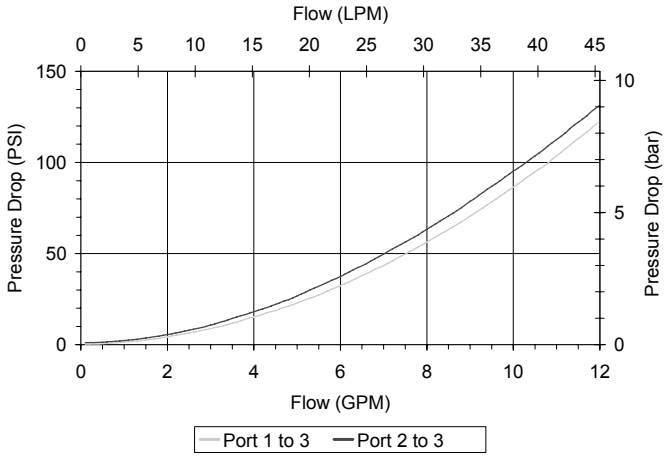


### VALVE SPECIFICATIONS

| | |
|---|---|
| Nominal Flow | 12 GPM (45 LPM) |
| Rated Operating Pressure | 3000 PSI (207 bar) |
| Typical Internal Leakage (150 SSU) | 5 cu in/min (82 ml/min) |
| Viscosity Range | 36 to 3000 SSU (3 to 647 cSt) |
| Filtration | ISO 18/16/13 |
| Media Operating Temp. Range | -40° to 250°F (-40° to 120°C) |
| Weight | .49 lbs (.22 kg) |
| Operating Fluid Media | General Purpose Hydraulic Fluid |
| Cartridge Torque Requirements | 30 ft-lbs (40.6 Nm) |
| Cavity | DELTA 3W |
| Cavity Form Tool (Finishing) | 40500001 |
| Seal Kit | 21191210 |

**WARNING:** *the specifications/application data shown in our catalogs and data sheets are intended only as a general guide for the product described (herein). Any specific application should not be undertaken without independent study, evaluation, and testing for suitability.*



Via Malavolti, 36 - 41122 Modena - ITALY - Phone +39 (059) 254895 - Fax +39 (059) 253512 - mail: tecnord@tecnord.com - **www.tecnord.com**

## DIMENSIONS

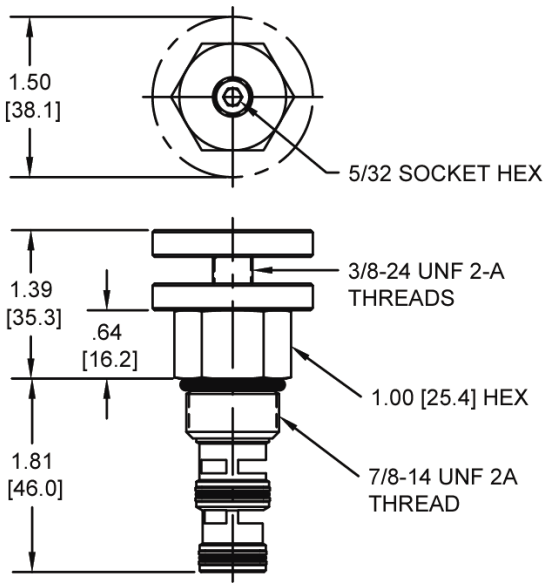


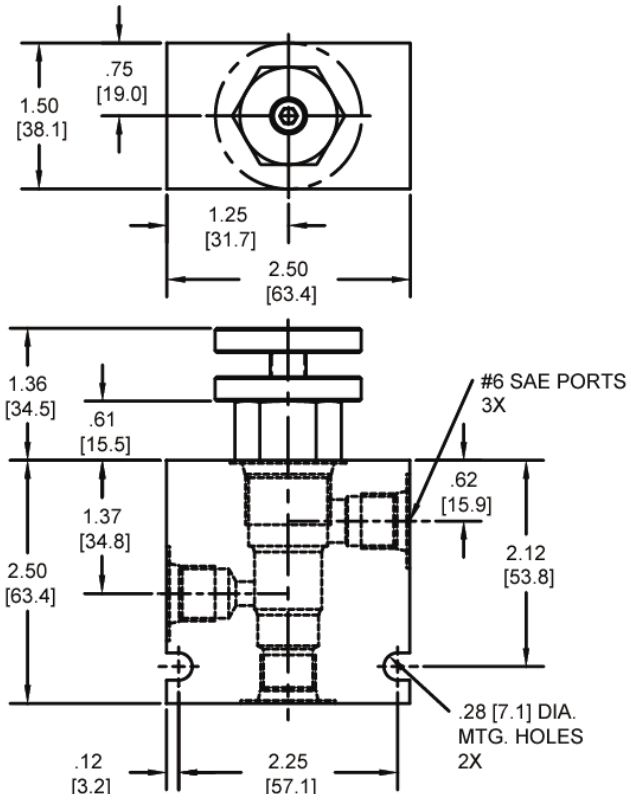


*Body Weight: .60 lbs (.27 kg)*

## ORDERING INFORMATION

**DF-M3A – _____ – _____**

| OPTIONS | | BODIES | |
|---|---|---|---|
| Buna, Standard | **00** | **Blank** | Without Body |
| Viton, Standard | **V0** | **N** | 1/4" NPTF Ports |
| Buna, Knob | **0K** | **S** | #6 SAE Ports |
| Viton, Knob | **VK** | | |

**WARNING:** *the specifications/application data shown in our catalogs and data sheets are intended only as a general guide for the product described (herein). Any specific application should not be undertaken without independent study, evaluation, and testing for suitability.*



Via Malavolti, 36 - 41122 Modena - ITALY - Phone +39 (059) 254895 - Fax +39 (059) 253512 - mail: tecnord@tecnord.com - **www.tecnord.com**

## DG-M4A MANUAL SPOOL ROTARY VALVE, 4 WAY 2 POSITION, CRISS CROSS

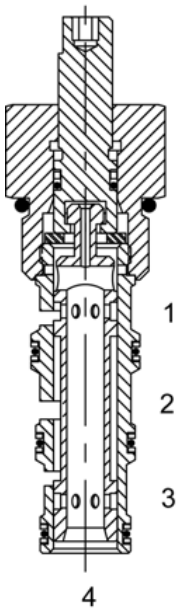


### DESCRIPTION

10 size, 7/8-14 thread, “Delta” series, manual rotary spool valve, 4 way 2 position, criss cross.

### OPERATION

The DG-M4A, when rotated fully to clockwise position, the cartridge directs flow between (2) to (3) and (1) to (4). When rotated fully to counterclockwise position, the cartridge directs flow between (3) to (4) and (1) to (2). All ports are closed in transition.

### FEATURES

- Hardened parts for long life.
- Industry common cavity.

*May be used as metering product. Valve has approximately 3.5 turns adjustment from extreme clockwise fully to counterclockwise positions. See chart for pressure drop in both positions.*

### PERFORMANCE

Actual Test Data (Cartridge Only)

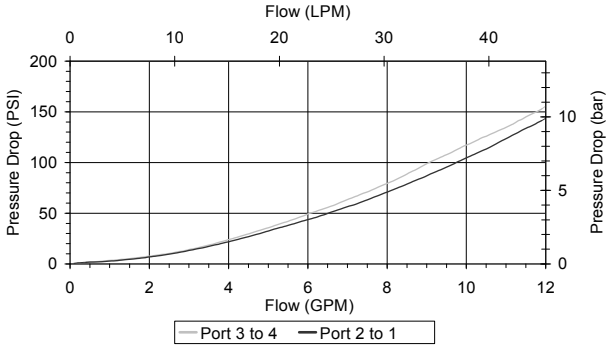


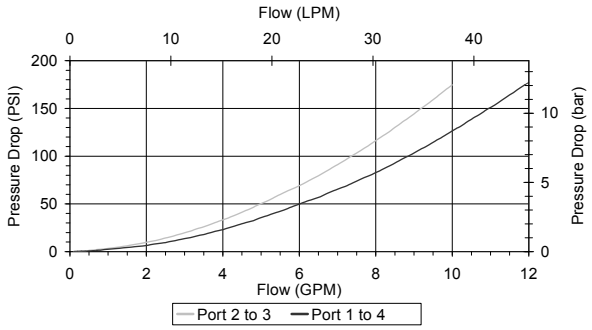


### HYDRAULIC SYMBOL

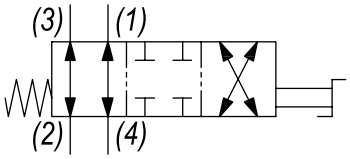


### VALVE SPECIFICATIONS

| | |
|---|---|
| Nominal Flow | 10 GPM (38 LPM)<br>8 GPM (30 LPM) from (2) to (3) |
| Rated Operating Pressure | 3000 PSI (207 bar) |
| Typical Internal Leakage (150 SSU) | 5 cu in/min (82 ml/min) per path |
| Viscosity Range | 36 to 3000 SSU (3 to 647 cSt) |
| Filtration | ISO 18/16/13 |
| Media Operating Temp. Range | -40° to 250°F (-40° to 120°C) |
| Weight | .32 lbs (.15 kg) |
| Operating Fluid Media | General Purpose Hydraulic Fluid |
| Cartridge Torque Requirements | 30 ft-lbs (40.6 Nm) |
| Cavity | DELTA 4W |
| Cavity Form Tool (Finishing) | 40500002 |
| Seal Kit | 21191214 |

**WARNING:** *the specifications/application data shown in our catalogs and data sheets are intended only as a general guide for the product described (herein). Any specific application should not be undertaken without independent study, evaluation, and testing for suitability.*



Via Malavolti, 36 - 41122 Modena - ITALY - Phone +39 (059) 254895 - Fax +39 (059) 253512 - mail: tecnord@tecnord.com - **www.tecnord.com**

## DIMENSIONS

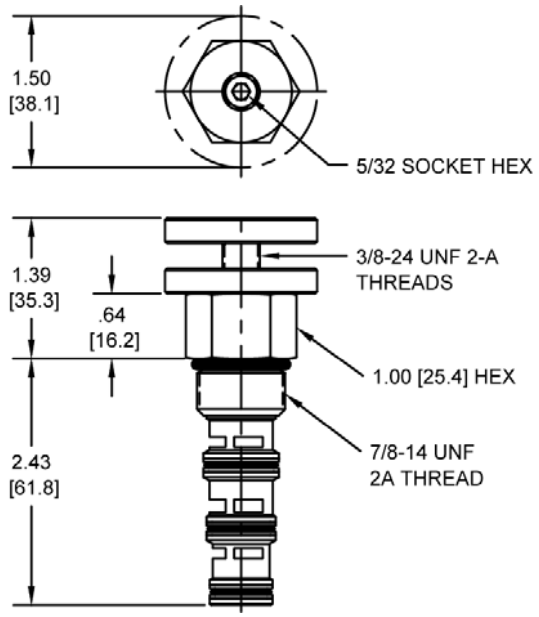


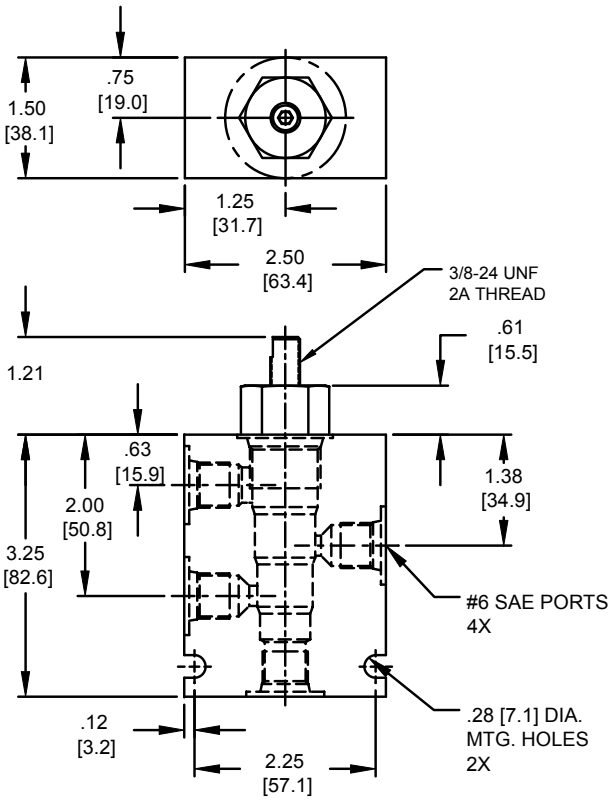


*Body Weight: .99 lbs (.45 kg)*

## ORDERING INFORMATION

**DG-M4A – ____ – ____**

| OPTIONS | | BODIES | |
|---|---|---|---|
| Buna, Standard | **00** | **Blank** | Without Body |
| Viton, Standard | **V0** | **N** | 1/4" NPTF Ports |
| Buna, Knob | **0K** | **S** | #6 SAE Ports |
| Viton, Knob | **VK** | | |

**WARNING:** *the specifications/application data shown in our catalogs and data sheets are intended only as a general guide for the product described (herein). Any specific application should not be undertaken without independent study, evaluation, and testing for suitability.*



Via Malavolti, 36 - 41122 Modena - ITALY - Phone +39 (059) 254895 - Fax +39 (059) 253512 - mail: tecnord@tecnord.com - **www.tecnord.com**

## DG-M4B MANUAL ROTARY SPOOL VALVE, 4 WAY 2 POSITION, CLOSED CENTER

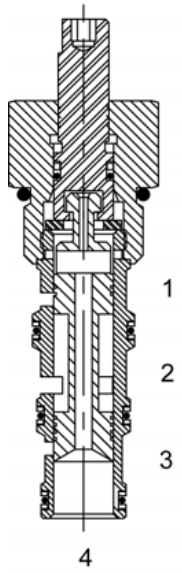


### DESCRIPTION

10 size, 7/8-14 thread, “Delta” series, 4 way 2 position, manual rotary spool valve, closed center.

### OPERATION

The DG-M4B when rotated fully to clockwise position, this valve blocks flow at all ports. When rotated fully to counterclockwise position, the cartridge directs flow between (2) and (1), as well as (3) and (4).

### FEATURES

- Hardened parts for long life.
- Industry common cavity.

### HYDRAULIC SYMBOL

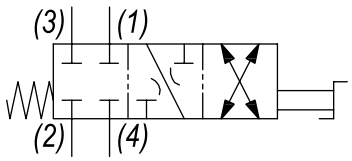


*May be used as metering product. Valve has approximately 3.5 turns adjustment from extreme clockwise fully to counterclockwise positions. See chart for pressure drop.*

### PERFORMANCE

Actual Test Data (Cartridge Only)

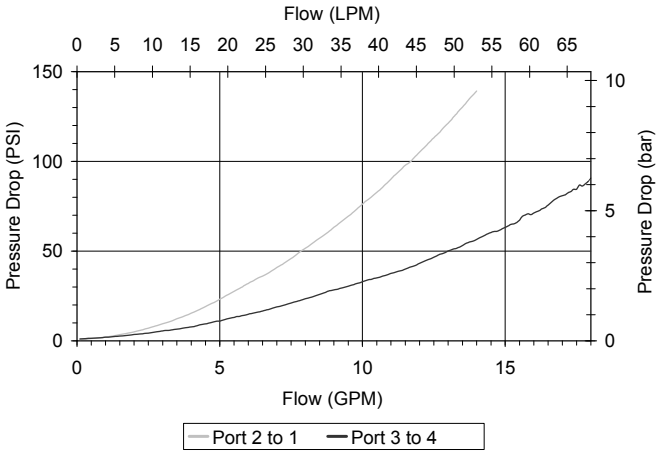


### VALVE SPECIFICATIONS

| | |
|---|---|
| Nominal Flow | 15 GPM (57 LPM) |
| Rated Operating Pressure | 3000 PSI (207 bar) |
| Typical Internal Leakage (150 SSU) | 5 cu in/min (82 ml/min) per path |
| Viscosity Range | 36 to 3000 SSU (3 to 647 cSt) |
| Filtration | ISO 18/16/13 |
| Media Operating Temp. Range | -40° to 250°F (-40° to 120°C) |
| Weight | .33 lbs (.15 kg) |
| Operating Fluid Media | General Purpose Hydraulic Fluid |
| Cartridge Torque Requirements | 30 ft-lbs (40.6 Nm) |
| Cavity | DELTA 4W |
| Cavity Form Tool (Finishing) | 40500002 |
| Seal Kit | 21191214 |

**WARNING:** *the specifications/application data shown in our catalogs and data sheets are intended only as a general guide for the product described (herein). Any specific application should not be undertaken without independent study, evaluation, and testing for suitability.*



Via Malavolti, 36 - 41122 Modena - ITALY - Phone +39 (059) 254895 - Fax +39 (059) 253512 - mail: tecnord@tecnord.com - **www.tecnord.com**

## DIMENSIONS

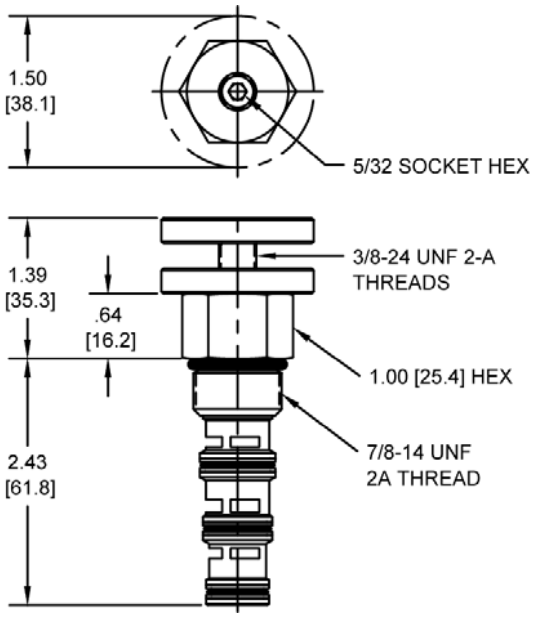


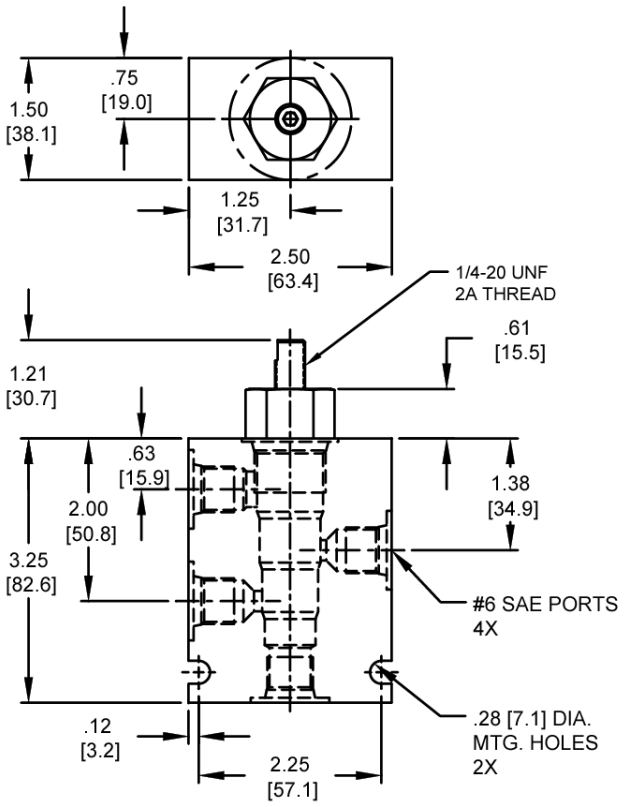


*Body Weight: .99 lbs (.45 kg)*

## ORDERING INFORMATION

**DG-M4B – ____ – ____**

| OPTIONS | | BODIES | |
|---|---|---|---|
| Buna, Standard | **00** | **Blank** | Without Body |
| Viton, Standard | **V0** | **N** | 1/4" NPTF Ports |
| Buna, Knob | **0K** | **S** | #6 SAE Ports |
| Viton, Knob | **VK** | | |

**WARNING:** *the specifications/application data shown in our catalogs and data sheets are intended only as a general guide for the product described (herein). Any specific application should not be undertaken without independent study, evaluation, and testing for suitability.*



Via Malavolti, 36 - 41122 Modena - ITALY - Phone +39 (059) 254895 - Fax +39 (059) 253512 - mail: tecnord@tecnord.com - **www.tecnord.com**

## DG-M4C MANUAL ROTARY SPOOL VALVE, 4 WAY 2 POSITION, TANDEM CENTER

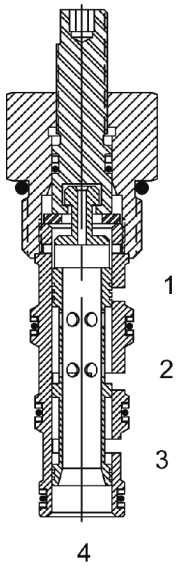


### DESCRIPTION

10 size, 7/8-14 thread, “Delta” series, 4 way 2 position, manual rotary spool valve tandem center.

### OPERATION

The DG-M4C when rotated fully to clockwise position, the cartridge allows flow from (2) to (4) and blocks flow at (1) and (3). When rotated fully total counterclockwise position, the cartridge allows flow between (2) and (3) and between (1) and (4). All ports are closed in transition.

### FEATURES

- Hardened parts for long life.
- Industry common cavity.

### HYDRAULIC SYMBOL

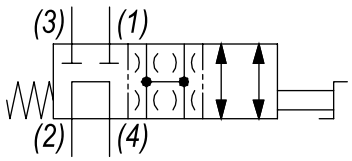


*May be used as metering product. Valve has approximately 3.5 turns adjustment from extreme clockwise fully to counterclockwise positions. See chart for fully open and fully closed pressure drop.*

### PERFORMANCE

Actual Test Data (Cartridge Only)

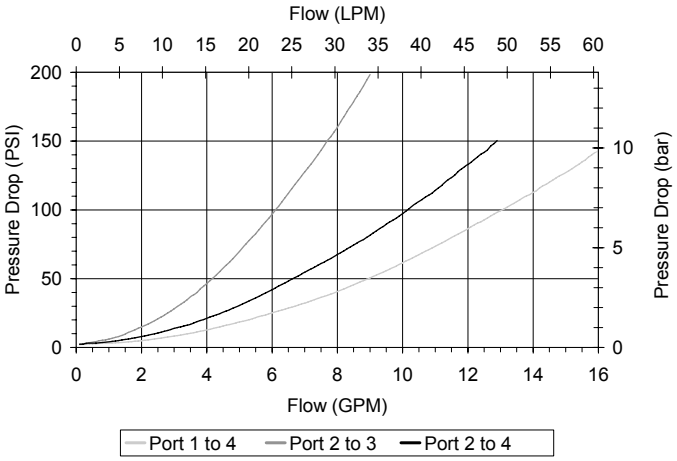


### VALVE SPECIFICATIONS

| | |
|---|---|
| Nominal Flow | 12 GPM (45 LPM)<br>8 GPM (30 LPM) from (2) to (3) |
| Rated Operating Pressure | 3000 PSI (207 bar) |
| Typical Internal Leakage (150 SSU) | 5 cu in/min (82 ml/min) per path |
| Viscosity Range | 36 to 3000 SSU (3 to 647 cSt) |
| Filtration | ISO 18/16/13 |
| Media Operating Temp. Range | -40° to 250°F (-40° to 120°C) |
| Weight | .52 lbs (.23 kg) |
| Operating Fluid Media | General Purpose Hydraulic Fluid |
| Cartridge Torque Requirements | 30 ft-lbs (40.6 Nm) |
| Cavity | DELTA 4W |
| Cavity Form Tool (Finishing) | 40500002 |
| Seal Kit | 21191214 |

**WARNING:** *the specifications/application data shown in our catalogs and data sheets are intended only as a general guide for the product described (herein). Any specific application should not be undertaken without independent study, evaluation, and testing for suitability.*



Via Malavolti, 36 - 41122 Modena - ITALY - Phone +39 (059) 254895 - Fax +39 (059) 253512 - mail: tecnord@tecnord.com - **www.tecnord.com**

## DIMENSIONS

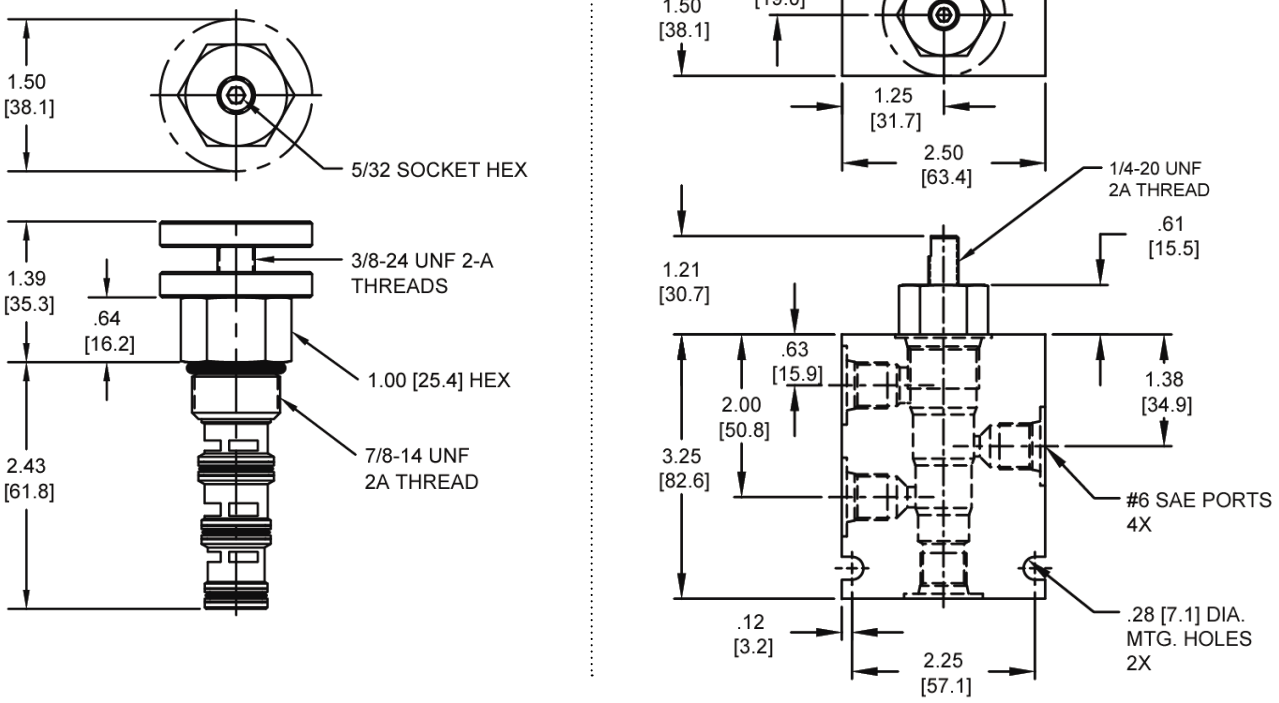


*Body Weight: .99 lbs (.45 kg)*

## ORDERING INFORMATION

**DG-M4C – ____ – ____**

| OPTIONS | | BODIES | |
|---|---|---|---|
| Buna, Standard | **00** | **Blank** | Without Body |
| Viton, Standard | **V0** | **N** | 1/4" NPTF Ports |
| Buna, Knob | **0K** | **S** | #6 SAE Ports |
| Viton, Knob | **VK** | | |

**WARNING:** *the specifications/application data shown in our catalogs and data sheets are intended only as a general guide for the product described (herein). Any specific application should not be undertaken without independent study, evaluation, and testing for suitability.*



Via Malavolti, 36 - 41122 Modena - ITALY - Phone +39 (059) 254895 - Fax +39 (059) 253512 - mail: tecnord@tecnord.com - **www.tecnord.com**

## QS-MRS ROTARY SELECTOR VALVE

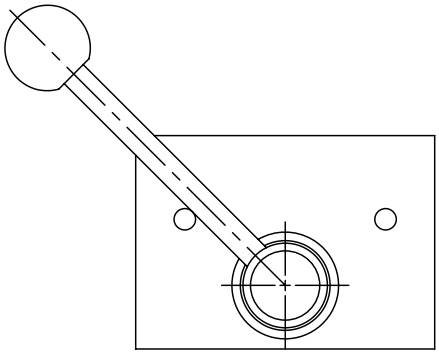

### DESCRIPTION

6 port rotary selector valve.

### OPERATION

The QS-MRS when rotated counter-clockwise allows flow from (A) to (B) & (D) to (E) and blocks (C) & (F). When rotated clockwise, the valve directs flow from (C) to (B) & (F) to (E) and block flow at (A) & (D).

### HYDRAULIC SYMBOL

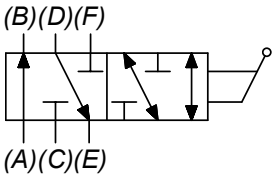


*May be used as metering product. All ports closed in transition. See chart for fully open and fully closed pressure drop.*

### PERFORMANCE

Actual Test Data (Cartridge Only)

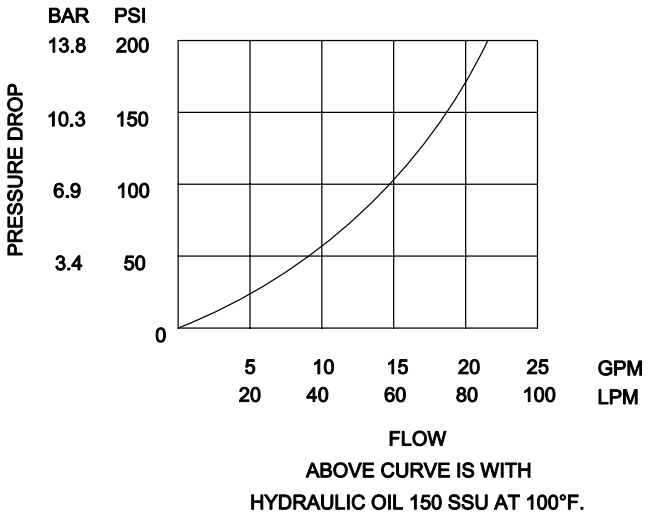


ABOVE CURVE IS WITH
HYDRAULIC OIL 150 SSU AT 100°F.

### VALVE SPECIFICATIONS

| | |
|---|---|
| Nominal Flow | 25 GPM (95 LTR/M) |
| Rated Operating Pressure | 3000 PSI (207 bar) |
| Typical Internal Leakage (150 SSU) | 1 cu in/min (16 ml/min) |
| Viscosity Range | 36 to 3000 SSU (3 to 647 cSt) |
| Filtration | ISO 18/16/13 |
| Media Operating Temp. Range | -40° to 250°F (-40° to 120°C) |
| Weight | 3.42 lbs (1.55 kg) |
| Operating Fluid Media | General Purpose Hydraulic Fluid |

**WARNING:** *the specifications/application data shown in our catalogs and data sheets are intended only as a general guide for the product described (herein). Any specific application should not be undertaken without independent study, evaluation, and testing for suitability.*



Via Malavolti, 36 - 41122 Modena - ITALY - Phone +39 (059) 254895 - Fax +39 (059) 253512 - mail: tecnord@tecnord.com - **www.tecnord.com**

## DIMENSIONS

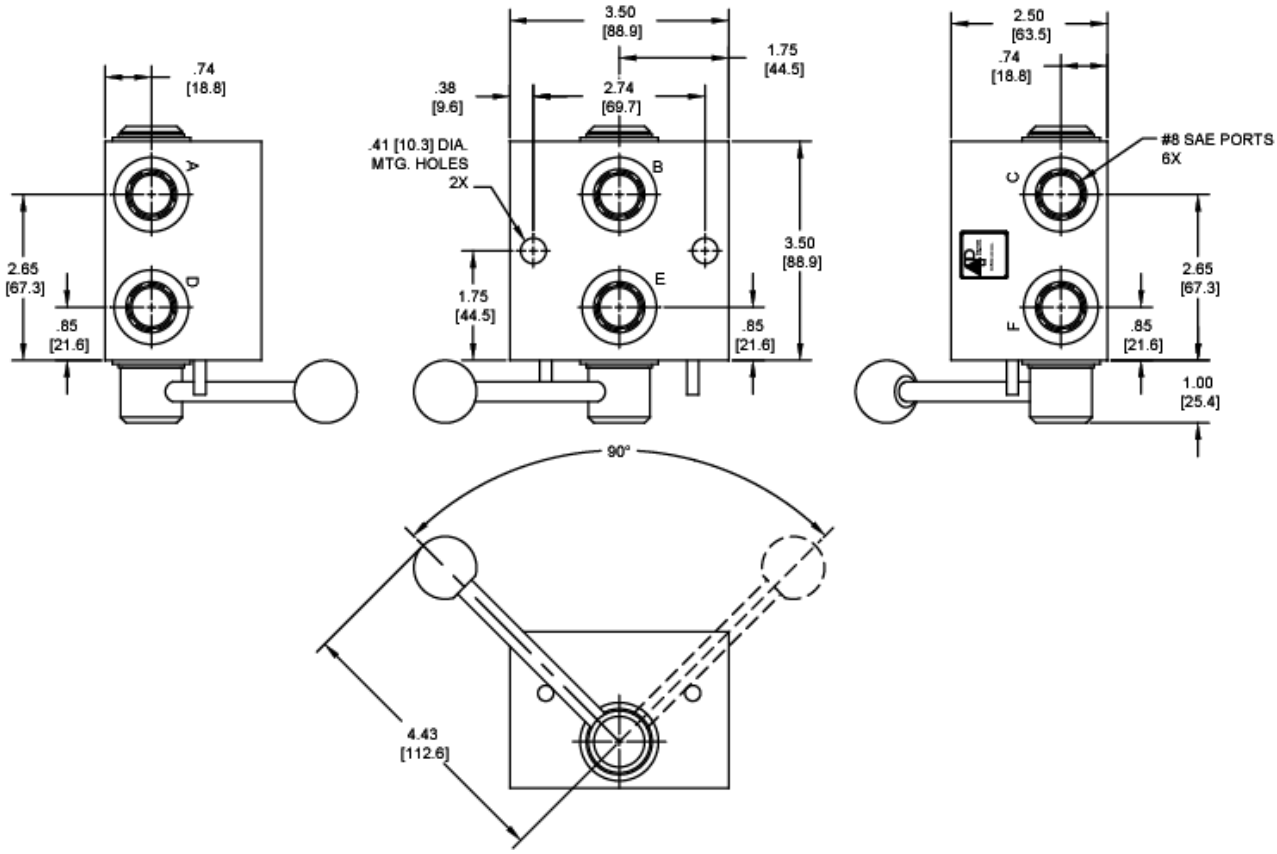


## ORDERING INFORMATION

**QS-MRS – _____ – _____**

| OPTIONS | | BODIES | |
|---|---|---|---|
| Buna Standard | **00** | **N** | 1/2” NPT Ports |
| Viton Standard | **V0** | **S** | #8 SAE Ports |

**WARNING:** *the specifications/application data shown in our catalogs and data sheets are intended only as a general guide for the product described (herein). Any specific application should not be undertaken without independent study, evaluation, and testing for suitability.*



Via Malavolti, 36 - 41122 Modena - ITALY - Phone +39 (059) 254895 - Fax +39 (059) 253512 - mail: tecnord@tecnord.com - **www.tecnord.com**

# MECHANICAL FLOW CONTROLS

Section / Description page

**FLOW RESTRICTORS, ADJUSTABLE (NEEDLE VALVES)** ..... MF3

**PRESSURE COMPENSATED FLOW REGULATOR VALVES** ..... MF21

**PRIORITY FLOW REGULATOR VALVES** ..... MF47

**VELOCITY FUSES** ..... MF71

**FLOW DIVIDER/COMBINER VALVES** ..... MF77

**LOGIC ELEMENTS** ..... MF89

**HAND PUMPS** ..... MF97

**WARNING:** *the specifications/application data shown in our catalogs and data sheets are intended only as a general guide for the product described (herein). Any specific application should not be undertaken without independent study, evaluation, and testing for suitability.*

W 50/ 2022

Via Malavolti, 36 - 41122 Modena - ITALY - Phone +39 (059) 254895 - Fax +39 (059) 253512 - mail: tecnord@tecnord.com - **www.tecnord.com**

**WARNING:** *the specifications/application data shown in our catalogs and data sheets are intended only as a general guide for the product described (herein). Any specific application should not be undertaken without independent study, evaluation, and testing for suitability.*



Via Malavolti, 36 - 41122 Modena - ITALY - Phone +39 (059) 254895 - Fax +39 (059) 253512 - mail: tecnord@tecnord.com - **www.tecnord.com**

## NEEDLE VALVES – FLOW RESTRICTORS

| | GPM | PSI | LPM | BAR | CAVITY | MODEL | PAGE |
|---|---|---|---|---|---|---|---|
| 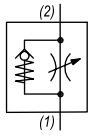 | 12 | 3500 | 45 | 241 | 7/8-14 | **DE-FCH** | MF4 |
| 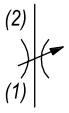 | 6 | 3500 | 23 | 241 | 5/8-18 | **MA-NVA** | MF6 |
| | 6 | 3500 | 23 | 241 | 3/4-16 | **PB-NVA** | MF8 |
| | 10 | 3500 | 38 | 241 | 7/8-14 | **DE-NVA** | MF10 |
| | 35 | 5000 | 132 | 345 | 1 1/16-12 | **HT-NVA** | MF12 |
| | 40 | 3500 | 151 | 241 | 1 5/16-12 | **SJ-NVA** | MF14 |
| | 3 | 3500 | 11 | 241 | 3/4-16 | **PB-NVB** | MF16 |
| | 15 | 3500 | 57 | 241 | 7/8-14 | **DE-NVB** | MF18 |

## TYPICAL SCHEMATIC

Typical application for an NVA/NVB is to meter flow to an actuator. In the example shown, the valve is used to allow a hydraulic motor to be manually unloaded, so that the vehicle can be towed.

Typical application for the FCH is to meter flow in one direction while allowing free flow in the opposite direction.

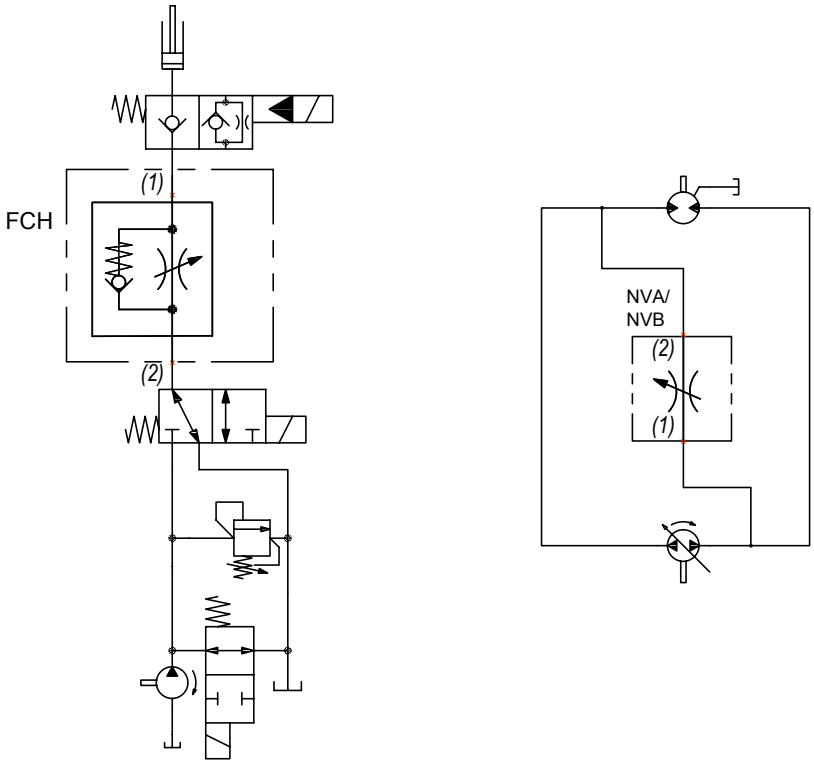


**WARNING:** *the specifications/application data shown in our catalogs and data sheets are intended only as a general guide for the product described (herein). Any specific application should not be undertaken without independent study, evaluation, and testing for suitability.*



Via Malavolti, 36 - 41122 Modena - ITALY - Phone +39 (059) 254895 - Fax +39 (059) 253512 - mail: tecnord@tecnord.com - **www.tecnord.com**

## DE-FCH ADJUSTABLE FLOW CONTROL VALVE, SPOOL TYPE, FREE REVERSE FLOW

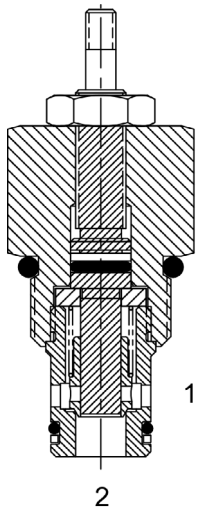


### DESCRIPTION

10 size, 7/8-14 thread, “Delta” adjustable needle flow control valve with free reverse flow.

### OPERATION

The DE-FCH increases its orifice value from fully closed to fully open by turning screw counterclockwise. When adjusted open the valves regulates flow (1) to (2). When fully closed the valve restricts flow from (1) to (2).

### FEATURES

- Hardened parts for long life.
- Industry common cavity.

### HYDRAULIC SYMBOL

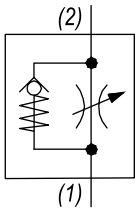


### VALVE SPECIFICATIONS

| | |
|---|---|
| Nominal Flow | 12 GPM (45 LPM) |
| Rated Operating Pressure | 3500 PSI (241 bar) |
| Filtration | ISO 18/16/13 |
| Media Operating Temp. Range | -40° to 250°F (-40° to 120°C) |
| Weight | .32 lbs (.15 kg) |
| Operating Fluid Media | General Purpose Hydraulic Fluid |
| Cartridge Torque Requirements | 30 ft-lbs (40.6 Nm) |
| Cavity | DELTA 2W |
| Cavity Form Tool (Finishing) | 40500000 |
| Seal Kit | 21191200 |

### PERFORMANCE

Actual Test Data (Cartridge Only)

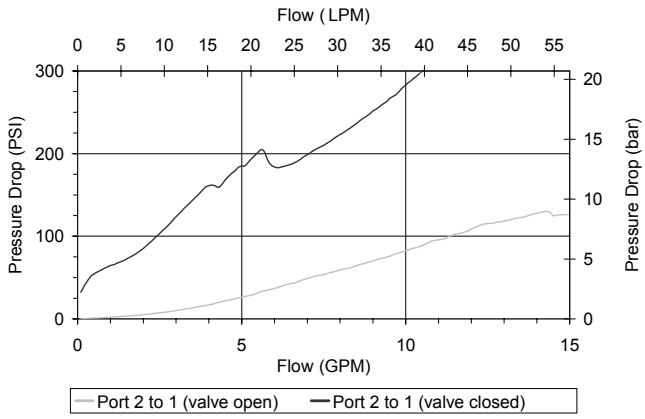


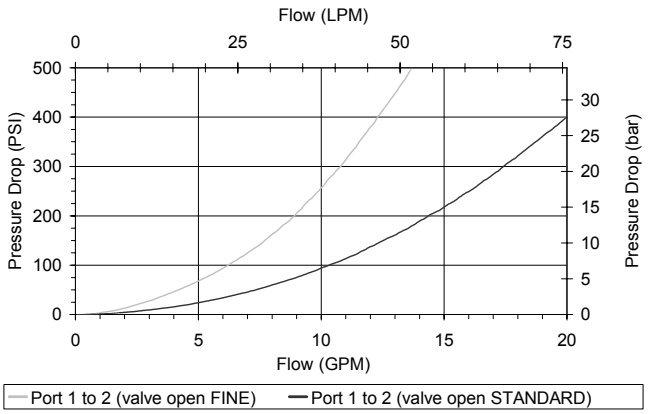


**WARNING:** *the specifications/application data shown in our catalogs and data sheets are intended only as a general guide for the product described (herein). Any specific application should not be undertaken without independent study, evaluation, and testing for suitability.*



Via Malavolti, 36 - 41122 Modena - ITALY - Phone +39 (059) 254895 - Fax +39 (059) 253512 - mail: tecnord@tecnord.com - **www.tecnord.com**

## DIMENSIONS

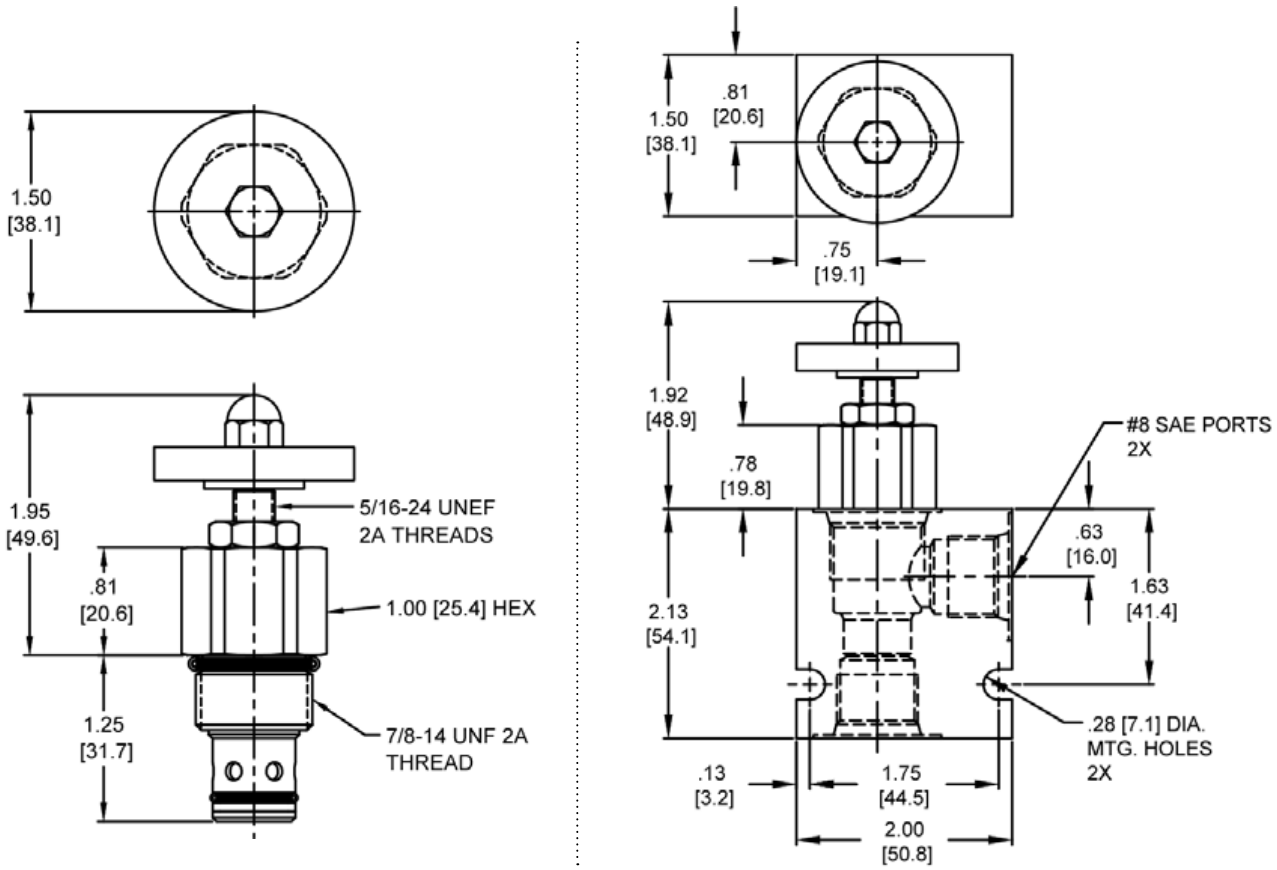


*Body Weight: .47 lbs (.21 kg)*

## ORDERING INFORMATION

**DE-FCH** – _____ – _____ – _____

**OPTIONS**

| | |
|---|---|
| Buna Standard | **00** |
| Viton Standard | **V0** |
| Buna, Knob | **0K** |
| Viton, Knob | **VK** |
| Buna, Screen | **A0** |
| Viton, Screen | **W0** |
| Buna, Screen, Knob | **AK** |
| Viton, Screen, Knob | **WK** |

**Note: use screen only if flow direction is from (1) to (2).**

**ADJUSTMENTS**

| | |
|---|---|
| **FINE** | Fine Adjustment |
| **STRD** | Standard Adjustment |

**BODIES**

| | |
|---|---|
| **Blank** | Without Body |
| **N** | 3/8" NPT Ports |
| **S** | #8 SAE Ports |

**WARNING:** *the specifications/application data shown in our catalogs and data sheets are intended only as a general guide for the product described (herein). Any specific application should not be undertaken without independent study, evaluation, and testing for suitability.*



Via Malavolti, 36 - 41122 Modena - ITALY - Phone +39 (059) 254895 - Fax +39 (059) 253512 - mail: tecnord@tecnord.com - **www.tecnord.com**

## MA-NVA ADJUSTABLE FLOW CONTROL VALVE, NEEDLE TYPE

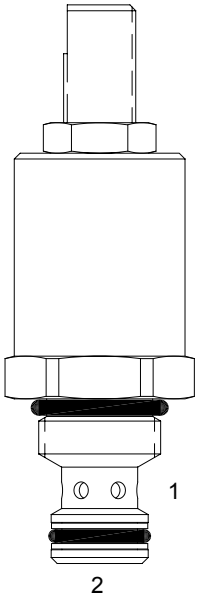


### DESCRIPTION

7 size, 5/8-18 thread, “Mini” series, needle flow control valve.

### OPERATION

The MA-NVA adjusts from fully open to fully closed by turning adjusting screw clockwise. When adjusted open the valve allows flow (1) to (2) and (2) to (1). When fully closed the valve blocks flow from (1) to (2) and (2) to (1).

### FEATURES

- Hardened parts for long life.
- Industry common cavity.

### HYDRAULIC SYMBOL

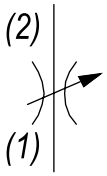


### PERFORMANCE

Actual Test Data (Cartridge Only)

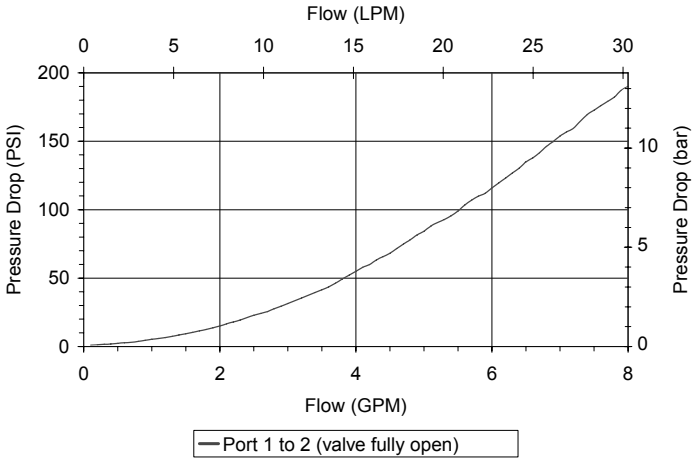


### VALVE SPECIFICATIONS

| | |
|---|---|
| Nominal Flow | 6 GPM (23 LPM) |
| Rated Operating Pressure | 3500 PSI (241 bar) |
| Viscosity Range | 36 to 3000 SSU (3 to 647 cSt) |
| Filtration | ISO 18/16/13 |
| Media Operating Temp. Range | -40° to 250°F (-40° to 120°C) |
| Weight | .24 lbs (.11 kg) |
| Operating Fluid Media | General Purpose Hydraulic Fluid |
| Cartridge Torque Requirements | 15 ft-lbs (20.3 Nm) |
| Cavity | MINI 2W |
| Cavity Form Tool (Finishing) | 40500003 |
| Seal Kit | 21191202 |

**WARNING:** *the specifications/application data shown in our catalogs and data sheets are intended only as a general guide for the product described (herein). Any specific application should not be undertaken without independent study, evaluation, and testing for suitability.*



Via Malavolti, 36 - 41122 Modena - ITALY - Phone +39 (059) 254895 - Fax +39 (059) 253512 - mail: tecnord@tecnord.com - **www.tecnord.com**

## DIMENSIONS

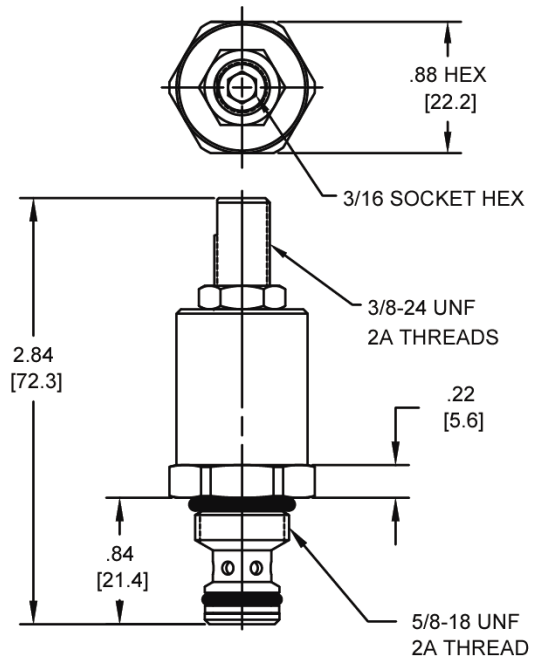


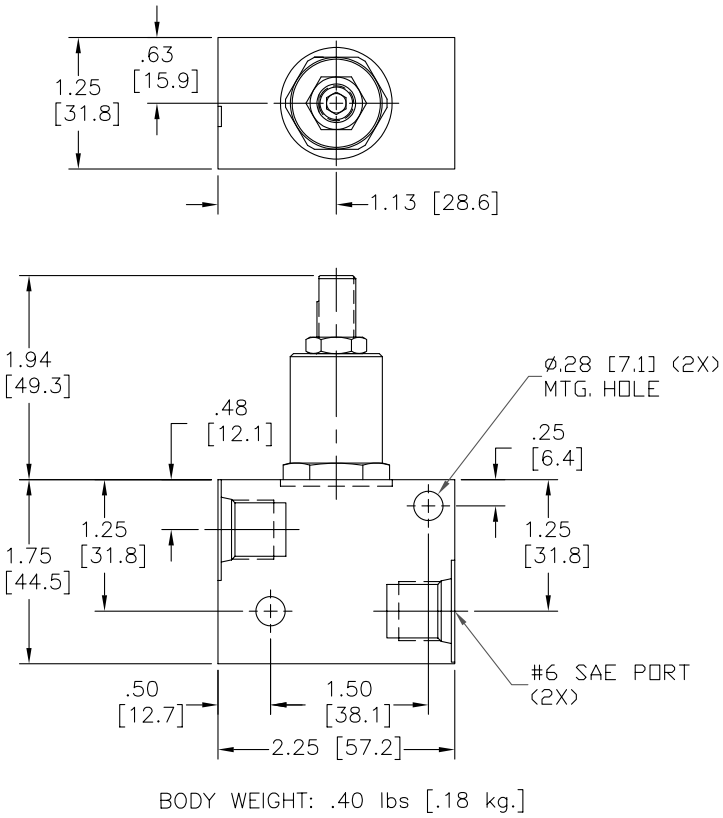


*Body Weight: .29 lbs (.13 kg)*

## ORDERING INFORMATION

**MA-NVA –** _____ **–** _____

| OPTIONS | | BODIES | |
|---|---|---|---|
| Buna Standard | **00** | **Blank** | Without Body |
| Viton Standard | **V0** | **N** | 1/4" NPTF Ports |
| Buna, Knob | **0K** | **S** | #6 SAE Ports |
| Viton, Knob | **VK** | | |

**WARNING:** *the specifications/application data shown in our catalogs and data sheets are intended only as a general guide for the product described (herein). Any specific application should not be undertaken without independent study, evaluation, and testing for suitability.*



Via Malavolti, 36 - 41122 Modena - ITALY - Phone +39 (059) 254895 - Fax +39 (059) 253512 - mail: tecnord@tecnord.com - **www.tecnord.com**

## PB-NVA ADJUSTABLE FLOW CONTROL VALVE, NEEDLE TYPE

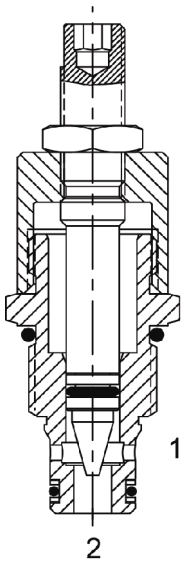


### DESCRIPTION

8 size, 3/4-16 thread, “Power” series, needle flow control.

### OPERATION

The PB-NVA adjusts from fully open to fully closed by turning adjusting screw clockwise. When adjusted open the valve allows flow from (1) to (2) and (2) to (1). When fully closed the valve blocks flow from (1) to (2) and (2) to (1).

### FEATURES

- Hardened parts for long life.
- Industry common cavity.

### HYDRAULIC SYMBOL

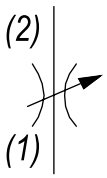


### PERFORMANCE

Actual Test Data (Cartridge Only)

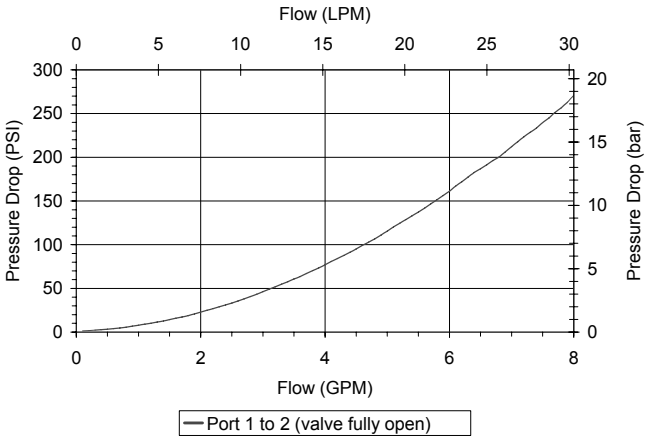


### VALVE SPECIFICATIONS

| | |
|---|---|
| Nominal Flow | 6 GPM (23 LPM) |
| Rated Operating Pressure | 3500 PSI (241 bar) |
| Viscosity Range | 36 to 3000 SSU (3 to 647 cSt) |
| Filtration | ISO 18/16/13 |
| Media Operating Temp. Range | -40° to 250°F (-40° to 120°C) |
| Weight | .22 lbs (.10 kg) |
| Operating Fluid Media | General Purpose Hydraulic Fluid |
| Cartridge Torque Requirements | 25 ft-lbs (34 Nm) |
| Cavity | POWER 2W |
| Cavity Form Tool (Finishing) | 40500005 |
| Seal Kit | 21191102 |

**WARNING:** *the specifications/application data shown in our catalogs and data sheets are intended only as a general guide for the product described (herein). Any specific application should not be undertaken without independent study, evaluation, and testing for suitability.*



Via Malavolti, 36 - 41122 Modena - ITALY - Phone +39 (059) 254895 - Fax +39 (059) 253512 - mail: tecnord@tecnord.com - **www.tecnord.com**

## DIMENSIONS

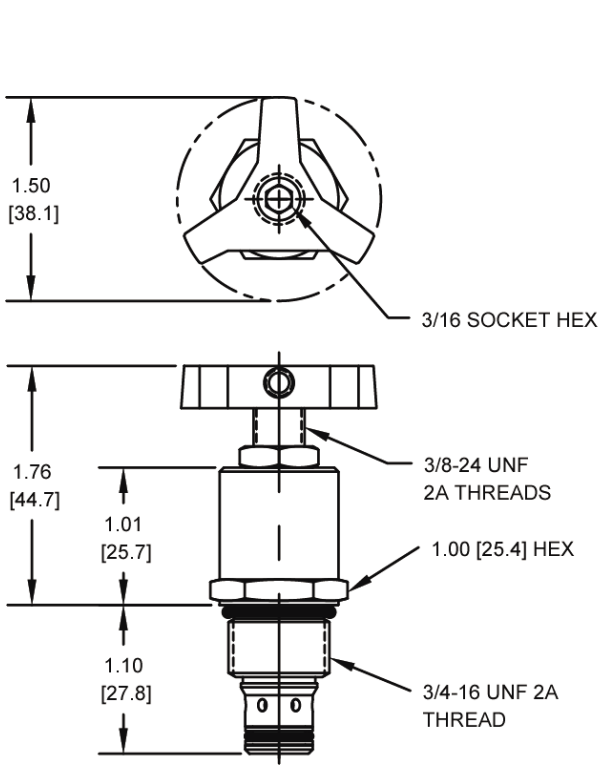


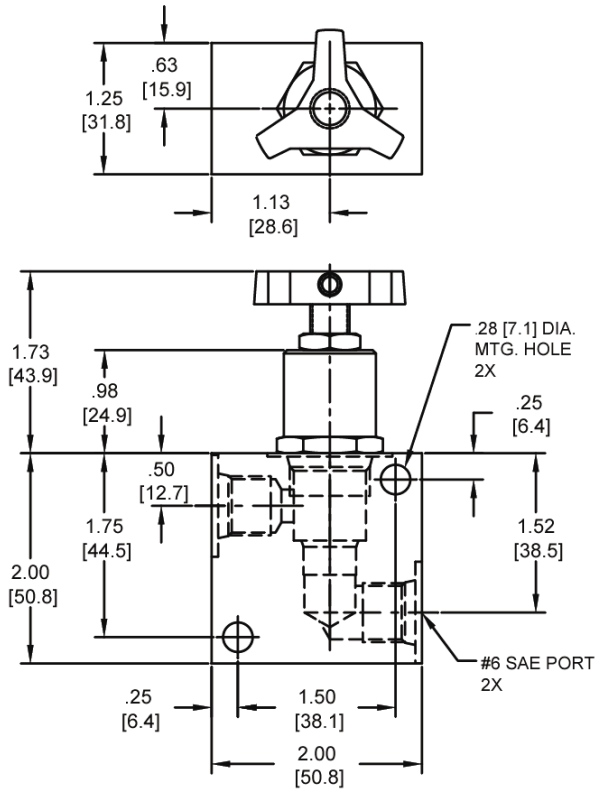


*Body Weight: .39 lbs (.18 kg)*

## ORDERING INFORMATION

**PB-NVA –** _____ **–** _____

| OPTIONS | | BODIES | |
|---|---|---|---|
| Buna Standard | **00** | **Blank** | Without Body |
| Viton Standard | **V0** | **N** | 1/4” NPTF Ports |
| Buna, Knob | **0K** | **S** | #6 SAE Ports |
| Viton, Knob | **VK** | | |
| Buna, Screen | **A0** | | |
| Viton, Screen | **W0** | | |
| Buna, Screen, Knob | **AK** | | |
| Viton, Screen, Knob | **WK** | | |

**Note: use screen only if flow direction is from (1) to (2).**

**WARNING:** *the specifications/application data shown in our catalogs and data sheets are intended only as a general guide for the product described (herein). Any specific application should not be undertaken without independent study, evaluation, and testing for suitability.*



Via Malavolti, 36 - 41122 Modena - ITALY - Phone +39 (059) 254895 - Fax +39 (059) 253512 - mail: tecnord@tecnord.com - **www.tecnord.com**

## DE-NVA ADJUSTABLE FLOW CONTROL VALVE, NEEDLE TYPE, FINE ADJUST

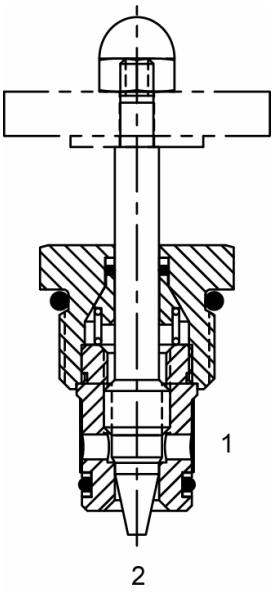


### DESCRIPTION

10 size, 7/8-14 thread, “Delta” series fine adjust needle flow control valve.

### OPERATION

The DE-NVA adjusts from fully open to fully closed by turning adjusting screw counterclockwise. When adjusted open the valve allows flow (1) to (2) and (2) to (1). When fully closed the valve blocks flow from (1) to (2) and (2) to (1).

### FEATURES

- Hardened parts for long life.
- Industry common cavity.

### HYDRAULIC SYMBOL

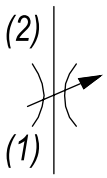


### PERFORMANCE

Actual Test Data (Cartridge Only)

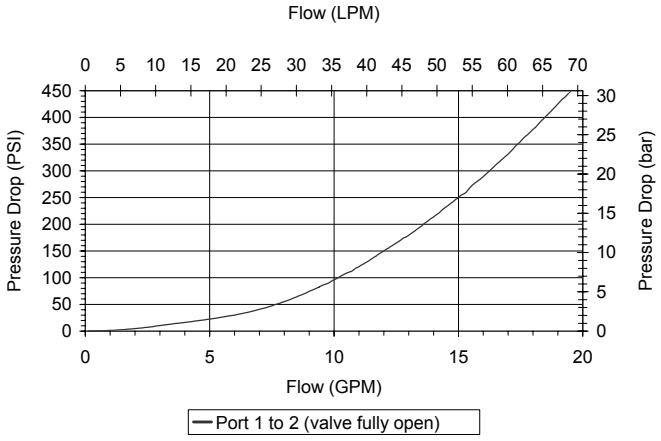


### VALVE SPECIFICATIONS

| | |
|---|---|
| Nominal Flow | 10 GPM (38 LPM) |
| Rated Operating Pressure | 3500 PSI (241 bar) |
| Viscosity Range | 36 to 3000 SSU (3 to 647 cSt) |
| Filtration | ISO 18/16/13 |
| Media Operating Temp. Range | -40° to 250°F (-40° to 120°C) |
| Weight | .19 lbs (.09 kg) |
| Operating Fluid Media | General Purpose Hydraulic Fluid |
| Cartridge Torque Requirements | 30 ft-lbs (40.6 Nm) |
| Cavity | DELTA 2W |
| Cavity Form Tool (Finishing) | 40500000 |
| Seal Kit | 21191202 |

**WARNING:** *the specifications/application data shown in our catalogs and data sheets are intended only as a general guide for the product described (herein). Any specific application should not be undertaken without independent study, evaluation, and testing for suitability.*



Via Malavolti, 36 - 41122 Modena - ITALY - Phone +39 (059) 254895 - Fax +39 (059) 253512 - mail: tecnord@tecnord.com - **www.tecnord.com**

## DIMENSIONS

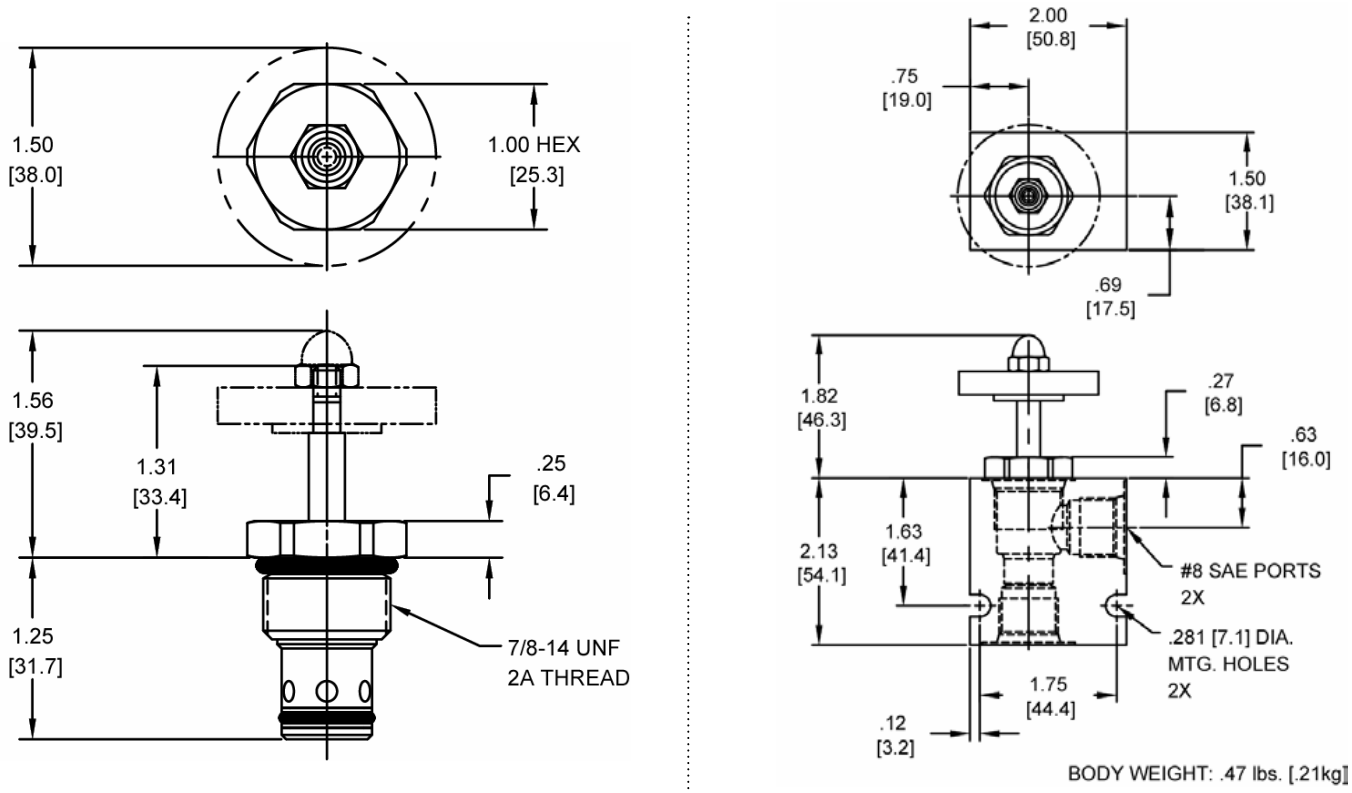


*Body Weight: .47 lbs (.21 kg)*

## ORDERING INFORMATION

**DE-NVA – _____ – _____**

| OPTIONS | |
|---|---|
| Buna Standard | **00** |
| Viton Standard | **V0** |
| Buna, Knob | **0K** |
| Viton, Knob | **VK** |
| Buna, Screen | **A0** |
| Viton, Screen | **W0** |
| Buna, Screen, Knob | **AK** |
| Viton, Screen, Knob | **WK** |

**Note: use screen only if flow direction is from (1) to (2).**

| BODIES | |
|---|---|
| **Blank** | Without Body |
| **N** | 3/8" NPTF Ports |
| **S** | #8 SAE Ports |

**WARNING:** *the specifications/application data shown in our catalogs and data sheets are intended only as a general guide for the product described (herein). Any specific application should not be undertaken without independent study, evaluation, and testing for suitability.*



Via Malavolti, 36 - 41122 Modena - ITALY - Phone +39 (059) 254895 - Fax +39 (059) 253512 - mail: tecnord@tecnord.com - **www.tecnord.com**

## HT-NVA ADJUSTABLE FLOW CONTROL VALVE, NEEDLE TYPE

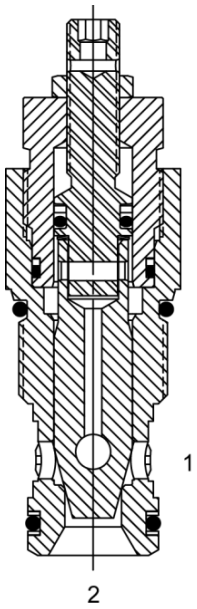


### DESCRIPTION

"High Pressure" 12 size, 1 1/16-12 thread, "Tecnord" series, needle flow control valve.

### OPERATION

The HT-NVA adjusts from fully open to fully closed by turning adjusting screw clockwise. When adjusted open the valve allows flow (1) to (2) and (2) to (1). When fully closed the valve blocks flow from (1) to (2) and (2) to (1).

### FEATURES

- Hardened parts for long life.
- Industry common cavity.

### HYDRAULIC SYMBOL

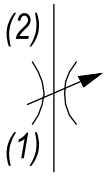


*Valves with the knob option are NOT to be adjusted under pressure.*

### PERFORMANCE

Actual Test Data (Cartridge Only)

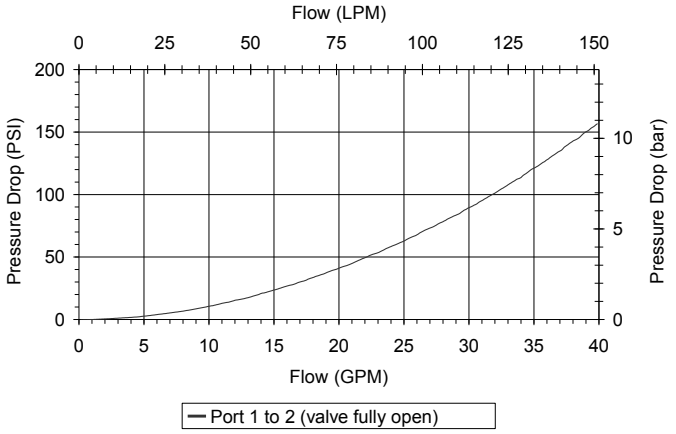


### VALVE SPECIFICATIONS

| | |
|---|---|
| Nominal Flow | 35 GPM (132 LPM) |
| Rated Operating Pressure | 5000 PSI (345 bar) |
| Viscosity Range | 36 to 3000 SSU (3 to 647 cSt) |
| Filtration | ISO 18/16/13 |
| Media Operating Temp. Range | -40° to 250°F (-40° to 120°C) |
| Weight | .72 lbs (.32 kg) |
| Operating Fluid Media | General Purpose Hydraulic Fluid |
| Cartridge Torque Requirements | 70 ft-lbs (95 Nm) |
| Cavity | TECNORD 2W |
| Cavity Form Tool (Finishing) | 40500032 |
| Seal Kit | 21191302 |

**WARNING:** *the specifications/application data shown in our catalogs and data sheets are intended only as a general guide for the product described (herein). Any specific application should not be undertaken without independent study, evaluation, and testing for suitability.*



Via Malavolti, 36 - 41122 Modena - ITALY - Phone +39 (059) 254895 - Fax +39 (059) 253512 - mail: tecnord@tecnord.com - **www.tecnord.com**

## DIMENSIONS

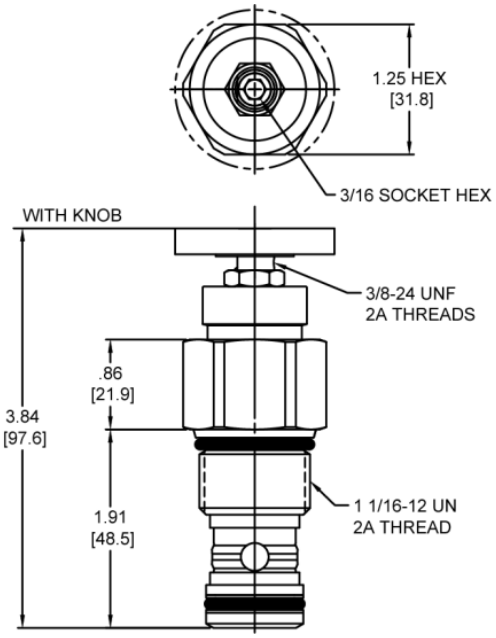


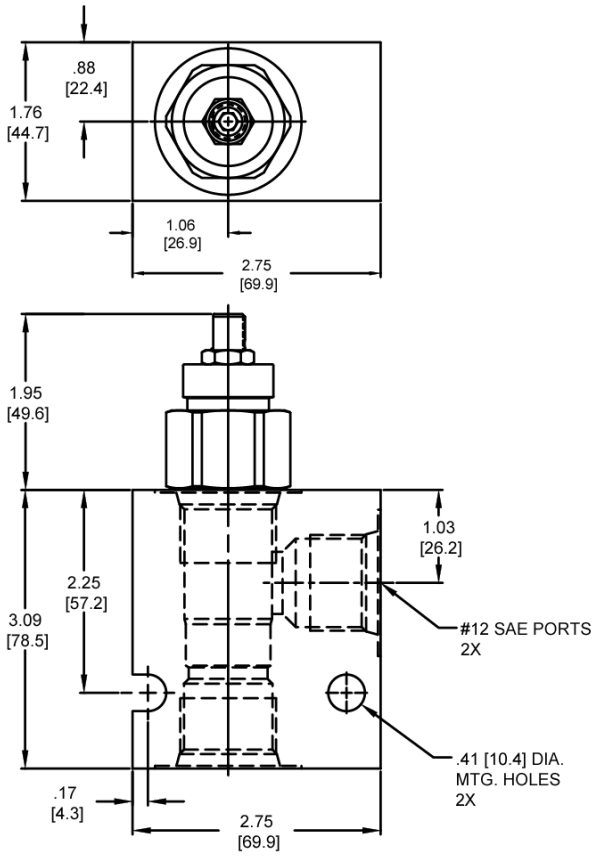


*Body Weight: 3.71 lbs (1.68 kg)*

## ORDERING INFORMATION

**HT-NVA – ____ – ____**

| OPTIONS | |
|---|---|
| Buna Standard | **00** |
| Viton Standard | **V0** |
| Buna, Knob | **0K** |
| Viton, Knob | **VK** |
| Buna, Screen | **A0** |
| Viton, Screen | **W0** |
| Buna, Screen, Knob | **AK** |
| Viton, Screen, Knob | **WK** |

**Note: use screen only if flow direction is from (1) to (2).**

| BODIES | |
|---|---|
| **Blank** | Without Body |
| **S** | #12 SAE Ports |

**WARNING:** *the specifications/application data shown in our catalogs and data sheets are intended only as a general guide for the product described (herein). Any specific application should not be undertaken without independent study, evaluation, and testing for suitability.*



Via Malavolti, 36 - 41122 Modena - ITALY - Phone +39 (059) 254895 - Fax +39 (059) 253512 - mail: tecnord@tecnord.com - **www.tecnord.com**

## SJ-NVA ADJUSTABLE FLOW CONTROL VALVE, NEEDLE TYPE

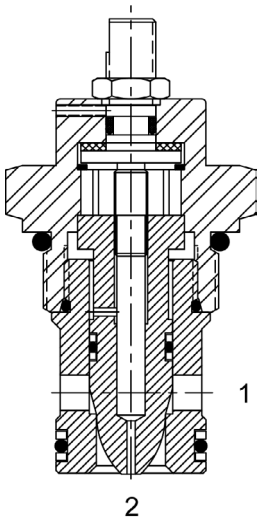


### DESCRIPTION

16 size, 1 5/16-12 thread, “Super” series, needle flow control valve.

### OPERATION

The SJ-NVA adjusts from fully open to fully closed by turning the adjustment screw clockwise. When adjusted open the valves regulates flow (1) to (2) or (2) to (1). When fully closed the valve blocks flow from (1) to (2) or (2) to (1).

### FEATURES

- Hardened parts for long life.
- Industry common cavity.

### HYDRAULIC SYMBOL

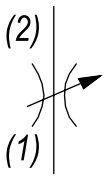


### PERFORMANCE

Actual Test Data (Cartridge Only)

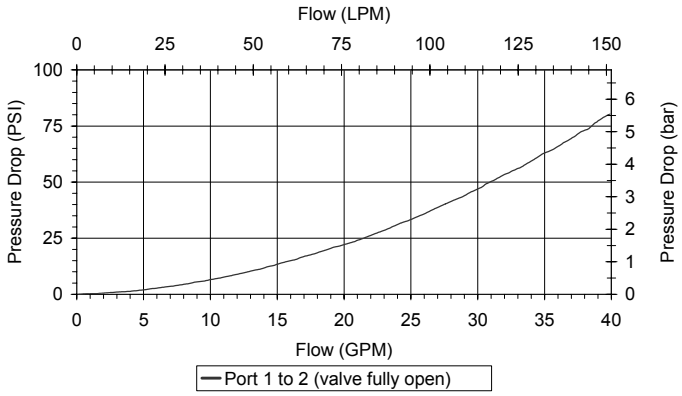


### VALVE SPECIFICATIONS

| | |
|---|---|
| Nominal Flow | 40 GPM (151 LPM) |
| Rated Operating Pressure | 3500 PSI (241 bar) |
| Viscosity Range | 36 to 3000 SSU (3 to 647 cSt) |
| Filtration | ISO 18/16/13 |
| Media Operating Temp. Range | -35° to 200°F (-37.2° to 93.3°C) |
| Weight | .83 lbs (.37 kg) |
| Operating Fluid Media | General Purpose Hydraulic Fluid |
| Cartridge Torque Requirements | 90 ft-lbs (122 Nm) |
| Cavity | SUPER 2W |
| Cavity Form Tool (Finishing) | 40500017 |
| Seal Kit | 21191402 |

**WARNING:** *the specifications/application data shown in our catalogs and data sheets are intended only as a general guide for the product described (herein). Any specific application should not be undertaken without independent study, evaluation, and testing for suitability.*



Via Malavolti, 36 - 41122 Modena - ITALY - Phone +39 (059) 254895 - Fax +39 (059) 253512 - mail: tecnord@tecnord.com - **www.tecnord.com**

## DIMENSIONS

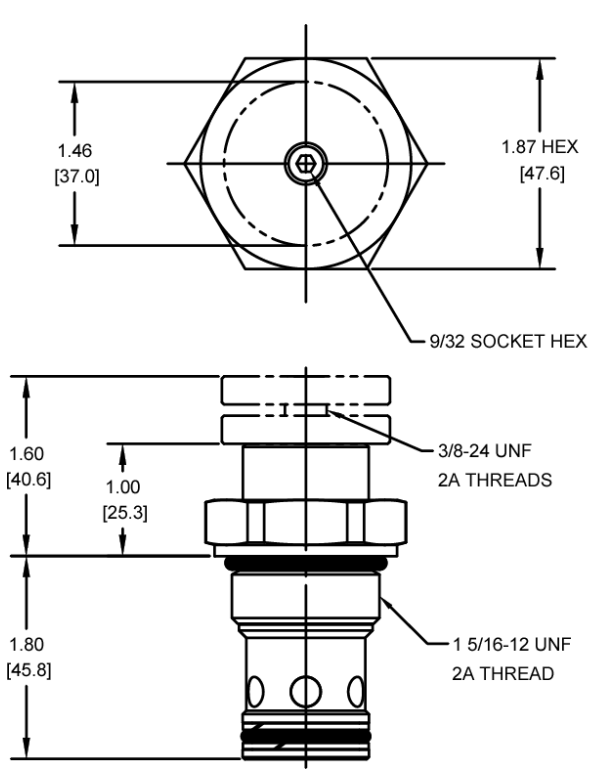


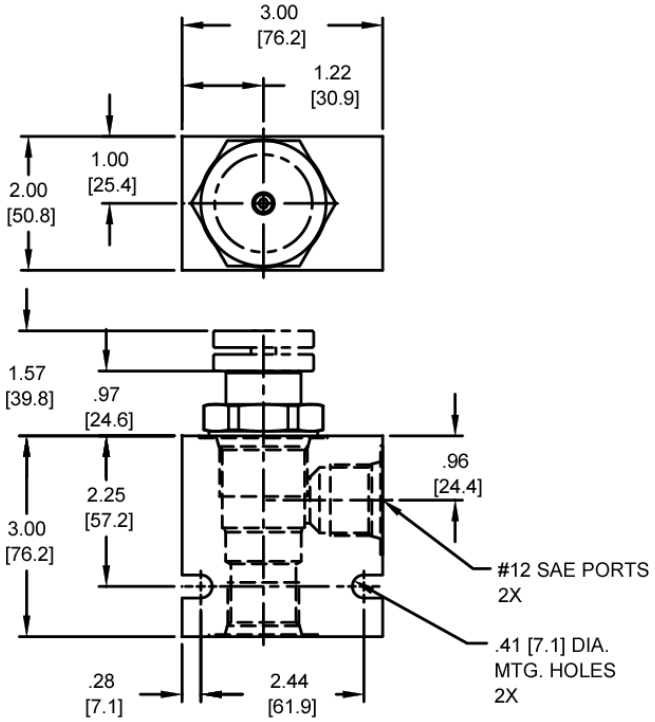


*Body Weight: 1.29 lbs (.58 kg)*

## ORDERING INFORMATION

**SJ-NVA –** _____ **–** _____

| OPTIONS | | BODIES | |
|---|---|---|---|
| Buna Standard | **00** | **Blank** | Without Body |
| Viton Standard | **V0** | **N** | 3/4" NPT Ports |
| Buna, Knob | **0K** | **S** | #12 SAE Ports |
| Viton, Knob | **VK** | | |
| Buna, Internally Adj. | **0I** | | |
| Viton, Internally Adj. | **VI** | | |
| Buna, Tamper Proof | **0T** | | |
| Viton, Tamper Proof | **VT** | | |

**WARNING:** *the specifications/application data shown in our catalogs and data sheets are intended only as a general guide for the product described (herein). Any specific application should not be undertaken without independent study, evaluation, and testing for suitability.*



Via Malavolti, 36 - 41122 Modena - ITALY - Phone +39 (059) 254895 - Fax +39 (059) 253512 - mail: tecnord@tecnord.com - **www.tecnord.com**

## PB-NVB ADJUSTABLE FLOW CONTROL VALVE, NEEDLE TYPE, FINE ADJUST

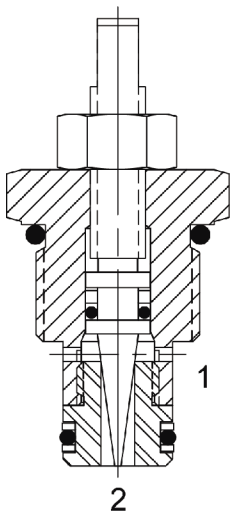


### DESCRIPTION

8 size, 3/4-16 thread, “Power” series, fine adjust needle flow control.

### OPERATION

The PB-NVB adjusts from fully open to fully closed by turning adjusting screw clockwise. When adjusted open the valve allows flow (1) to (2) and (2) to (1). When fully closed the valve blocks flow from (1) to (2) and (2) to (1).

### FEATURES

- Hardened parts for long life.
- Industry common cavity.

### HYDRAULIC SYMBOL

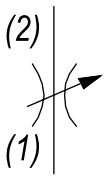


### PERFORMANCE

Actual Test Data (Cartridge Only)

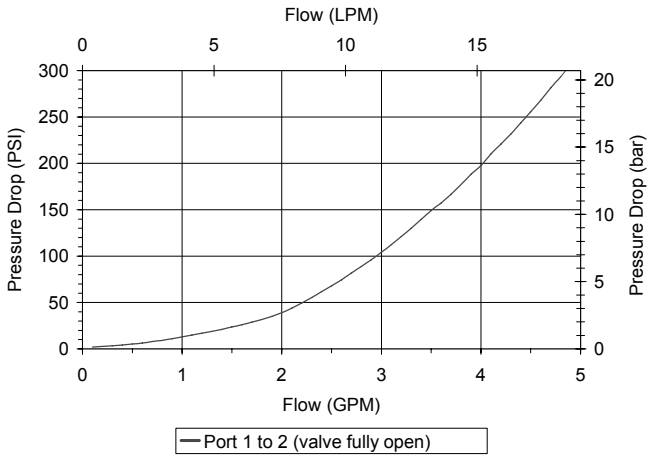


### VALVE SPECIFICATIONS

| | |
|---|---|
| Nominal Flow | 3 GPM (11 LPM) |
| Rated Operating Pressure | 3500 PSI (241 bar) |
| Viscosity Range | 36 to 3000 SSU (3 to 647 cSt) |
| Filtration | ISO 18/16/13 |
| Media Operating Temp. Range | -40° to 250°F (-40° to 120°C) |
| Weight | .13 lbs (.06 kg) |
| Operating Fluid Media | General Purpose Hydraulic Fluid |
| Cartridge Torque Requirements | 30 ft-lbs (40.6 Nm) |
| Cavity | POWER 2W |
| Cavity Form Tool (Finishing) | 40500005 |
| Seal Kit | 21191102 |

**WARNING:** *the specifications/application data shown in our catalogs and data sheets are intended only as a general guide for the product described (herein). Any specific application should not be undertaken without independent study, evaluation, and testing for suitability.*



Via Malavolti, 36 - 41122 Modena - ITALY - Phone +39 (059) 254895 - Fax +39 (059) 253512 - mail: tecnord@tecnord.com - **www.tecnord.com**

## DIMENSIONS

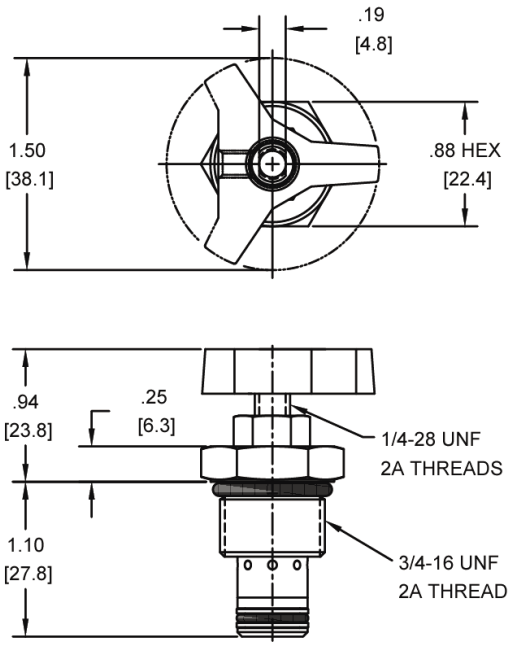


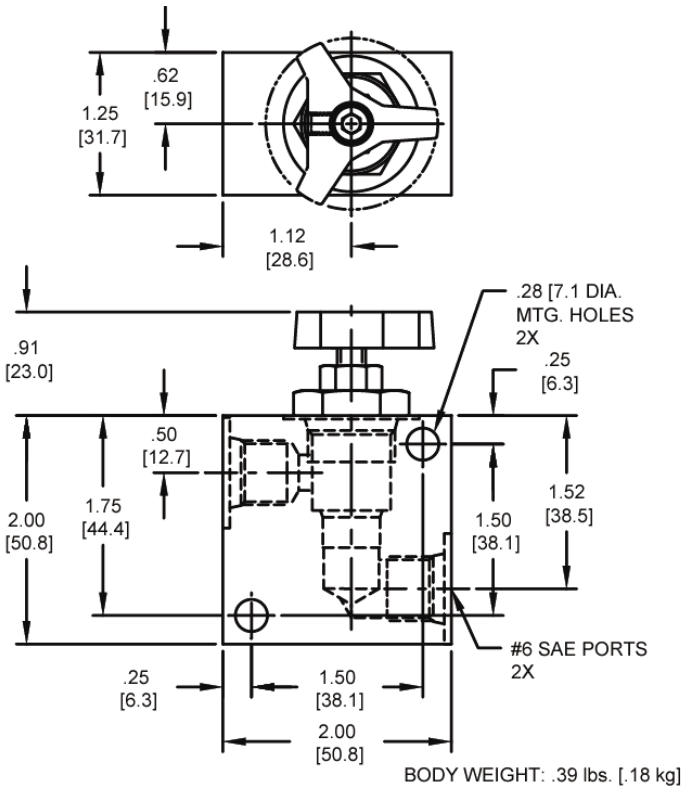


*Body Weight: .39 lbs (.18 kg)*

## ORDERING INFORMATION

**PB-NVB – ____ – ____**

| OPTIONS | |
|---|---|
| Buna Standard | **00** |
| Viton Standard | **V0** |
| Buna, Knob | **0K** |
| Viton, Knob | **VK** |
| Buna, Screen | **A0** |
| Viton, Screen | **W0** |
| Buna, Screen, Knob | **AK** |
| Viton, Screen, Knob | **WK** |

**Note: use screen only if flow direction is from (1) to (2).**

| BODIES | |
|---|---|
| **Blank** | Without Body |
| **N** | 1/4” NPTF Ports |
| **S** | #6 SAE Ports |

**WARNING:** *the specifications/application data shown in our catalogs and data sheets are intended only as a general guide for the product described (herein). Any specific application should not be undertaken without independent study, evaluation, and testing for suitability.*



Via Malavolti, 36 - 41122 Modena - ITALY - Phone +39 (059) 254895 - Fax +39 (059) 253512 - mail: tecnord@tecnord.com - **www.tecnord.com**

## **DE-NVB** ADJUSTABLE FLOW CONTROL VALVE, COARSE ADJUST

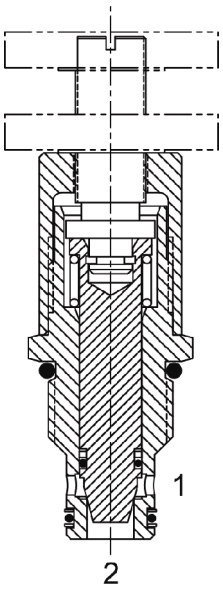


### DESCRIPTION

10 size, 7/8-14 thread, “Delta” series, course adjust needle flow control valve.

### OPERATION

The DE-NVB adjusts from fully open to fully closed by turning adjusting screw clockwise. When adjusted open the valve allows flow (1) to (2) and (2) to (1). When fully closed the valve blocks flow from (1) to (2) and (2) to (1).

### FEATURES

- Hardened parts for long life.
- Industry common cavity.

### HYDRAULIC SYMBOL

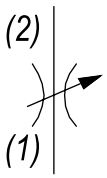


### PERFORMANCE

Actual Test Data (Cartridge Only)

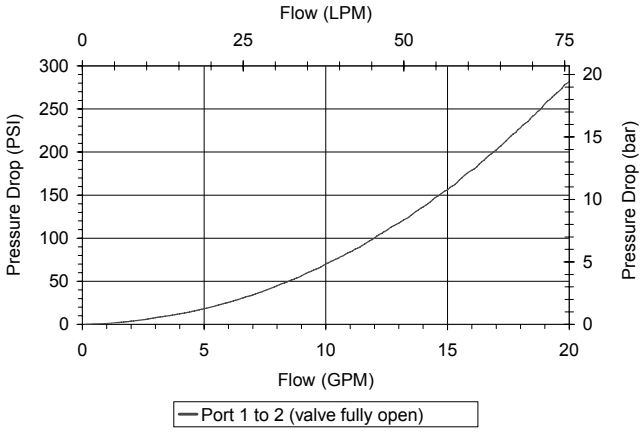


### VALVE SPECIFICATIONS

| | |
|---|---|
| Nominal Flow | 15 GPM (57 LPM) |
| Rated Operating Pressure | 3500 PSI (241 bar) |
| Viscosity Range | 36 to 3000 SSU (3 to 647 cSt) |
| Filtration | ISO 18/16/13 |
| Media Operating Temp. Range | -40° to 250°F (-40° to 120°C) |
| Weight | .47 lbs (.21 kg) |
| Operating Fluid Media | General Purpose Hydraulic Fluid |
| Cartridge Torque Requirements | 30 ft-lbs (40.6 Nm) |
| Cavity | DELTA 2W |
| Cavity Form Tool (Finishing) | 40500000 |
| Seal Kit | 21191202 |

**WARNING:** *the specifications/application data shown in our catalogs and data sheets are intended only as a general guide for the product described (herein). Any specific application should not be undertaken without independent study, evaluation, and testing for suitability.*



Via Malavolti, 36 - 41122 Modena - ITALY - Phone +39 (059) 254895 - Fax +39 (059) 253512 - mail: tecnord@tecnord.com - **www.tecnord.com**

## DIMENSIONS

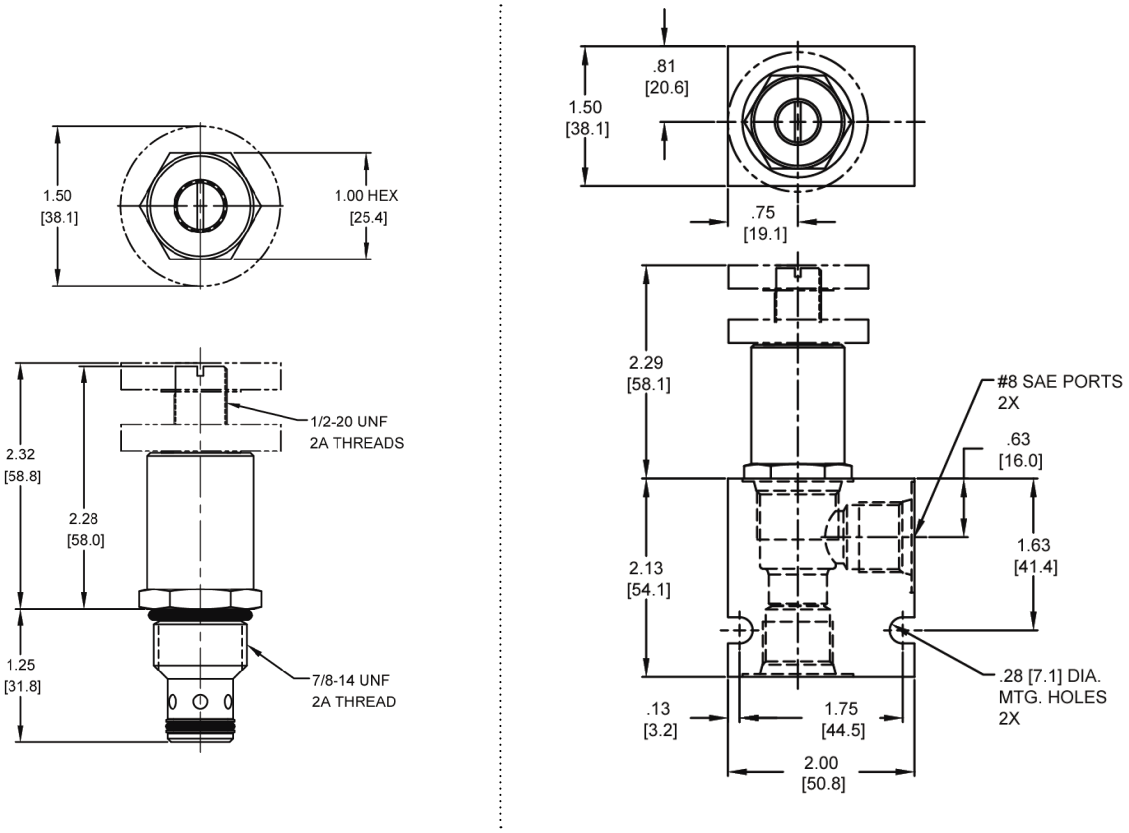


*Body Weight: .47 lbs (.21 kg)*

## ORDERING INFORMATION

**DE-NVB – _____ – _____**

| OPTIONS | |
|---|---|
| Buna Standard | **00** |
| Viton Standard | **V0** |
| Buna, Knob | **0K** |
| Viton, Knob | **VK** |
| Buna, Screen | **A0** |
| Viton, Screen | **W0** |
| Buna, Screen, Knob | **AK** |
| Viton, Screen, Knob | **WK** |

**Note: use screen only if flow direction is from (1) to (2).**

| BODIES | |
|---|---|
| **Blank** | Without Body |
| **N** | 3/8” NPT Ports |
| **S** | #8 SAE Ports |

**WARNING:** *the specifications/application data shown in our catalogs and data sheets are intended only as a general guide for the product described (herein). Any specific application should not be undertaken without independent study, evaluation, and testing for suitability.*



Via Malavolti, 36 - 41122 Modena - ITALY - Phone +39 (059) 254895 - Fax +39 (059) 253512 - mail: tecnord@tecnord.com - **www.tecnord.com**

**WARNING:** *the specifications/application data shown in our catalogs and data sheets are intended only as a general guide for the product described (herein). Any specific application should not be undertaken without independent study, evaluation, and testing for suitability.*



Via Malavolti, 36 - 41122 Modena - ITALY - Phone +39 (059) 254895 - Fax +39 (059) 253512 - mail: tecnord@tecnord.com - **www.tecnord.com**

## PRESSURE COMPENSATED FLOW REGULATOR VALVES

| | GPM | PSI | LPM | BAR | CAVITY | MODEL | PAGE |
|---|---|---|---|---|---|---|---|
| | 3 | 3000 | 11 | 207 | 5/8-18 | **MA-FCA** | MF22 |
| | 4 | 3500 | 15 | 241 | 3/4-16 | **PB-FCA** | MF24 |
| | 8 | 3500 | 30 | 241 | 7/8-14 | **DE-FCA** | MF26 |
| | 5 | 3500 | 19 | 241 | 3/4-16 | **PB-FCC** | MF28 |
| | 11 | 3500 | 41.5 | 241 | 7/8-14 | **DE-FCC** | MF30 |
| | 12 | 3500 | 45 | 241 | 7/8-14 | **DE-FAR** | MF32 |
| | 18 | 5000 | 68 | 345 | 1 1/16 -12 | **HT-FCA** | MF34 |
| | 25 | 3500 | 95 | 241 | 1 5/16 -12 | **SJ-FCA** | MF36 |
| | 8 | 3500 | 30 | 241 | 7/8-14 | **DE-FCB** | MF38 |
| | 6 | 3500 | 23 | 241 | 3/4-16 | **PB-FCF** | MF40 |
| | 8 | 3500 | 30 | 241 | 7/8-14 | **DE-FCF** | MF42 |
| | 25 | 3500 | 95 | 241 | 1 5/16 -12 | **SJ-FCF** | MF44 |

## TYPICAL SCHEMATIC

Typical application for the FCA, FCB, FCC and FCF is for actuator speed control. The FCB and FCF valves have fixed, non-adjustable settings. The FCA and FCC versions are adjustable.

FCA
FCC

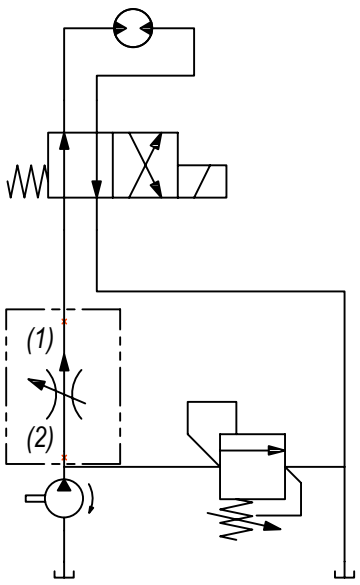


FCB
FCF

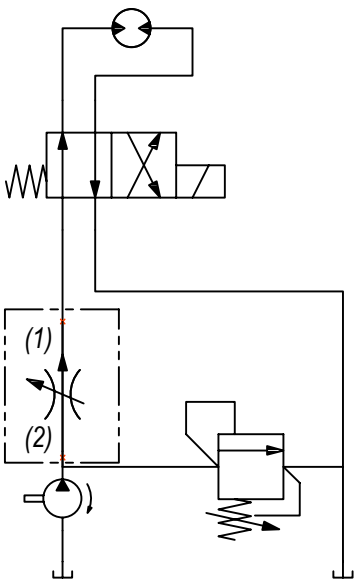


**WARNING:** *the specifications/application data shown in our catalogs and data sheets are intended only as a general guide for the product described (herein). Any specific application should not be undertaken without independent study, evaluation, and testing for suitability.*



Via Malavolti, 36 - 41122 Modena - ITALY - Phone +39 (059) 254895 - Fax +39 (059) 253512 - mail: tecnord@tecnord.com - **www.tecnord.com**

## MA-FCA ADJUSTABLE FLOW CONTROL VALVE, PRESSURE COMPENSATED

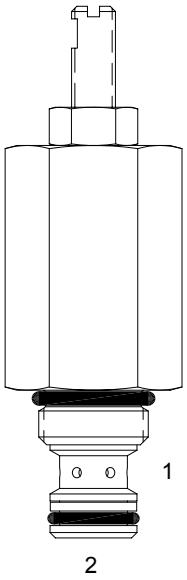


### DESCRIPTION

7 size, 5/8-18 thread, “Mini” series, pressure compensated, flow control valve.

### OPERATION

The cartridge maintains a constant flow rate out of (1) regardless of load pressure changes in the circuit downstream of (1). The adjustable control differential spring load can be set to customer flow specification (see options for ranges). The valve begins to respond to load changes when the flow through the valve creates a pressure differential from (2) to (1) greater than 200 PSI with accurate flow maintenance from 200 to 3000 PSI (14 to 207 bar). Reverse flow (1) to (2) returns through the control orifice and is non-compensated. The regulated flow increases from low to high with clockwise rotation of the knob.

### FEATURES

- Hardened parts for long life.
- Industry common cavity.
- Fine low-torque adjustment.

*Best stability is obtained with adjustment at highest flow.*

### HYDRAULIC SYMBOL

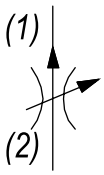


### VALVE SPECIFICATIONS

| | |
|---|---|
| Nominal Flow | 3 GPM (11 LPM) |
| Rated Operating Pressure | 3000 PSI (207 bar) |
| Viscosity Range | 36 to 3000 SSU (3 to 647 cSt) |
| Filtration | ISO 18/16/13 |
| Media Operating Temp. Range | -40° to 250°F (-40° to 120°C) |
| Weight | .29 lbs (.13 kg) |
| Operating Fluid Media | General Purpose Hydraulic Fluid |
| Cartridge Torque Requirements | 15 ft-lbs (20.3 Nm) |
| Cavity | MINI 2W |
| Cavity Form Tool (Finishing) | 40500003 |
| Seal Kit | 21191000 |

### PERFORMANCE

Actual Test Data (Cartridge Only)

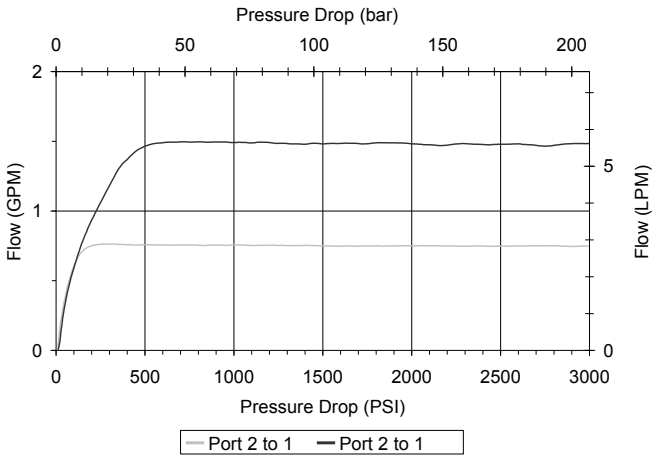


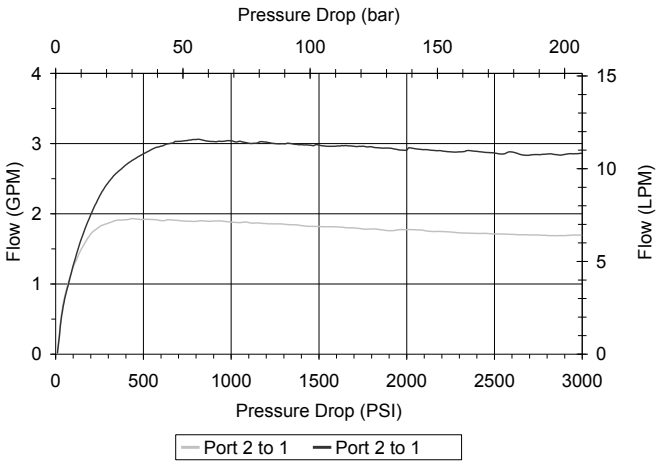


**WARNING:** *the specifications/application data shown in our catalogs and data sheets are intended only as a general guide for the product described (herein). Any specific application should not be undertaken without independent study, evaluation, and testing for suitability.*



Via Malavolti, 36 - 41122 Modena - ITALY - Phone +39 (059) 254895 - Fax +39 (059) 253512 - mail: tecnord@tecnord.com - **www.tecnord.com**

## DIMENSIONS

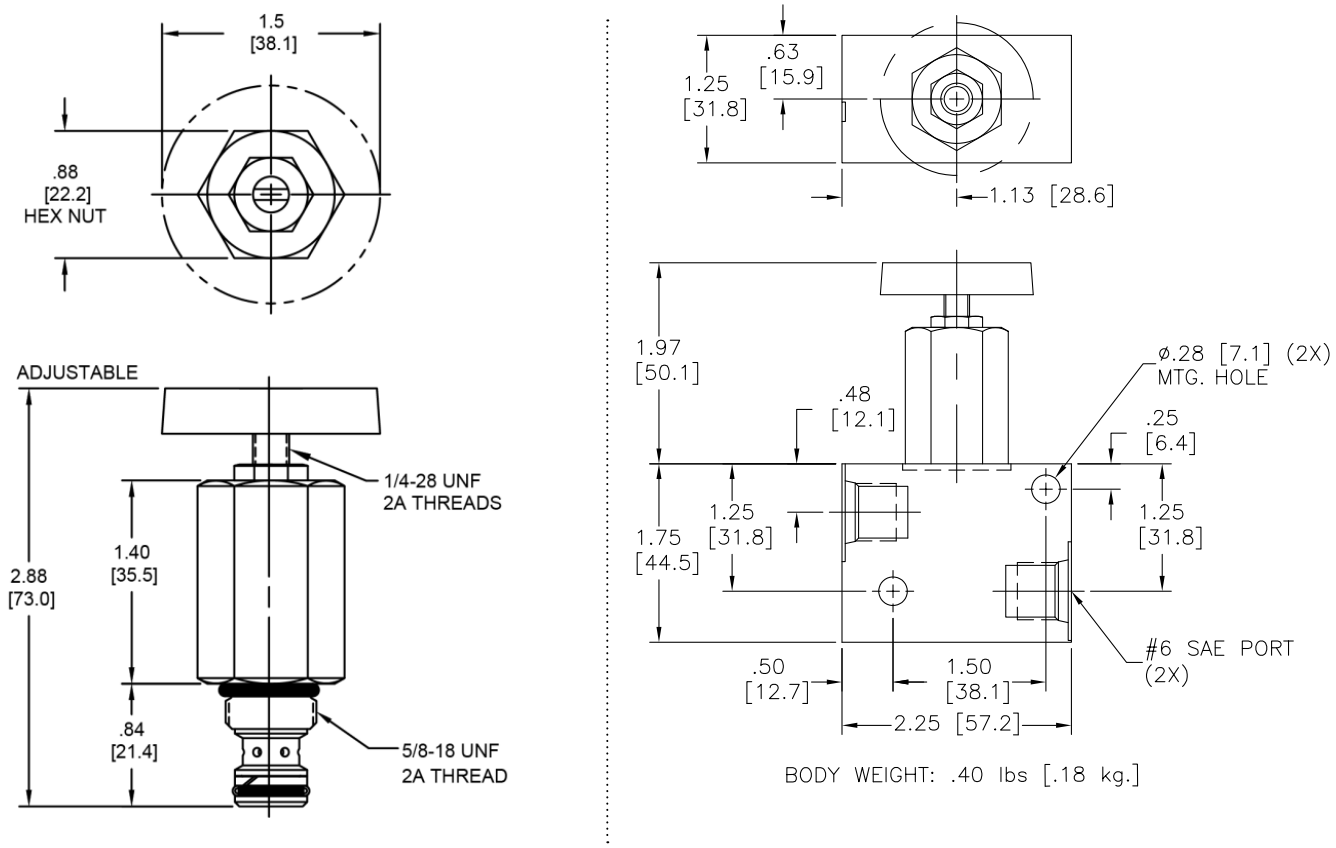


*Body Weight: .29 lbs (.13 kg)*

## ORDERING INFORMATION

**MA-FCA – ____ – ____ – ____**

**OPTIONS**

| | |
|---|---|
| Buna Standard | **00** |
| Viton Standard | **V0** |
| Buna, Knob | **0K** |
| Viton, Knob | **VK** |

**FLOW**

| | |
|---|---|
| **0.17** | .08 - .17 GPM |
| **00.5** | .25 - .5 GPM |
| **00.9** | .5 - .9 GPM |

**BODIES**

| | |
|---|---|
| **Blank** | Without Body |
| **N** | 1/4" NPTF Ports |
| **S** | #6 SAE Ports |

**WARNING:** *the specifications/application data shown in our catalogs and data sheets are intended only as a general guide for the product described (herein). Any specific application should not be undertaken without independent study, evaluation, and testing for suitability.*



Via Malavolti, 36 - 41122 Modena - ITALY - Phone +39 (059) 254895 - Fax +39 (059) 253512 - mail: tecnord@tecnord.com - **www.tecnord.com**

## PB-FCA ADJUSTABLE FLOW CONTROL VALVE, PRESSURE COMPENSATED

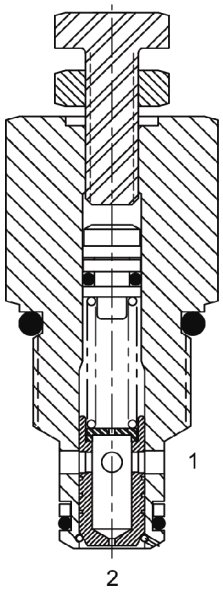


### DESCRIPTION

8 size, 3/4-16 thread, “Power” series, pressure compensated, flow control valve.

### OPERATION

The cartridge maintains a constant flow rate out of (1) regardless of load pressure changes in the circuit downstream of (1). The adjustable control differential spring load can be set to customer flow specification (see options for ranges). The valve begins to respond to load changes when the flow through the valve creates a pressure differential from (2) to (1), greater than 200 PSI (14 bar), with accurate flow maintenance from 200 to 3500 PSI (14 to 241 bar). Reverse flow (1) to (2) returns through the control orifice and is non-compensated. The regulated flow increases from low to high with clockwise rotation of the knob.

### FEATURES

- Hardened parts for long life.
- Industry common cavity.
- Fine low-torque adjustment.

### HYDRAULIC SYMBOL

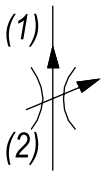


*Best stability is obtained with adjustment at highest flow.*

### PERFORMANCE

Actual Test Data (Cartridge Only)

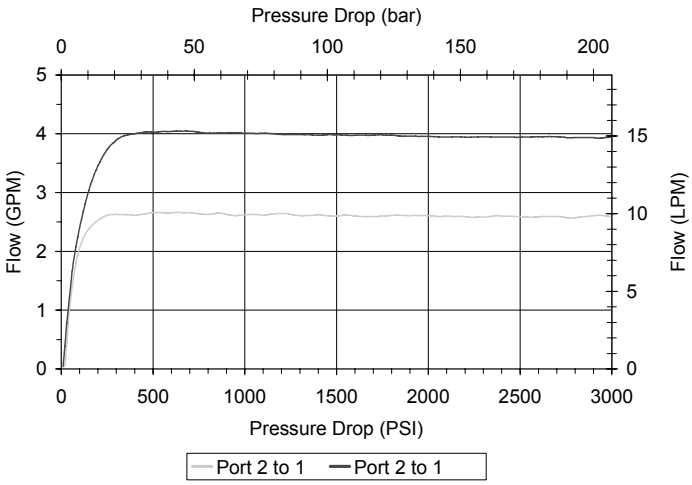


### VALVE SPECIFICATIONS

| | |
|---|---|
| Nominal Flow | 4 GPM (15 LPM) |
| Rated Operating Pressure | 3500 PSI (241 bar) |
| Viscosity Range | 36 to 3000 SSU (3 to 647 cSt) |
| Filtration | ISO 18/16/13 |
| Media Operating Temp. Range | -40° to 250°F (-40° to 120°C) |
| Weight | .26 lbs (.12 kg) |
| Operating Fluid Media | General Purpose Hydraulic Fluid |
| Cartridge Torque Requirements | 25 ft-lbs (34 Nm) |
| Cavity | POWER 2W |
| Cavity Form Tool (Finishing) | 40500005 |
| Seal Kit | 21191100 |

**WARNING:** *the specifications/application data shown in our catalogs and data sheets are intended only as a general guide for the product described (herein). Any specific application should not be undertaken without independent study, evaluation, and testing for suitability.*



Via Malavolti, 36 - 41122 Modena - ITALY - Phone +39 (059) 254895 - Fax +39 (059) 253512 - mail: tecnord@tecnord.com - **www.tecnord.com**

## DIMENSIONS

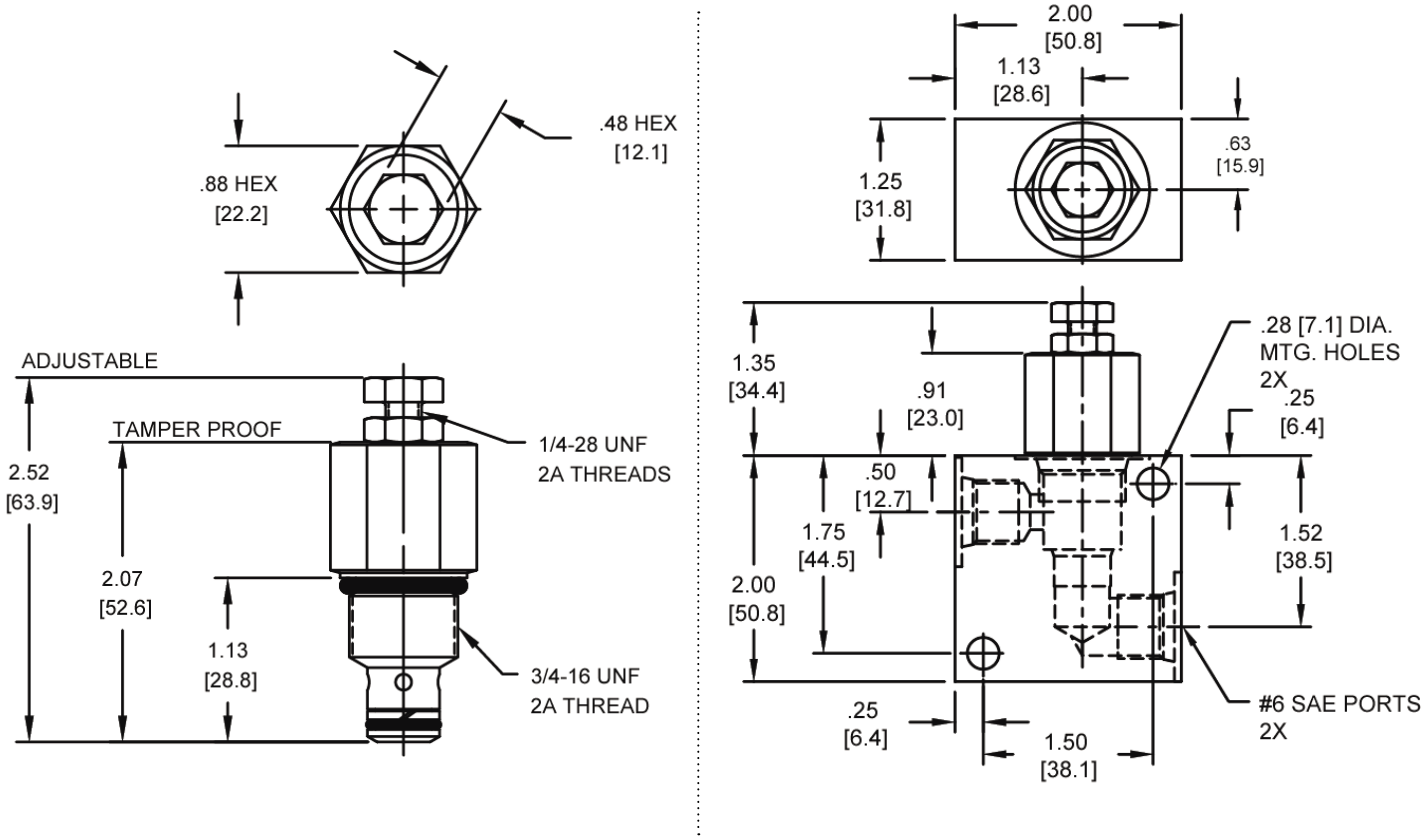


*Body Weight: .39 lbs (.18 kg)*

## ORDERING INFORMATION

**PB-FCA** – ____ – ____ – ____

**OPTIONS**

| | |
|---|---|
| Buna Standard | **00** |
| Viton Standard | **V0** |
| Buna, Tamper Proof | **0T** |
| Viton, Tamper Proof | **VT** |

**FLOW**

| | |
|---|---|
| **0.45** | .25 - .45 GPM |
| **0.75** | .45 - .75 GPM |
| **1.35** | .75 - 1.35 GPM |
| **2.65** | 1.35 - 2.65 GPM |
| **4.00** | 2.65 - 4.00 GPM |

**Tamper Proof**
Fill in Digit Pressure Setting
Example: 02.0 - 2 GPM

**BODIES**

| | |
|---|---|
| **Blank** | Without Body |
| **N** | 1/4" NPTF Ports |
| **S** | #6 SAE Ports |

**WARNING:** *the specifications/application data shown in our catalogs and data sheets are intended only as a general guide for the product described (herein). Any specific application should not be undertaken without independent study, evaluation, and testing for suitability.*



Via Malavolti, 36 - 41122 Modena - ITALY - Phone +39 (059) 254895 - Fax +39 (059) 253512 - mail: tecnord@tecnord.com - **www.tecnord.com**

## DE-FCA ADJUSTABLE FLOW CONTROL VALVE, PRESSURE COMPENSATED

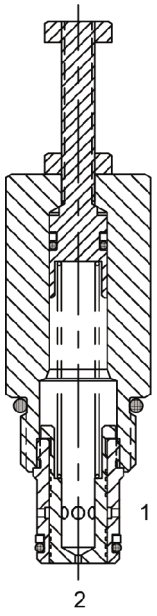


### DESCRIPTION

10 size, 7/8-14 thread, “Delta” series, pressure compensated, flow control valve.

### OPERATION

The DE-FCA maintains a constant flow rate out of (1) regardless of load pressure changes in the circuit downstream of (1). The adjustable control (see options for ranges) differential spring load can be set to customer flow specification. The valve begins to respond to load changes when the flow through the valve creates a pressure differential across the control orifice greater than 100 PSI (6.9 bar), with accurate flow maintenance from 100 to 3500 PSI (6.9 to 241 bar). Reverse flow (1) to (2) returns through the control orifice and is non-compensated. The regulated flow increases from low to high with clockwise rotation of the knob.

### FEATURES

- Hardened parts for long life.
- Industry common cavity.
- Fine low-torque adjustment.

*Best stability is obtained with adjustment at highest flow.*

### HYDRAULIC SYMBOL

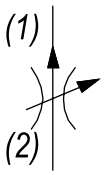


### VALVE SPECIFICATIONS

| | |
|---|---|
| Maximum Flow | 8 GPM (30 LPM) |
| Rated Operating Pressure | 3500 PSI (241 bar) |
| Viscosity Range | 36 to 3000 SSU (3 to 647 cSt) |
| Filtration | ISO 18/16/13 |
| Media Operating Temp. Range | -40° to 250°F (-40° to 120°C) |
| Weight | .49 lbs (.22 kg) |
| Operating Fluid Media | General Purpose Hydraulic Fluid |
| Cartridge Torque Requirements | 30 ft-lbs (40.6 Nm) |
| Cavity | DELTA 2W |
| Cavity Form Tool (Finishing) | 40500000 |
| Seal Kit | 21191200 |

### PERFORMANCE

Actual Test Data (Cartridge Only)

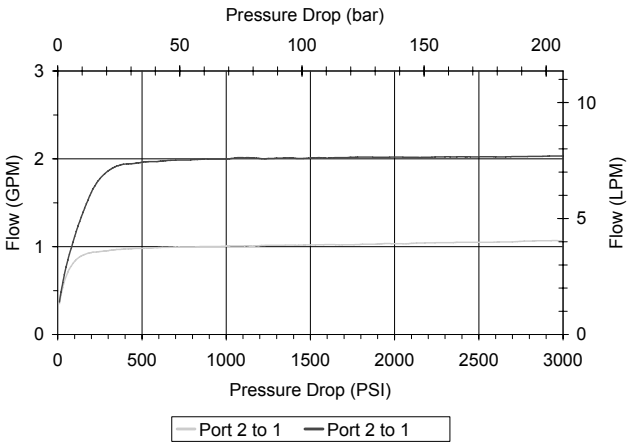


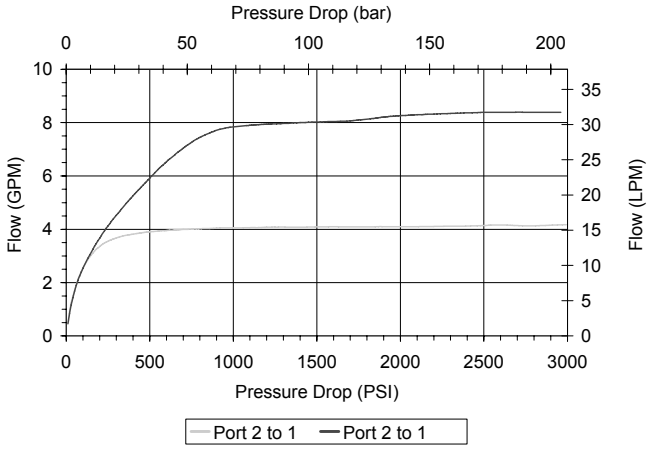


**WARNING:** *the specifications/application data shown in our catalogs and data sheets are intended only as a general guide for the product described (herein). Any specific application should not be undertaken without independent study, evaluation, and testing for suitability.*



Via Malavolti, 36 - 41122 Modena - ITALY - Phone +39 (059) 254895 - Fax +39 (059) 253512 - mail: tecnord@tecnord.com - **www.tecnord.com**

## DIMENSIONS

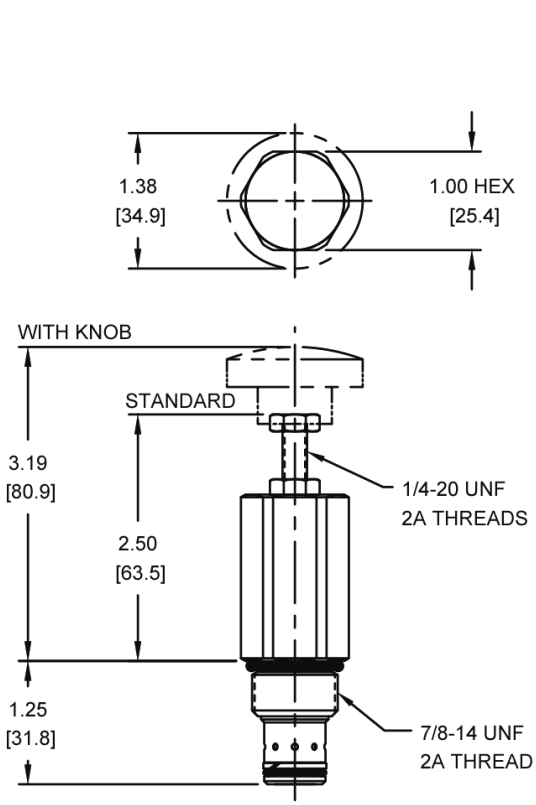


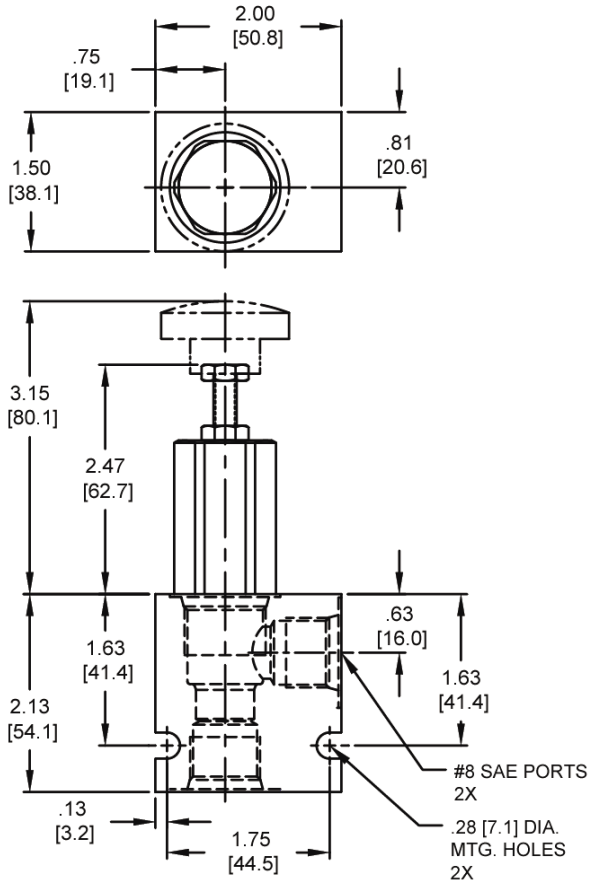


*Body Weight: .47 lbs (.21 kg)*

## ORDERING INFORMATION

**DE-FCA** – ____ – ____ – ____

**OPTIONS**

| | |
|---|---|
| Buna Standard | **00** |
| Viton Standard | **V0** |
| Buna, Knob | **0K** |
| Viton, Knob | **VK** |

**FLOW**

| | |
|---|---|
| **01.0** | .5-1 GPM |
| **02.0** | 1-2 GPM |
| **04.0** | 2-4 GPM |
| **08.0** | 4-8 GPM |

**BODIES**

| | |
|---|---|
| **Blank** | Without Body |
| **N** | 3/8" NPTF Ports |
| **S** | #8 SAE Ports |

**WARNING:** *the specifications/application data shown in our catalogs and data sheets are intended only as a general guide for the product described (herein). Any specific application should not be undertaken without independent study, evaluation, and testing for suitability.*



Via Malavolti, 36 - 41122 Modena - ITALY - Phone +39 (059) 254895 - Fax +39 (059) 253512 - mail: tecnord@tecnord.com - **www.tecnord.com**

## PB-FCC ADJUSTABLE FLOW CONTROL VALVE, PRESSURE COMPENSATED

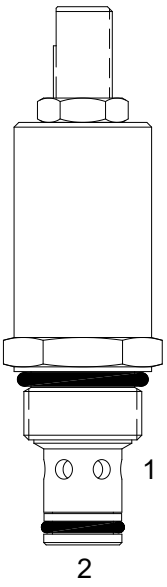


### DESCRIPTION

8 size, 3/4-16 thread, “Power” series, pressure compensated flow control valve.

### OPERATION

The PB-FCC maintains a constant flow rate out of (1) regardless of load pressure changes in the circuit downstream of (1).
The adjustable control differential spring load can be set to customer flow specification (see options for ranges). The valve begins to respond to load changes when the flow through the valve creates a pressure differential from (2) to (1) across the control orifice. Consult graph to see regulation at high and low adjustment settings.
Reverse flow (1) to (2) returns through the control orifice and is non-compensated. The regulated flow increases from low to high with clockwise rotation of the knob.

### FEATURES

- Hardened parts for long life.
- Industry common cavity.

### HYDRAULIC SYMBOL

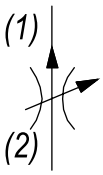


*Best stability is obtained with adjustment at highest flow.*

### PERFORMANCE

Actual Test Data (Cartridge Only)

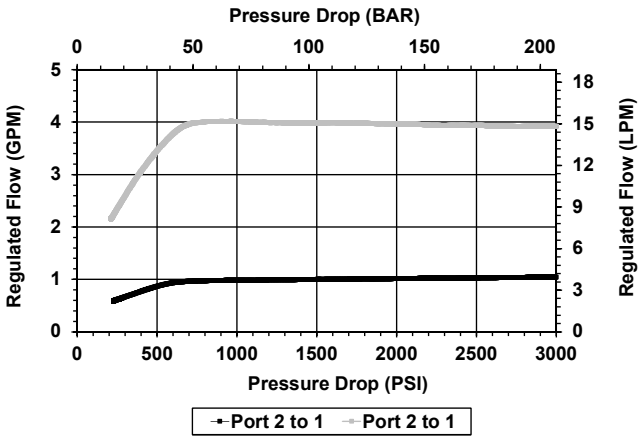


### VALVE SPECIFICATIONS

| | |
|---|---|
| Nominal Flow | 5 GPM (19 LPM) |
| Rated Operating Pressure | 3500 PSI (241 bar) |
| Viscosity Range | 36 to 3000 SSU (3 to 647 cSt) |
| Filtration | ISO 18/16/13 |
| Media Operating Temp. Range | -40° to 250°F (-40° to 120°C) |
| Weight | .26 lbs (.12 kg) |
| Operating Fluid Media | General Purpose Hydraulic Fluid |
| Cartridge Torque Requirements | 25 ft-lbs (34 Nm) |
| Cavity | POWER 2W |
| Cavity Form Tool (Finishing) | 40500005 |
| Seal Kit | 21191100 |

**WARNING:** *the specifications/application data shown in our catalogs and data sheets are intended only as a general guide for the product described (herein). Any specific application should not be undertaken without independent study, evaluation, and testing for suitability.*



Via Malavolti, 36 - 41122 Modena - ITALY - Phone +39 (059) 254895 - Fax +39 (059) 253512 - mail: tecnord@tecnord.com - **www.tecnord.com**

## DIMENSIONS

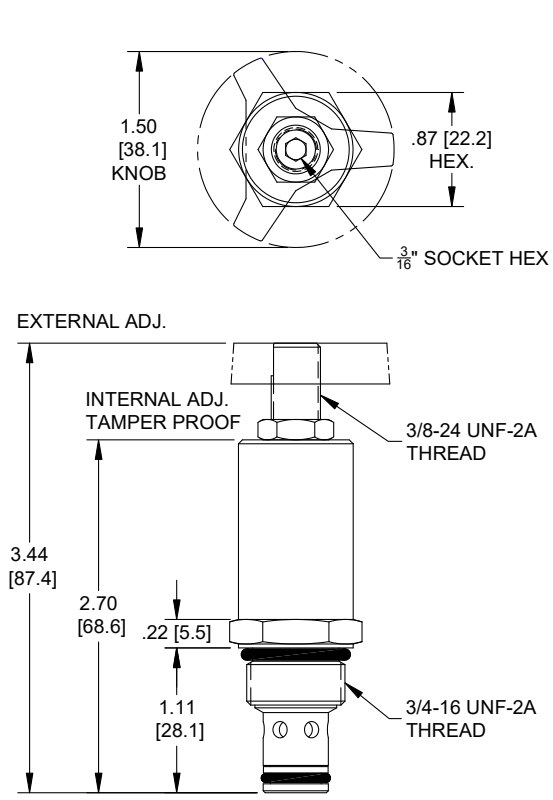


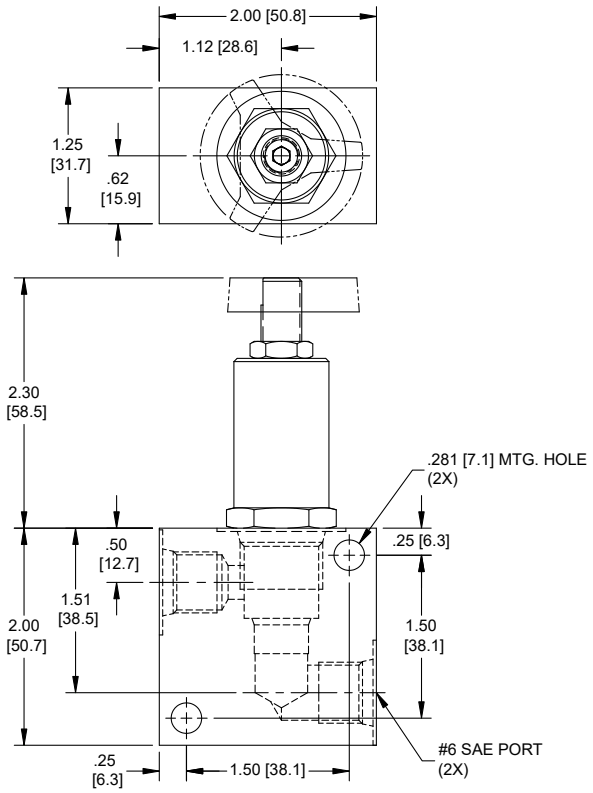


*Body Weight: .39 lbs (.18 kg)*

## ORDERING INFORMATION

**PB-FCC –** ____ **–** ____ **–** ____

**OPTIONS**

| | |
|---|---|
| External Adjust w/Locknut, Buna | **00** |
| External Adjust w/Locknut, Viton | **V0** |
| Knob, Buna | **0K** |
| Knob, Viton | **VK** |
| Internal Adjust, Buna | **0I** |
| Internal Adjust, Viton | **VI** |
| Tamper Proof, Buna | **0T** |
| Tamper Proof, Viton | **VT** |

**FLOW**

| | |
|---|---|
| **0.45** | .25 - .45 GPM |
| **0.75** | .45 - .75 GPM |
| **1.25** | .75 - 1.25 GPM |
| **2.00** | 1.25 - 2.00 GPM |
| **5.00** | 2.00 - 5.00 GPM |

**Tamper Proof**
Fill in 4 Digit Flow Setting
Example: 02.0 - 2 GPM

**BODIES**

| | |
|---|---|
| **Blank** | Without Body |
| **N** | 1/4" NPTF Ports |
| **S** | #6 SAE Ports |

W 50/ 2022

**WARNING:** *the specifications/application data shown in our catalogs and data sheets are intended only as a general guide for the product described (herein). Any specific application should not be undertaken without independent study, evaluation, and testing for suitability.*

## DE-FCC ADJUSTABLE FLOW CONTROL VALVE, PRESSURE COMPENSATED

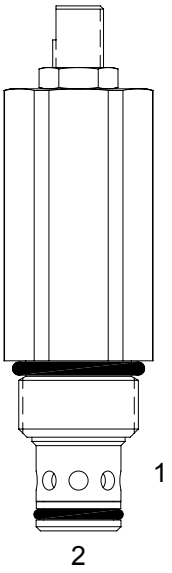


### DESCRIPTION

10 size, 7/8-14 thread, “Delta” series, pressure compensated, flow control valve.

### OPERATION

The DE-FCC maintains a constant flow rate out of (1) regardless of load pressure changes in the circuit downstream of (1). The adjustable control orifice can be set to customer flow specification (see options for ranges). The valve begins to respond to load changes when the flow through the valve creates a pressure differential across the control orifice. Consult chart to see regulation at high and low adjustment settings. Reverse flow (1) to (2) returns through the control orifice and is non-compensated. The regulated flow increases from low to high with clockwise rotation of the knob.

### FEATURES

- Hardened parts for long life.
- Industry common cavity.
- Fine low-torque adjustment.

*Lowest pressure drop is obtained with adjustment at lowest setting.*

### HYDRAULIC SYMBOL

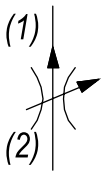


### VALVE SPECIFICATIONS

| | |
|---|---|
| Max Regulated Flow | 11 GPM (41.5 LPM) |
| Rated Operating Pressure | 3500 PSI (241 bar) |
| Viscosity Range | 36 to 3000 SSU (3 to 647 cSt) |
| Filtration | ISO 18/16/13 |
| Media Operating Temp. Range | -40° to 250°F (-40° to 120°C) |
| Weight | .51 lbs (.23 kg) |
| Operating Fluid Media | General Purpose Hydraulic Fluid |
| Cartridge Torque Requirements | 30 ft-lbs (40.6 Nm) |
| Cavity | DELTA 2W |
| Cavity Form Tool (Finishing) | 40500000 |
| Seal Kit | 21191200 |

### PERFORMANCE

Actual Test Data (Cartridge Only)

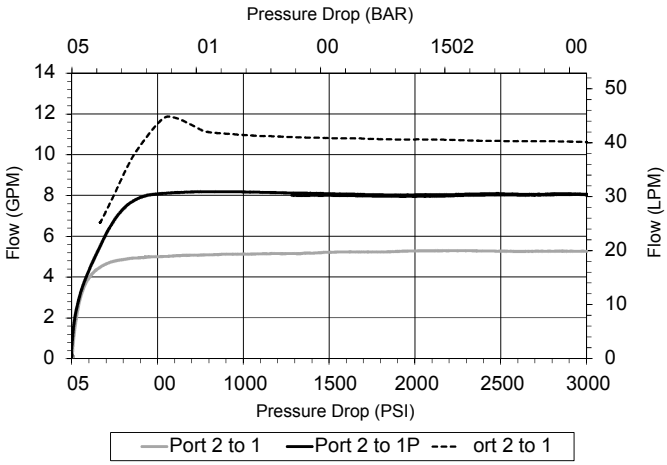


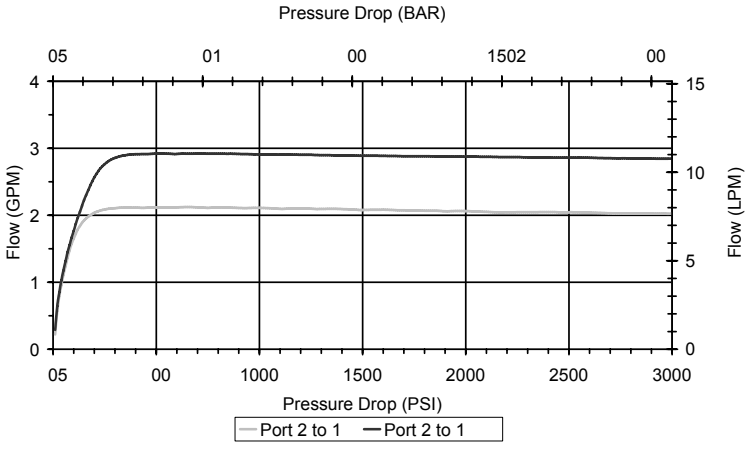


**WARNING:** *the specifications/application data shown in our catalogs and data sheets are intended only as a general guide for the product described (herein). Any specific application should not be undertaken without independent study, evaluation, and testing for suitability.*



Via Malavolti, 36 - 41122 Modena - ITALY - Phone +39 (059) 254895 - Fax +39 (059) 253512 - mail: tecnord@tecnord.com - **www.tecnord.com**

## DIMENSIONS

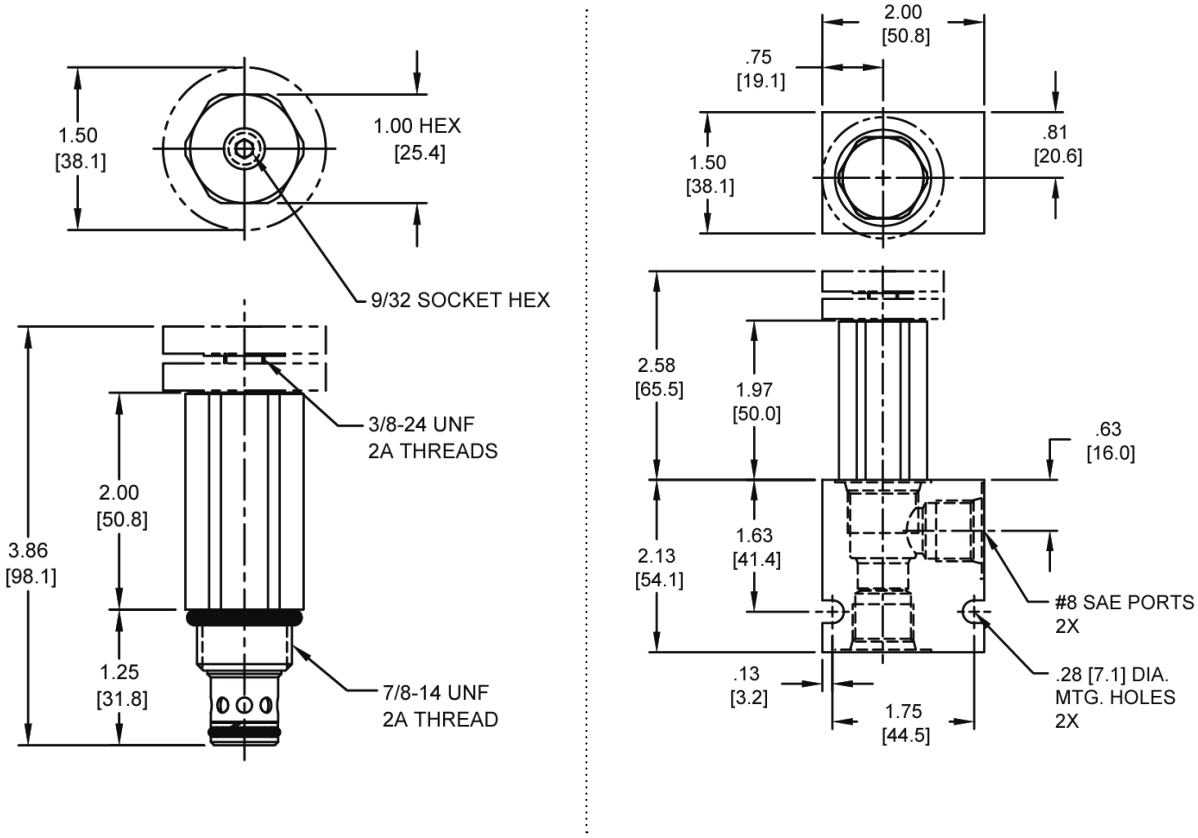


*Body Weight: .47 lbs (.21 kg)*

## ORDERING INFORMATION

**DE-FCC – ____ – ____ – ____**

**OPTIONS**

| | |
|---|---|
| Buna Standard | **00** |
| Viton Standard | **V0** |
| Buna, Knob | **0K** |
| Viton, Knob | **VK** |

**FLOW**

| | |
|---|---|
| **1.16** | 0.80-1.16 GPM |
| **1.62** | 1.16-1.62 GPM |
| **2.09** | 1.62-2.09 GPM |
| **2.90** | 2.09-2.90 GPM |
| **3.80** | 2.90-3.80 GPM |
| **5.00** | 3.80-5.00 GPM |
| **8.00** | 5.00-8.00 GPM |
| **11.0** | 8.00-11.0 GPM |

**FLOW**

Fill In 4 Digit Flow Setting

Example: 4.00 – 4 GPM

**BODIES**

| | |
|---|---|
| **Blank** | Without Body |
| **N** | 3/8" NPTF Ports |
| **S** | #8 SAE Ports |

**WARNING:** *the specifications/application data shown in our catalogs and data sheets are intended only as a general guide for the product described (herein). Any specific application should not be undertaken without independent study, evaluation, and testing for suitability.*

## **DE-FAR** FULLY ADJUSTABLE FLOW CONTROL VALVE, PRESSURE COMPENSATED

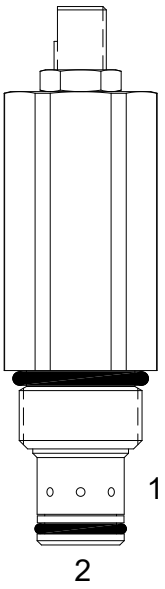


### DESCRIPTION

10 size, 7/8-14 thread, “Delta” series, pressure compensated, fully adjustable flow control valve.

### OPERATION

The DE-FAR maintains a constant flow rate out of (1) regardless of load pressure changes in the circuit downstream of (1). The adjustable control orifice can be set to customer flow specification. The valve begins to respond to load changes when the flow through the valve creates a pressure differential across the control orifice. Consult chart to see regulation at high and low adjustment settings. Reverse flow (1) to (2) returns through the control orifice and is non-compensated. The regulated flow increases from low to high with counterclockwise rotation of the adjustment knob.

### FEATURES

- Hardened parts for long life.
- Industry common cavity.
- Fine low-torque adjustment.

### HYDRAULIC SYMBOL

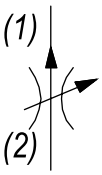


*“Fully Adjustable,” Valve can be adjusted down to leakage flow.*

### PERFORMANCE

Actual Test Data (Cartridge Only)

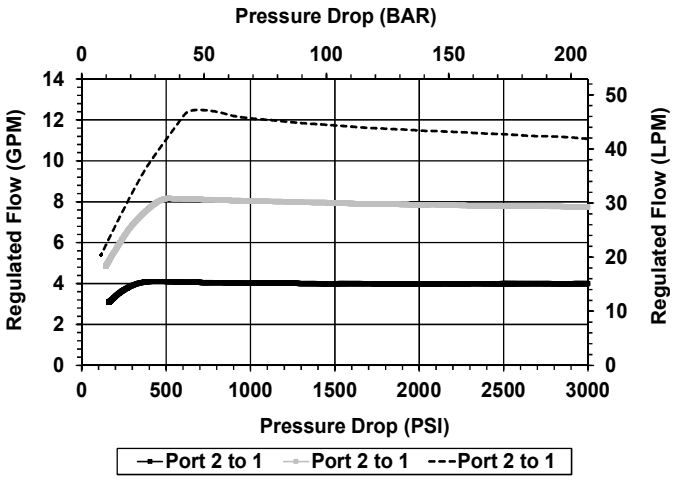


### VALVE SPECIFICATIONS

| | |
|---|---|
| Max Regulated Flow | 12 GPM (45 LPM) |
| Rated Operating Pressure | 3500 PSI (241 bar) |
| Viscosity Range | 36 to 3000 SSU (3 to 647 cSt) |
| Filtration | ISO 18/16/13 |
| Media Operating Temp. Range | -40° to 250°F (-40° to 120°C) |
| Weight | .49 lbs (.22 kg) |
| Operating Fluid Media | General Purpose Hydraulic Fluid |
| Cartridge Torque Requirements | 30 ft-lbs (40.6 Nm) |
| Cavity | DELTA 2W |
| Seal Kit | 21191200 |

**WARNING:** *the specifications/application data shown in our catalogs and data sheets are intended only as a general guide for the product described (herein). Any specific application should not be undertaken without independent study, evaluation, and testing for suitability.*



Via Malavolti, 36 - 41122 Modena - ITALY - Phone +39 (059) 254895 - Fax +39 (059) 253512 - mail: tecnord@tecnord.com - **www.tecnord.com**

## DIMENSIONS

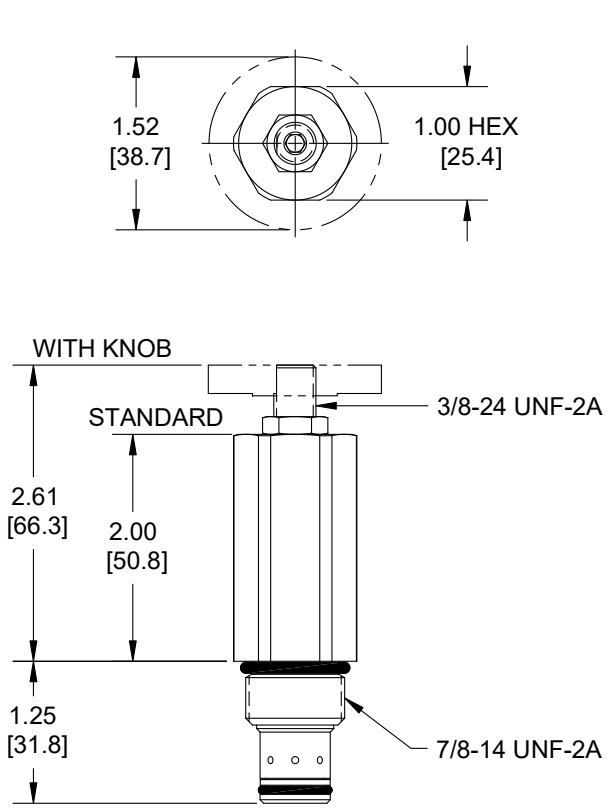


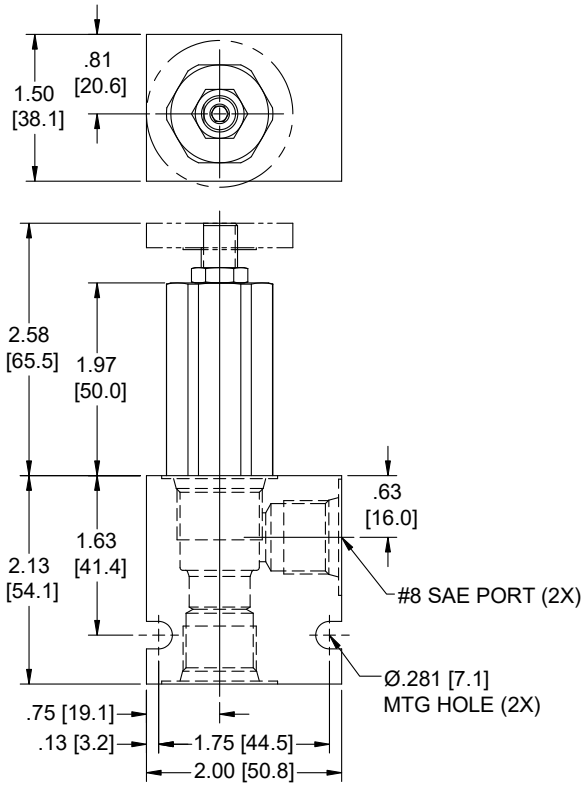


*Body Weight: 47 lbs (.21 kg)*

## ORDERING INFORMATION

**DE-FAR – ____ – ____ – ____**

**OPTIONS**

| | |
|---|---|
| Buna, External Adj. w/locknut | **00** |
| Viton, External Adj. w/locknut | **V0** |
| Buna, Knob | **0K** |
| Viton, Knob | **VK** |

**FLOW SETTING**

**XXXX** 0-12 GPM

**Preset**
Example: 0005 = 5 GPM ±10%

**BODIES**

| | |
|---|---|
| **Blank** | Without Body |
| **N** | 3/8 NPTF Ports |
| **S** | #8 SAE Ports |

**WARNING:** *the specifications/application data shown in our catalogs and data sheets are intended only as a general guide for the product described (herein). Any specific application should not be undertaken without independent study, evaluation, and testing for suitability.*



Via Malavolti, 36 - 41122 Modena - ITALY - Phone +39 (059) 254895 - Fax +39 (059) 253512 - mail: tecnord@tecnord.com - **www.tecnord.com**

## HT-FCA ADJUSTABLE FLOW CONTROL VALVE, PRESSURE COMPENSATED

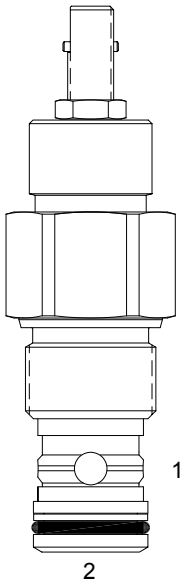


### DESCRIPTION

"High Pressure" 12 size, 1 1/16 -12 thread, "Tecnord" series, pressure compensated, flow control valve.

### OPERATION

The HT-FCA maintains a constant flow rate out of (1) regardless of load pressure changes in the circuit downstream of (1). The adjustable control orifice can be set to customer flow specification (see options for ranges). The valve begins to respond to load changes when the flow through the valve creates a pressure differential across the control orifice. Consult chart to see regulation at high and low adjustment settings. Reverse flow (1) to (2) returns through the control orifice and is non-compensated. The regulated flow increases from low to high with clockwise rotation of the adjustment screw.

### FEATURES

- Hardened parts for long life.
- Industry common cavity.
- Fine low-torque adjustment.

### HYDRAULIC SYMBOL

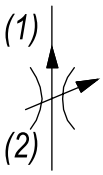


*Valve can adjust down to approximately 1 GPM. Optimum flow regulation performance achieved when pressure differential is between 500 & 2500 PSI from port (2) to (1).*

### PERFORMANCE

Actual Test Data (Cartridge Only)

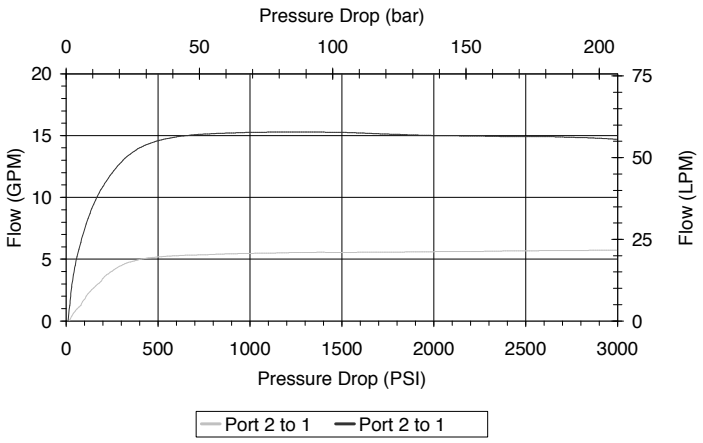


### VALVE SPECIFICATIONS

| | |
|---|---|
| Max Regulated Flow | 18 GPM (68 LPM) |
| Rated Operating Pressure | 5000 PSI (345 bar) |
| Viscosity Range | 36 to 3000 SSU (3 to 647 cSt) |
| Filtration | ISO 18/16/13 |
| Media Operating Temp. Range | -40° to 250°F (-40° to 120°C) |
| Weight | .73 lbs (.33 kg) |
| Operating Fluid Media | General Purpose Hydraulic Fluid |
| Cartridge Torque Requirements | 70 ft-lbs (95 Nm) |
| Cavity | TECNORD 2W |
| Cavity Form Tool (Finishing) | 40500032 |
| Seal Kit | 21191300 |

**WARNING:** *the specifications/application data shown in our catalogs and data sheets are intended only as a general guide for the product described (herein). Any specific application should not be undertaken without independent study, evaluation, and testing for suitability.*



Via Malavolti, 36 - 41122 Modena - ITALY - Phone +39 (059) 254895 - Fax +39 (059) 253512 - mail: tecnord@tecnord.com - **www.tecnord.com**

## DIMENSIONS

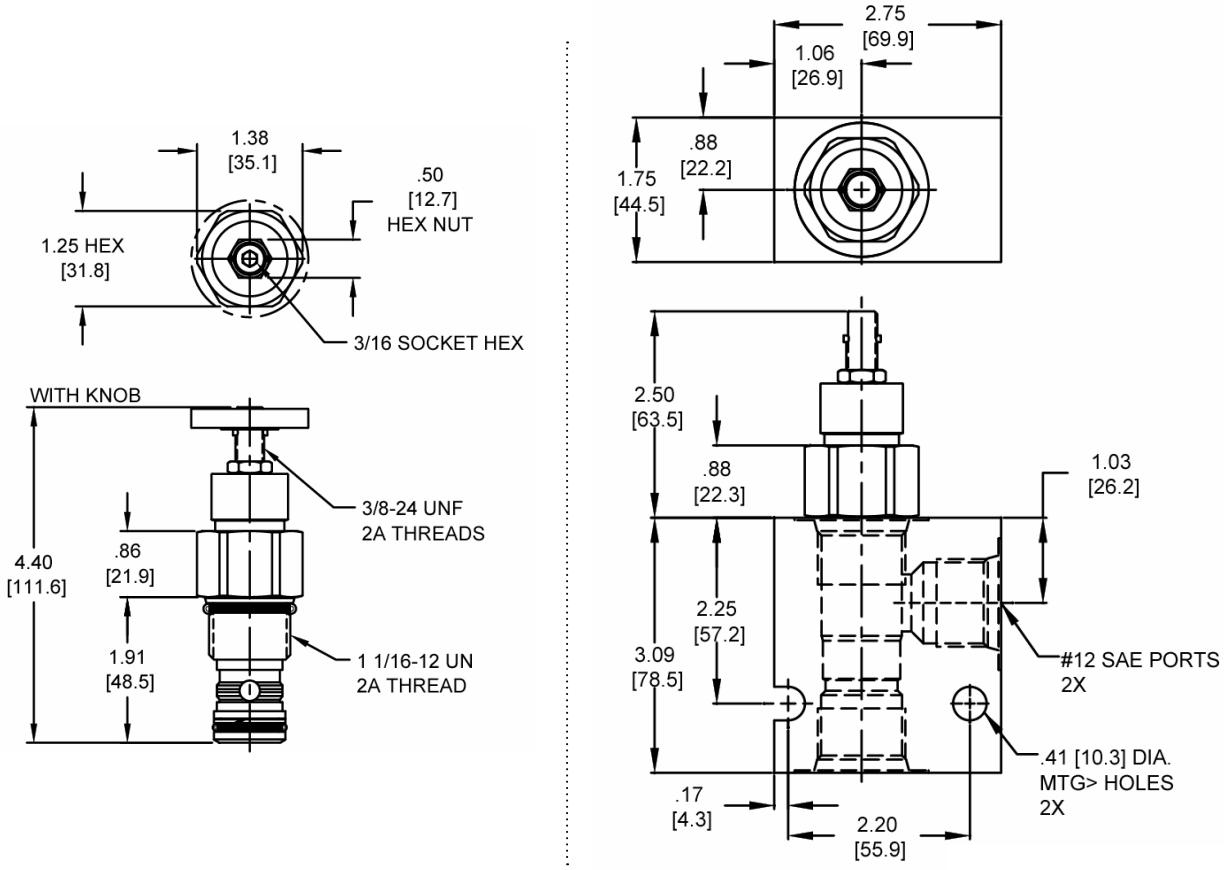


*Body Weight: 3.7 lbs (1.7 kg)*

## ORDERING INFORMATION

**HT-FCA – ____ – ____ – ____**

**OPTIONS**

| | |
|---|---|
| Buna Standard | **00** |
| Viton Standard | **V0** |
| Buna, Knob | **0K** |
| Viton, Knob | **VK** |

**FLOW**

**XXXX** 0-18 GPM

**Preset & Tamper Proof**

Example: 0015 - 15 GPM ±10%

**BODIES**

| | |
|---|---|
| **Blank** | Without Body |
| **S** | #12 SAE Ports |

**Note: aluminum NOT durability rated for 4000 PSI. Consult factory for options.**

**WARNING:** *the specifications/application data shown in our catalogs and data sheets are intended only as a general guide for the product described (herein). Any specific application should not be undertaken without independent study, evaluation, and testing for suitability.*

## SJ-FCA ADJUSTABLE FLOW CONTROL VALVE, PRESSURE COMPENSATED

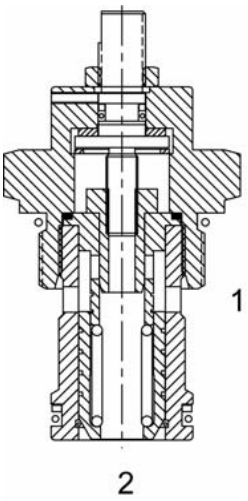


### DESCRIPTION

16 size, 1 5/16 -12 thread, “Super” series, pressure compensated, flow control valve.

### OPERATION

The SJ-FCA maintains a constant flow rate out of (1) regardless of load pressure changes in the circuit downstream of (1). The adjustable control orifice can be set to customer flow specification (see options for ranges). The valve begins to respond to load changes when the flow through the valve creates a pressure differential across the control orifice. Consult chart to see regulation at high and low adjustment settings. Reverse flow (1) to (2) returns through the control orifice and is non-compensated. The regulated flow increases from low to high with clockwise rotation of the adjustment knob.

### FEATURES

- Hardened parts for long life.
- Industry common cavity.
- Fine low-torque adjustment.

### HYDRAULIC SYMBOL

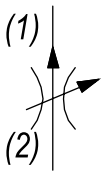


*“Fully Adjustable,” Valve can be adjusted down to leakage flow.*

### PERFORMANCE

Actual Test Data (Cartridge Only)

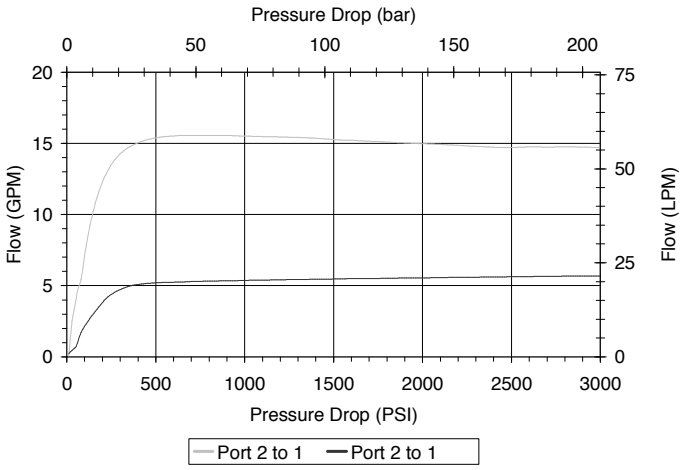


### VALVE SPECIFICATIONS

| | |
|---|---|
| Nominal Flow | 25 GPM (95 LPM) |
| Rated Operating Pressure | 3500 PSI (241 bar) |
| Viscosity Range | 36 to 3000 SSU (3 to 647 cSt) |
| Filtration | ISO 18/16/13 |
| Media Operating Temp. Range | -40° to 250°F (-40° to 120°C) |
| Weight | .89 lbs (.40 kg) |
| Operating Fluid Media | General Purpose Hydraulic Fluid |
| Cartridge Torque Requirements | 90 ft-lbs (122 Nm) |
| Cavity | SUPER 2W |
| Cavity Form Tool (Finishing) | 40500017 |
| Seal Kit | 21191400 |

**WARNING:** *the specifications/application data shown in our catalogs and data sheets are intended only as a general guide for the product described (herein). Any specific application should not be undertaken without independent study, evaluation, and testing for suitability.*



Via Malavolti, 36 - 41122 Modena - ITALY - Phone +39 (059) 254895 - Fax +39 (059) 253512 - mail: tecnord@tecnord.com - **www.tecnord.com**

## DIMENSIONS

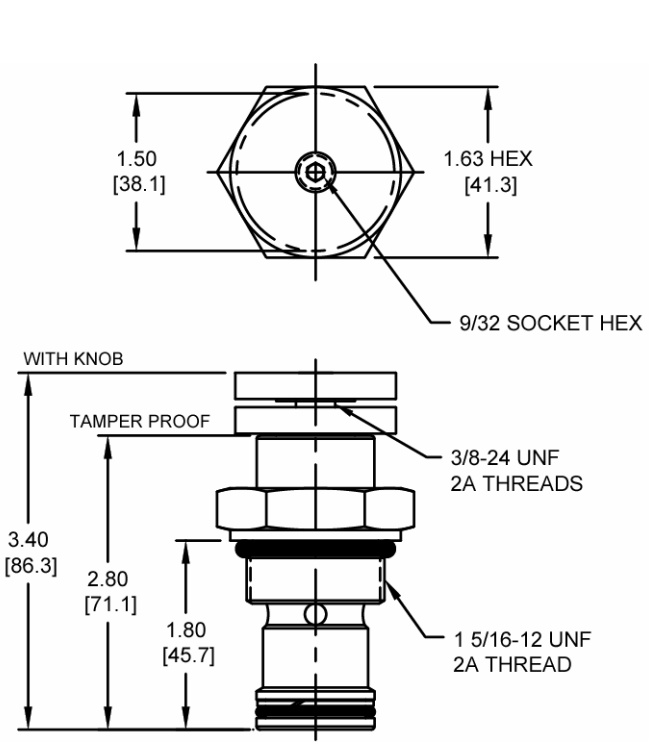


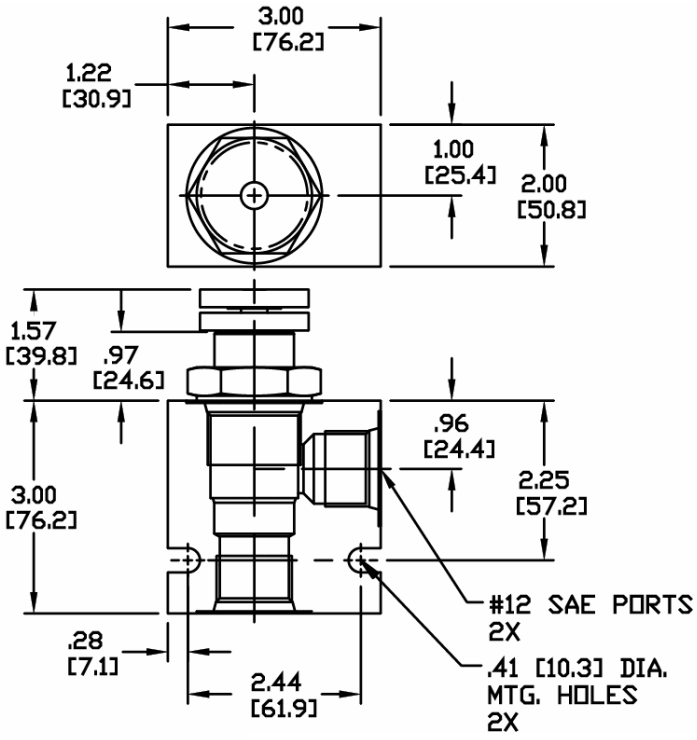


*Body Weight: 1.29 lbs (.59 kg)*

## ORDERING INFORMATION

**SJ-FCA** – _____ – _____ – _____

**OPTIONS**

| | |
|---|---|
| Buna, External Adj. w/locknut | **00** |
| Viton, External Adj. w/locknut | **V0** |
| Buna, Knob | **0K** |
| Viton, Knob | **VK** |
| Buna, Internally Adj. | **0I** |
| Viton, Internally Adj. | **VI** |
| Buna, Tamper Proof | **0T** |
| Viton, Tamper Proof | **VT** |

**FLOW SETTING**

**XXXX** 0-25 GPM

**Preset & Tamper Proof**
Example: 0015 – 15 GPM ±10%

**BODIES**

| | |
|---|---|
| **Blank** | Without Body |
| **N** | 3/4" NPT Ports |
| **S** | #12 SAE Ports |

**WARNING:** *the specifications/application data shown in our catalogs and data sheets are intended only as a general guide for the product described (herein). Any specific application should not be undertaken without independent study, evaluation, and testing for suitability.*

## DE-FCB FIXED FLOW CONTROL VALVE, PRESSURE COMPENSATED

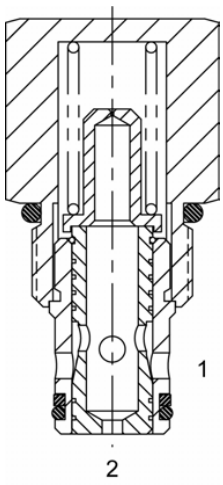


### DESCRIPTION

10 size, 7/8-14 thread, “Delta” series, fixed pressure compensated, flow control valve.

### OPERATION

The DE-FCB maintains a constant flow rate out of (1) regardless of load pressure changes in the circuit downstream of (1). The valve begins to respond to load changes when the flow through the valve creates a pressure differential across the control orifice, in excess of the spring load. Consult chart for regulation performance. Reverse flow (1) to (2) returns through the control orifice and is non-compensated.

### FEATURES

- Hardened parts for long life.
- Industry common cavity.

### HYDRAULIC SYMBOL

*Low pressure drop version for low differential circuits.*

### PERFORMANCE

Actual Test Data (Cartridge Only)

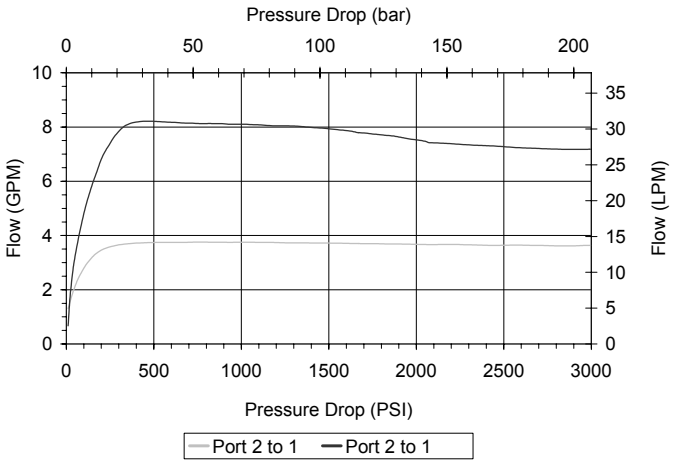


### VALVE SPECIFICATIONS

| | |
|---|---|
| Max Regulated Flow | 8 GPM (30 LPM) |
| Rated Operating Pressure | 3500 PSI (241 bar) |
| Viscosity Range | 36 to 3000 SSU (3 to 647 cSt) |
| Filtration | ISO 18/16/13 |
| Media Operating Temp. Range | -40° to 250°F (-40° to 120°C) |
| Weight | .29 lbs (.13 kg) |
| Operating Fluid Media | General Purpose Hydraulic Fluid |
| Cartridge Torque Requirements | 30 ft-lbs (40.6 Nm) |
| Cavity | DELTA 2W |
| Cavity Form Tool (Finishing) | 40500000 |
| Seal Kit | 21191204 |

**WARNING:** *the specifications/application data shown in our catalogs and data sheets are intended only as a general guide for the product described (herein). Any specific application should not be undertaken without independent study, evaluation, and testing for suitability.*



Via Malavolti, 36 - 41122 Modena - ITALY - Phone +39 (059) 254895 - Fax +39 (059) 253512 - mail: tecnord@tecnord.com - **www.tecnord.com**

## DIMENSIONS

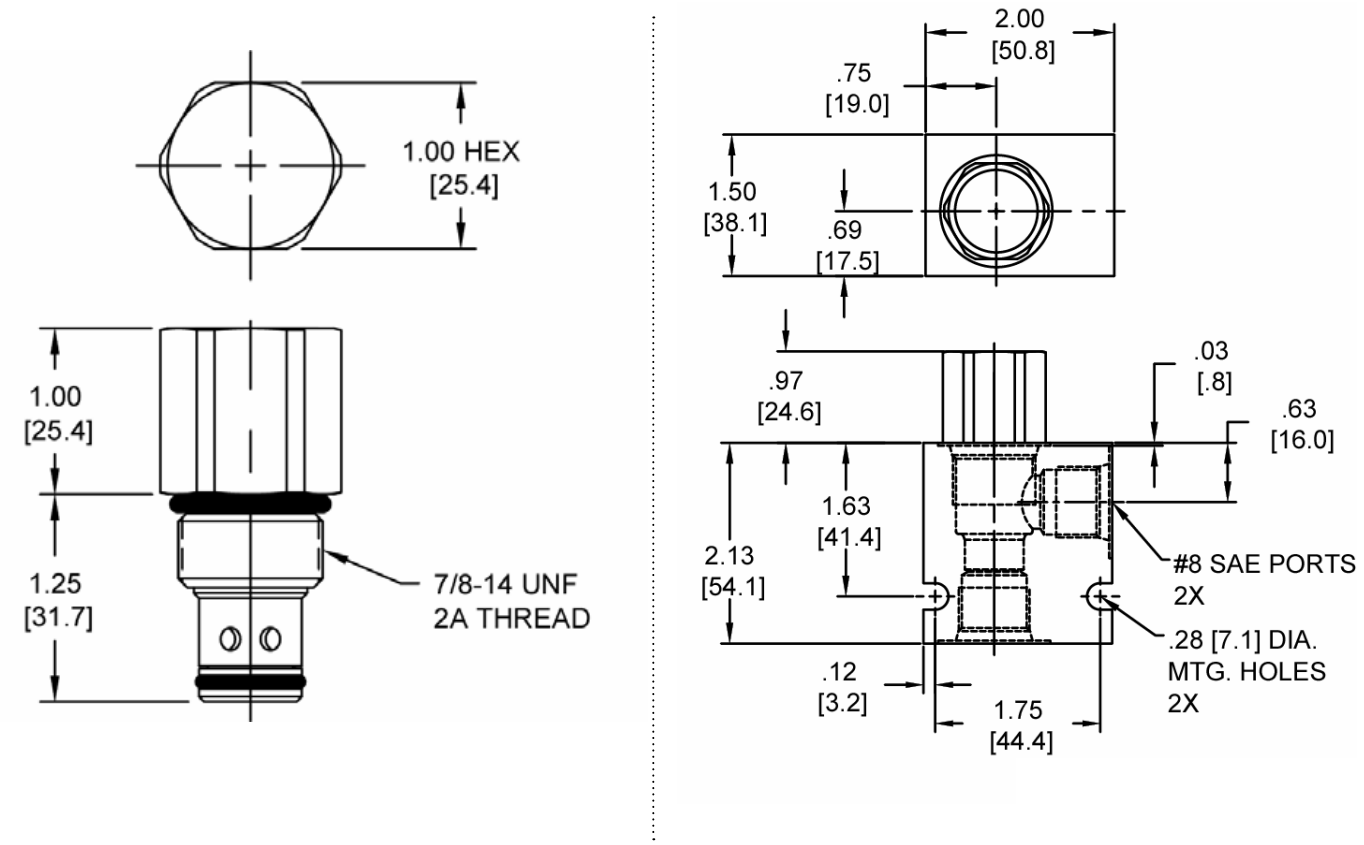


*Body Weight: .47 lbs (.21 kg)*

## ORDERING INFORMATION

**DE-FCB – ____ – ____ – ____**

**OPTIONS**

| | |
|---|---|
| Buna Standard | **00** |
| Viton Standard | **V0** |

**FLOW SETTING**

| | |
|---|---|
| **01.0** | 1 GPM |
| **02.0** | 2 GPM |
| **03.0** | 3 GPM |
| **04.0** | 4 GPM |
| **05.0** | 5 GPM |
| **06.0** | 6 GPM |
| **07.0** | 7 GPM |
| **08.0** | 8 GPM |
| | ± 15% |

**BODIES**

| | |
|---|---|
| **Blank** | Without Body |
| **N** | 3/8" NPT Ports |
| **S** | #8 SAE Ports |

**WARNING:** *the specifications/application data shown in our catalogs and data sheets are intended only as a general guide for the product described (herein). Any specific application should not be undertaken without independent study, evaluation, and testing for suitability.*

## PB-FCF FIXED FLOW CONTROL VALVE, PRESSURE COMPENSATED

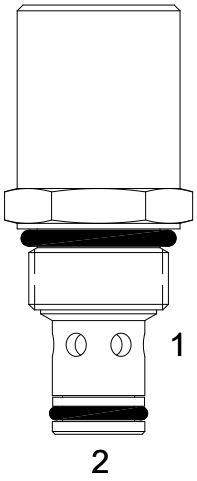


### DESCRIPTION

8 size, 3/4-16 thread, “Power” series, pressure compensated flow control valve.

### OPERATION

The PB-FCF maintains a constant flow rate out of (1) regardless of load pressure changes in the circuit downstream of (1). The valve begins to respond to load changes when the flow through the valve creates a pressure differential across the control orifice, in excess of the spring load. Consult graph for regulation performance.
Reverse flow (1) to (2) returns through the control orifice and is non-compensated.

### FEATURES

- Hardened parts for long life.
- Industry common cavity.

### HYDRAULIC SYMBOL

*Best stability version for high differential circuits.*

### PERFORMANCE

Actual Test Data (Cartridge Only)

### VALVE SPECIFICATIONS

| | |
|---|---|
| Maximum Flow | 6 GPM (23 LPM) |
| Rated Operating Pressure | 3500 PSI (241 bar) |
| Viscosity Range | 36 to 3000 SSU (3 to 647 cSt) |
| Filtration | ISO 18/16/13 |
| Media Operating Temp. Range | -40° to 250°F (-40° to 120°C) |
| Weight | .26 lbs (.12 kg) |
| Operating Fluid Media | General Purpose Hydraulic Fluid |
| Cartridge Torque Requirements | 25 ft-lbs (34 Nm) |
| Cavity | POWER 2W |
| Cavity Form Tool (Finishing) | 40500005 |
| Seal Kit | 21191100 |

**WARNING:** *the specifications/application data shown in our catalogs and data sheets are intended only as a general guide for the product described (herein). Any specific application should not be undertaken without independent study, evaluation, and testing for suitability.*



Via Malavolti, 36 - 41122 Modena - ITALY - Phone +39 (059) 254895 - Fax +39 (059) 253512 - mail: tecnord@tecnord.com - **www.tecnord.com**

## DIMENSIONS

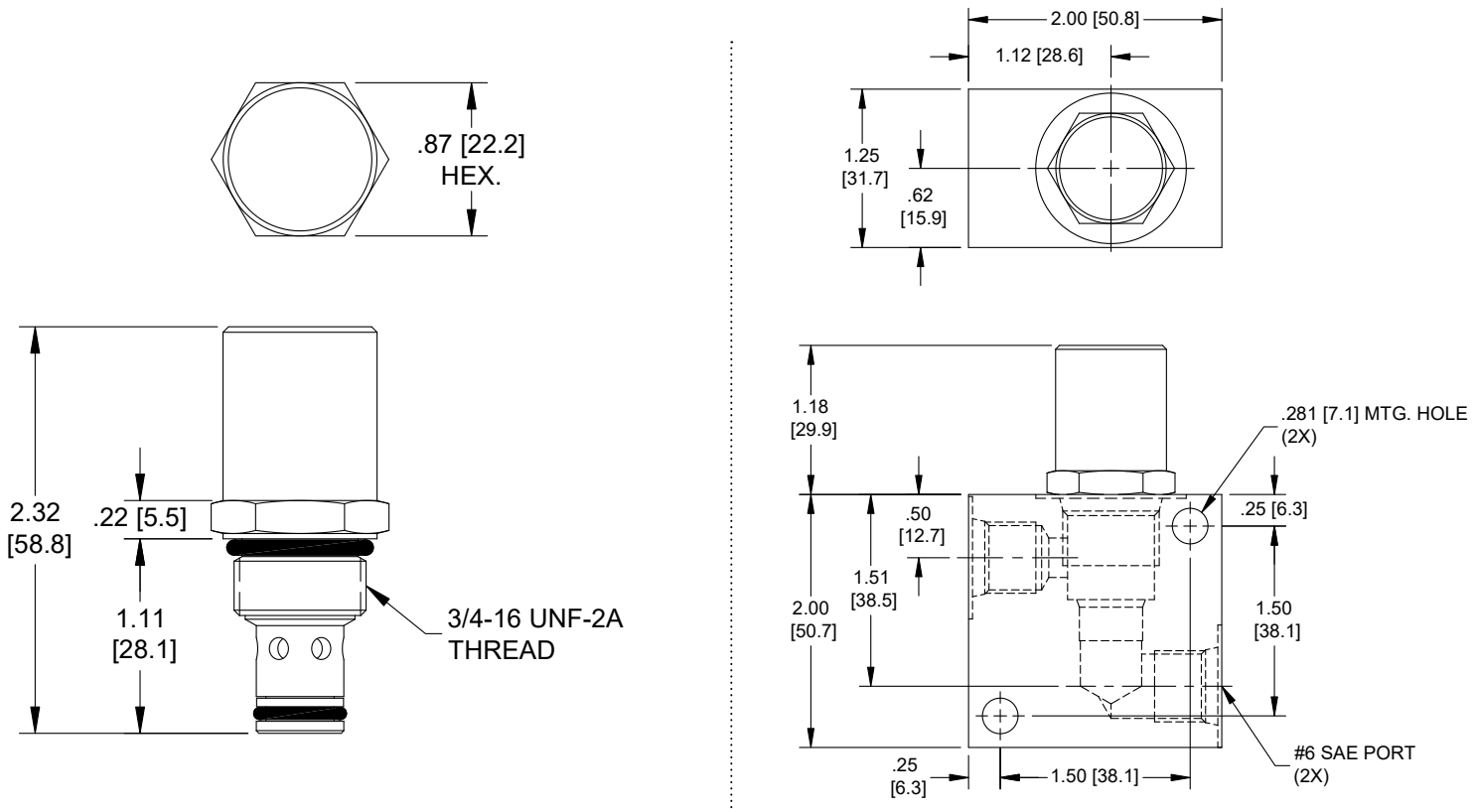


*Body Weight: .39 lbs (.18 kg)*

## ORDERING INFORMATION

**PB-FCF – ____ – ____ – ____**

**OPTIONS**

| | |
|---|---|
| Buna Standard | **00** |
| Viton Standard | **V0** |

**FLOW SETTING**

| | |
|---|---|
| **01.0** | 1 GPM |
| **02.0** | 2 GPM |
| **03.0** | 3 GPM |
| **04.0** | 4 GPM |
| **05.0** | 5 GPM |
| **06.0** | 6 GPM |
| | ± 15% |

**BODIES**

| | |
|---|---|
| **Blank** | Without Body |
| **N** | 1/4 NPTF Ports |
| **S** | #6 SAE Ports |

**WARNING:** *the specifications/application data shown in our catalogs and data sheets are intended only as a general guide for the product described (herein). Any specific application should not be undertaken without independent study, evaluation, and testing for suitability.*



Via Malavolti, 36 - 41122 Modena - ITALY - Phone +39 (059) 254895 - Fax +39 (059) 253512 - mail: tecnord@tecnord.com - **www.tecnord.com**

## DE-FCF FIXED FLOW CONTROL VALVE, PRESSURE COMPENSATED

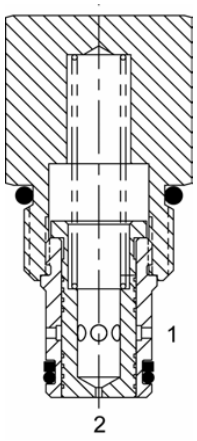


### DESCRIPTION

10 size, 7/8-14 thread, “Delta” series, fixed pressure compensated, flow control valve.

### OPERATION

The DE-FCF maintains a constant flow rate out of (1) regardless of load pressure changes in the circuit downstream of (1). The valve begins to respond to load changes when the flow through the valve creates a pressure differential across the control orifice, in excess of the spring load. Consult chart for regulation performance. Reverse flow (1) to (2) returns through the control orifice and is non-compensated.

### FEATURES

- Hardened parts for long life.
- Industry common cavity.

### HYDRAULIC SYMBOL

*Best stability version for high differential circuits.*

### PERFORMANCE

Actual Test Data (Cartridge Only)

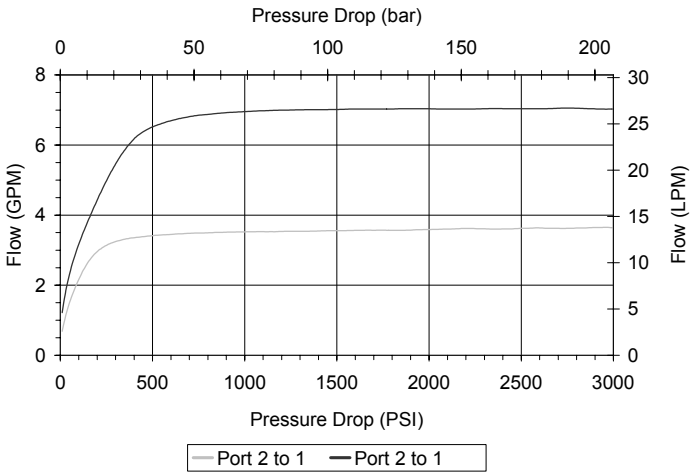


### VALVE SPECIFICATIONS

| | |
|---|---|
| Maximum Flow | 8 GPM (30 LPM) |
| Rated Operating Pressure | 3500 PSI (241 bar) |
| Viscosity Range | 36 to 3000 SSU (3 to 647 cSt) |
| Filtration | ISO 18/16/13 |
| Media Operating Temp. Range | -40° to 250°F (-40° to 120°C) |
| Weight | .32 lbs (.15 kg) |
| Operating Fluid Media | General Purpose Hydraulic Fluid |
| Cartridge Torque Requirements | 30 ft-lbs (40.6 Nm) |
| Cavity | DELTA 2W |
| Cavity Form Tool (Finishing) | 40500000 |
| Seal Kit | 21191204 |

**WARNING:** *the specifications/application data shown in our catalogs and data sheets are intended only as a general guide for the product described (herein). Any specific application should not be undertaken without independent study, evaluation, and testing for suitability.*



Via Malavolti, 36 - 41122 Modena - ITALY - Phone +39 (059) 254895 - Fax +39 (059) 253512 - mail: tecnord@tecnord.com - **www.tecnord.com**

## DIMENSIONS

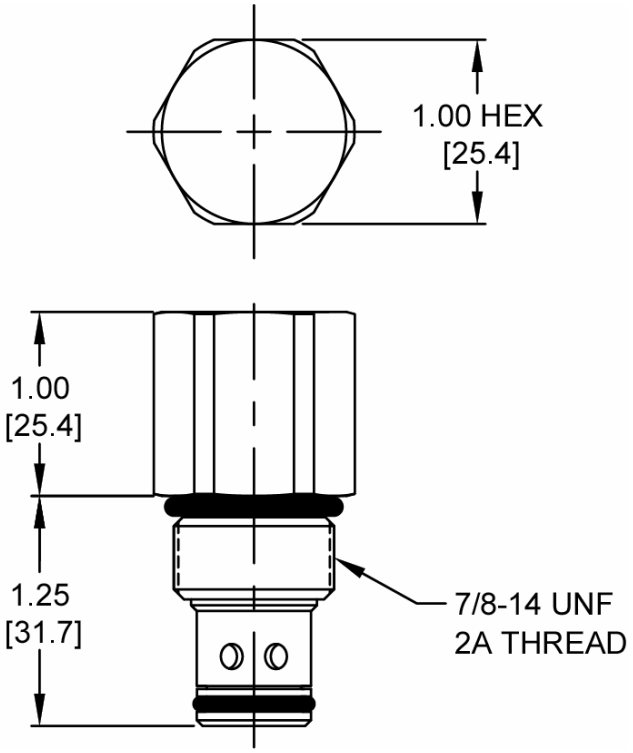


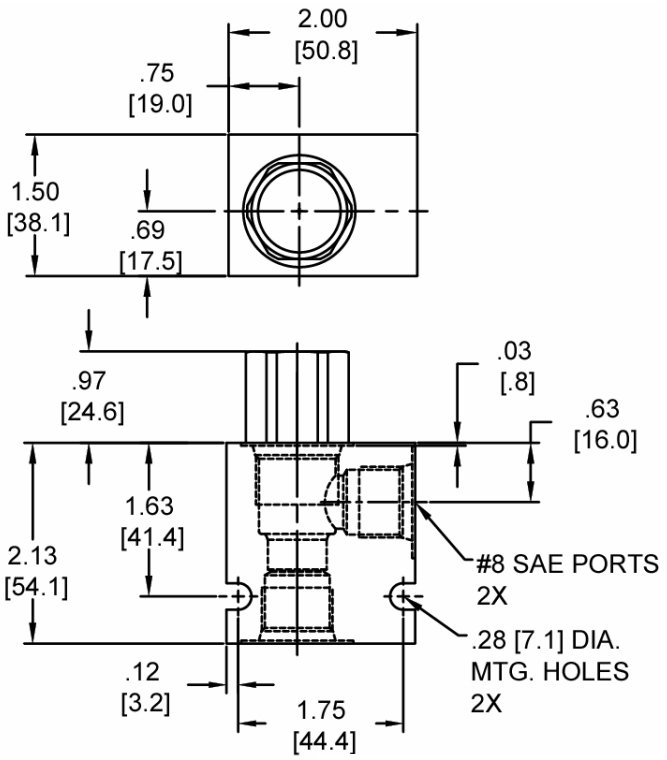


*Body Weight: .47 lbs (.21 kg)*

## ORDERING INFORMATION

**DE-FCF – ____ – ____ – ____**

**OPTIONS**

| | |
|---|---|
| Buna Standard | **00** |
| Viton Standard | **V0** |

**FLOW SETTING**

| | |
|---|---|
| **01.0** | 1 GPM |
| **02.0** | 2 GPM |
| **03.0** | 3 GPM |
| **04.0** | 4 GPM |
| **05.0** | 5 GPM |
| **06.0** | 6 GPM |
| **07.0** | 7 GPM |
| **08.0** | 8 GPM |
| | ± 15% |

**BODIES**

| | |
|---|---|
| **Blank** | Without Body |
| **N** | 3/8" NPT Ports |
| **S** | #8 SAE Ports |

**WARNING:** *the specifications/application data shown in our catalogs and data sheets are intended only as a general guide for the product described (herein). Any specific application should not be undertaken without independent study, evaluation, and testing for suitability.*

## SJ-FCF FIXED FLOW CONTROL VALVE, PRESSURE COMPENSATED

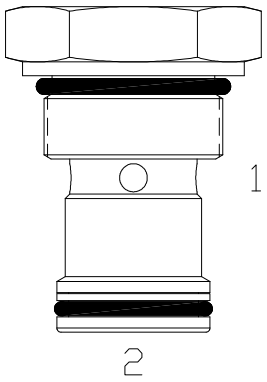


### DESCRIPTION

16 size, 1 5/16-12 thread, “Super” series, fixed pressure compensated, flow control valve.

### OPERATION

The SJ-FCF maintains a constant flow rate out of (1) regardless of load pressure changes in the circuit downstream of (1). The valve begins to respond to load changes when the flow through the valve creates a pressure differential across the control orifice, in excess of the spring load. Consult chart for regulation performance. Reverse flow (1) to (2) returns through the control orifice and is non-compensated.

### FEATURES

- Hardened parts for long life.
- Industry common cavity.

### HYDRAULIC SYMBOL

*For adjustable setting see SJ-FCA.*

### PERFORMANCE

Actual Test Data (Cartridge Only)

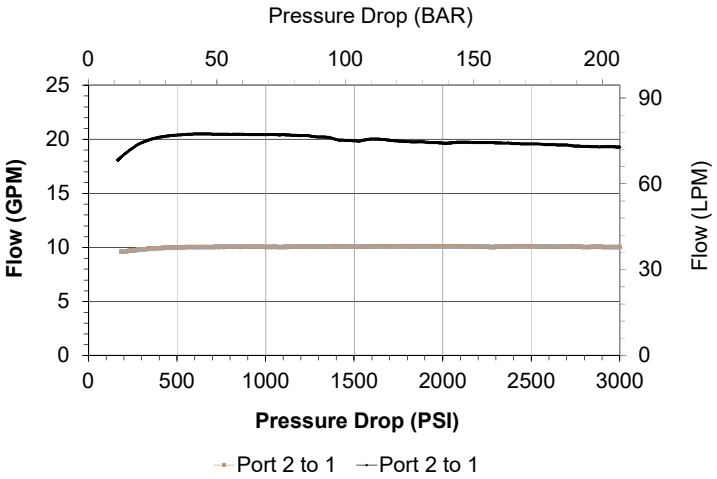


### VALVE SPECIFICATIONS

| | |
|---|---|
| Flow Rate | As specified from 5-25 GPM (19-95 LPM) |
| Rated Operating Pressure | 3500 PSI (241 bar) |
| Viscosity Range | 36 to 3000 SSU (3 to 647 cSt) |
| Filtration | ISO 18/16/13 |
| Media Operating Temp. Range | -40° to 250°F (-40° to 120°C) |
| Weight | .65 lbs (.29 kg) |
| Operating Fluid Media | General Purpose Hydraulic Fluid |
| Cartridge Torque Requirements | 90 ft-lbs (122 Nm) |
| Cavity | SUPER 2W |
| Cavity Form Tool (Finishing) | 40500017 |
| Seal Kit | 21191400 |

**WARNING:** *the specifications/application data shown in our catalogs and data sheets are intended only as a general guide for the product described (herein). Any specific application should not be undertaken without independent study, evaluation, and testing for suitability.*



Via Malavolti, 36 - 41122 Modena - ITALY - Phone +39 (059) 254895 - Fax +39 (059) 253512 - mail: tecnord@tecnord.com - **www.tecnord.com**

## DIMENSIONS

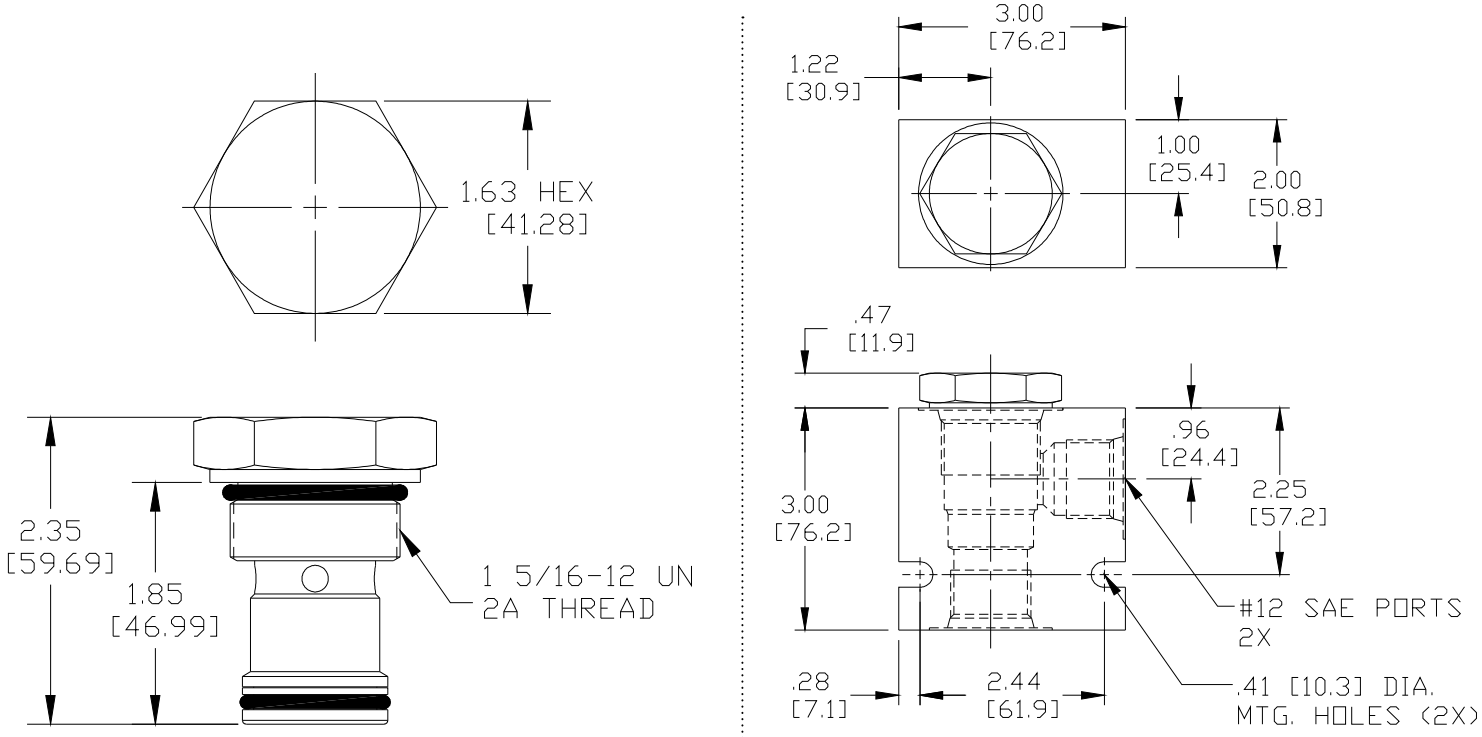


*Body Weight: 1.29 lbs (.59 kg)*

## ORDERING INFORMATION

**SJ-FCF –** _____ **–** _____ **–** _____

**OPTIONS**
Buna Standard **00**
Viton Standard **V0**

**FLOW SETTING**
**0010** 10 GPM
**0025** 25 GPM

**Additional flow settings available upon request**

**BODIES**
**Blank** Without Body
**N** ¾ NPT Ports
**S** #12 SAE Ports

**WARNING:** *the specifications/application data shown in our catalogs and data sheets are intended only as a general guide for the product described (herein). Any specific application should not be undertaken without independent study, evaluation, and testing for suitability.*



Via Malavolti, 36 - 41122 Modena - ITALY - Phone +39 (059) 254895 - Fax +39 (059) 253512 - mail: tecnord@tecnord.com - **www.tecnord.com**

**WARNING:** *the specifications/application data shown in our catalogs and data sheets are intended only as a general guide for the product described (herein). Any specific application should not be undertaken without independent study, evaluation, and testing for suitability.*



Via Malavolti, 36 - 41122 Modena - ITALY - Phone +39 (059) 254895 - Fax +39 (059) 253512 - mail: tecnord@tecnord.com - **www.tecnord.com**

## PRIORITY FLOW REGULATOR VALVES

| | GPM | PSI | LPM | BAR | CAVITY | MODEL | PAGE |
|---|---|---|---|---|---|---|---|
| 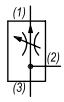 | 5 | 3500 | 19 | 241 | 3/4-16 | **PP-FCQ** | MF48 |
| | 10 | 3000 | 38 | 207 | 7/8-14 | **DF-FCQ** | MF50 |
| | 10 | 3000 | 38 | 207 | 7/8-14 | **DF-FAP** | MF52 |
| | 25 | 3000 | 95 | 207 | 1 5/16-12 | **SK-FCQ** | MF54 |
| 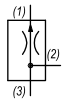 | 5 | 3500 | 19 | 241 | 3/4-16 | **PP-FCP** | MF56 |
| | 10 | 3000 | 38 | 207 | 7/8-14 | **DF-FCP** | MF58 |
| | 25 | 3000 | 95 | 207 | 1 5/16-12 | **SK-FCP** | MF60 |

## LS STEERING PRIORITY

| | GPM | PSI | LPM | BAR | CAVITY | MODEL | PAGE |
|---|---|---|---|---|---|---|---|
| 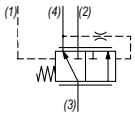 | 9 | 3000 | 34 | 207 | 7/8-14 | **DG-PDS** | MF62 |
| | 20 | 3000 | 76 | 207 | 1 5/16-12 | **SO-PDS** | MF64 |
| 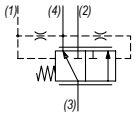 | 9 | 3000 | 34 | 207 | 7/8-14 | **DG-PDD** | MF66 |
| | 20 | 3000 | 76 | 207 | 1 5/16-12 | **SO-PDD** | MF68 |

W 50/ 2022

**WARNING:** *the specifications/application data shown in our catalogs and data sheets are intended only as a general guide for the product described (herein). Any specific application should not be undertaken without independent study, evaluation, and testing for suitability.*

## PP-FCQ ADJUSTABLE PRIORITY FLOW CONTROL VALVE

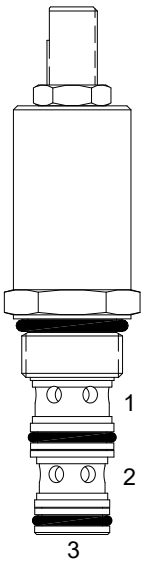


### DESCRIPTION

8 size, 3/4-16 thread, “Power” series, adjustable priority flow control valve.

### OPERATION

The PP-FCQ allows pressure compensated flow from (3) to (1) regulated by the pressure present at (3). Excess flow bypasses out (2).

### FEATURES

- Hardened parts for long life.
- Industry common cavity.

### HYDRAULIC SYMBOL

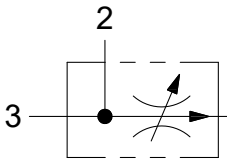


*Test data shown on this sheet, for condition of port (2) to tank. Data on next page, for condition of port (3) to tank.*

### PERFORMANCE

Actual Test Data (Cartridge Only)

### VALVE SPECIFICATIONS

| | |
|---|---|
| Nominal Flow | 5 GPM (19 LPM) |
| Rated Operating Pressure | 3500 PSI (241 bar) |
| Viscosity Range | 36 to 3000 SSU (3 to 647 cSt) |
| Filtration | ISO 18/16/13 |
| Media Operating Temp. Range | -40° to 250°F (-40° to 120°C) |
| Weight | .56 lbs (.25 kg) |
| Operating Fluid Media | General Purpose Hydraulic Fluid |
| Cartridge Torque Requirements | 25 ft-lbs (33.8 Nm) |
| Cavity | POWER 3W |
| Cavity Form Tool (Finishing) | 40500024 |
| Seal Kit | 21191106 |

**WARNING:** *the specifications/application data shown in our catalogs and data sheets are intended only as a general guide for the product described (herein). Any specific application should not be undertaken without independent study, evaluation, and testing for suitability.*



Via Malavolti, 36 - 41122 Modena - ITALY - Phone +39 (059) 254895 - Fax +39 (059) 253512 - mail: tecnord@tecnord.com - **www.tecnord.com**

## DIMENSIONS

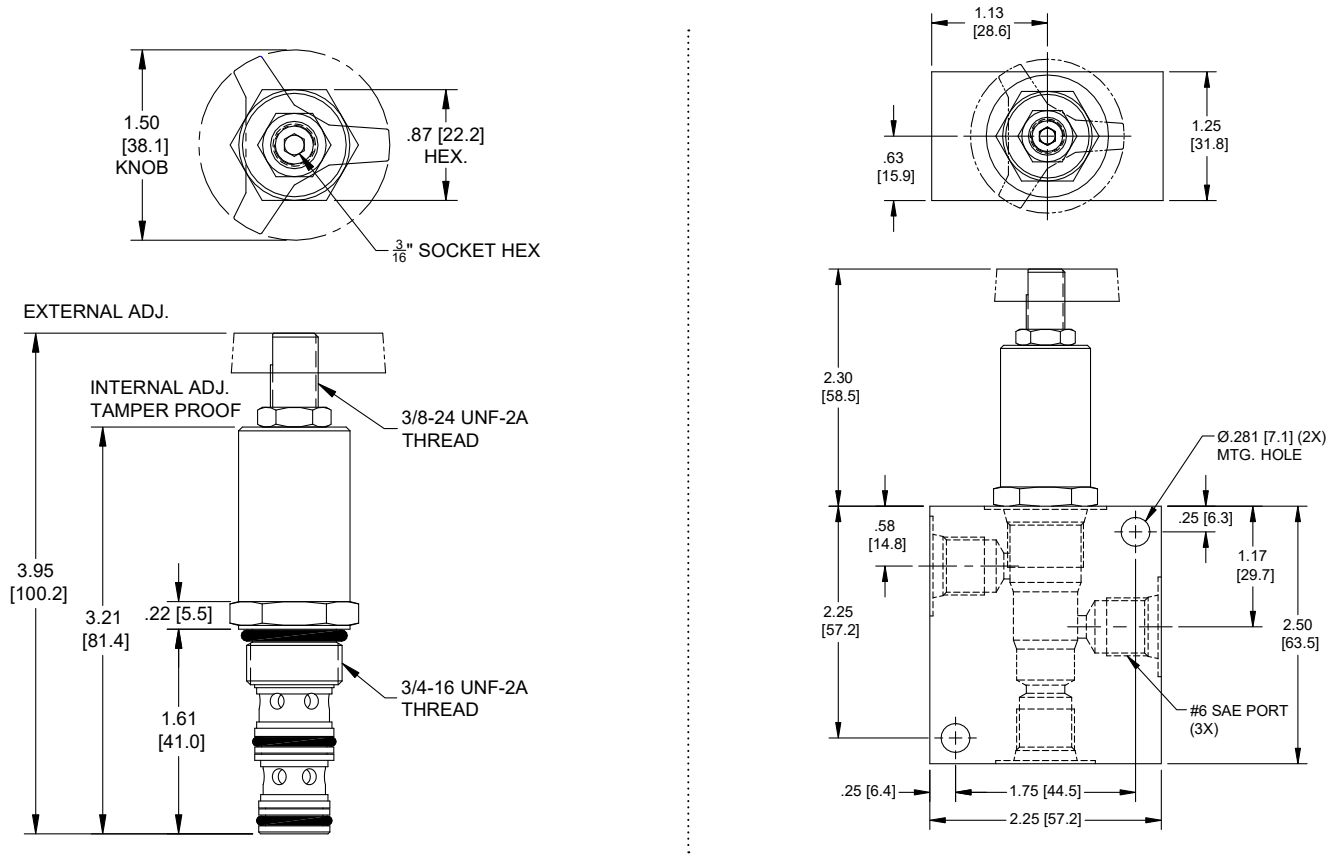


*Body Weight: .56 lbs (.25 kg)*

## ORDERING INFORMATION

**PP-FCQ – ____ – ____ – ____**

**OPTIONS**

| | |
|---|---|
| External Adjust w/Locknut, Buna | **00** |
| External Adjust w/Locknut, Viton | **V0** |
| Knob, Buna | **0K** |
| Knob, Viton | **VK** |
| Internal Adjust, Buna | **0I** |
| Internal Adjust, Viton | **VI** |
| Tamper Proof, Buna | **0T** |
| Tamper Proof, Viton | **VT** |

**FLOW**

| | |
|---|---|
| **0.50** | .25 - .50 GPM |
| **0.75** | .50 - .75 GPM |
| **1.25** | .75 - 1.25 GPM |
| **2.50** | 1.25 - 2.50 GPM |
| **5.00** | 2.50 - 5.00 GPM |

**Tamper Proof**
Fill in 4 Digit Flow Setting
Example: 01.0 - 1.0 GPM

**BODIES**

| | |
|---|---|
| **Blank** | Without Body |
| **N** | 1/4" NPTF Ports |
| **S** | #6 SAE Ports |

**WARNING:** *the specifications/application data shown in our catalogs and data sheets are intended only as a general guide for the product described (herein). Any specific application should not be undertaken without independent study, evaluation, and testing for suitability.*

## DF-FCQ ADJUSTABLE PRIORITY FLOW CONTROL VALVE

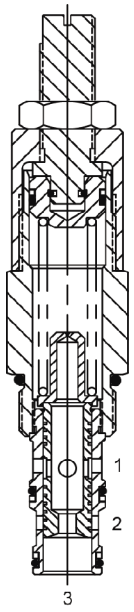


### DESCRIPTION

10 size, 7/8-14 thread, “Delta” series, adjustable priority flow control valve.

### OPERATION

The DF-FCQ allows pressure compensated flow from (3) to (1) regulated by the pressure present at (3). Excess flow bypasses out (2).

### FEATURES

- Hardened parts for long life.
- Industry common cavity.

*Test data shown on this sheet, for condition of port (2) to tank. Data on next page, for condition of port (3) to tank.*

### HYDRAULIC SYMBOL

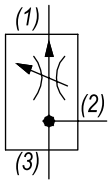


### VALVE SPECIFICATIONS

| | |
|---|---|
| Nominal Flow | 10 GPM (38 LPM) |
| Rated Operating Pressure | 3000 PSI (207 bar) |
| Viscosity Range | 36 to 3000 SSU (3 to 647 cSt) |
| Filtration | ISO 18/16/13 |
| Media Operating Temp. Range | -40° to 250°F (-40° to 120°C) |
| Weight | .56 lbs (.25 kg) |
| Operating Fluid Media | General Purpose Hydraulic Fluid |
| Cartridge Torque Requirements | 30 ft-lbs (40.6 Nm) |
| Cavity | DELTA 3W |
| Cavity Form Tool (Finishing) | 40500001 |
| Seal Kit | 21191206 |

### PERFORMANCE

Actual Test Data (Cartridge Only)

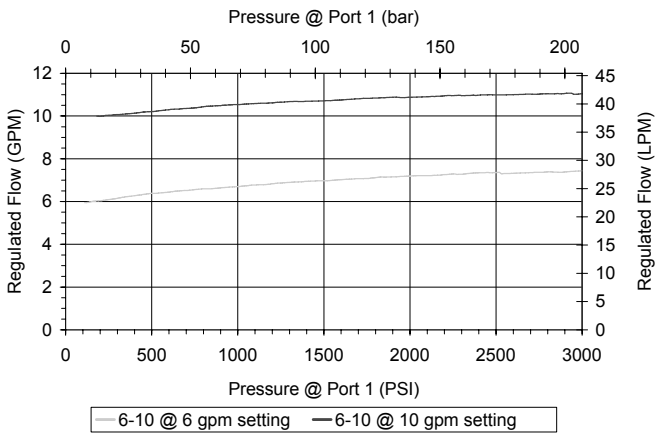


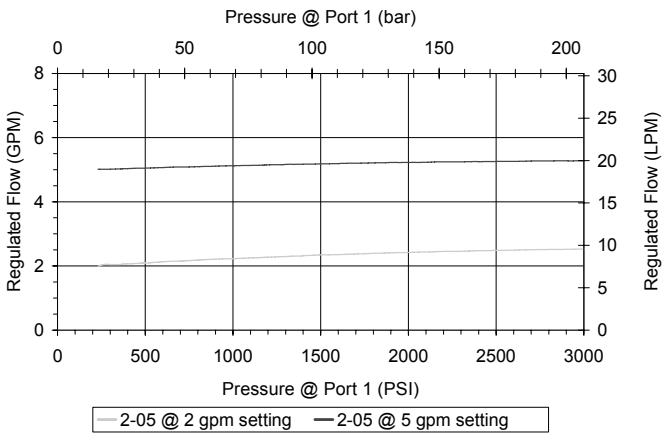


**WARNING:** *the specifications/application data shown in our catalogs and data sheets are intended only as a general guide for the product described (herein). Any specific application should not be undertaken without independent study, evaluation, and testing for suitability.*



Via Malavolti, 36 - 41122 Modena - ITALY - Phone +39 (059) 254895 - Fax +39 (059) 253512 - mail: tecnord@tecnord.com - **www.tecnord.com**

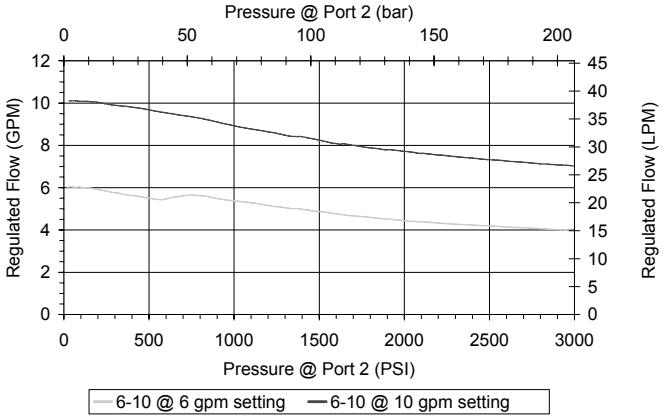


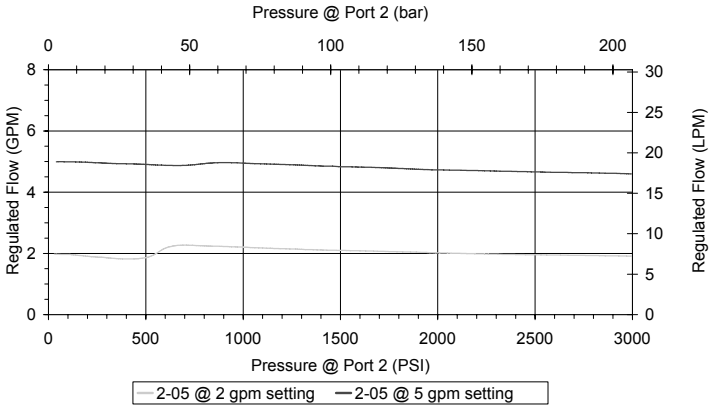


## DIMENSIONS

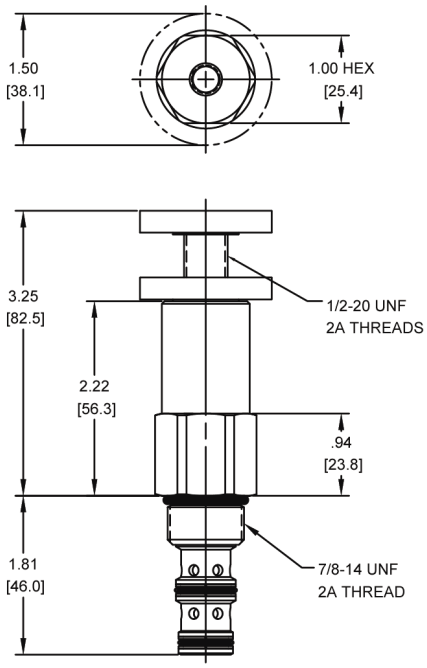


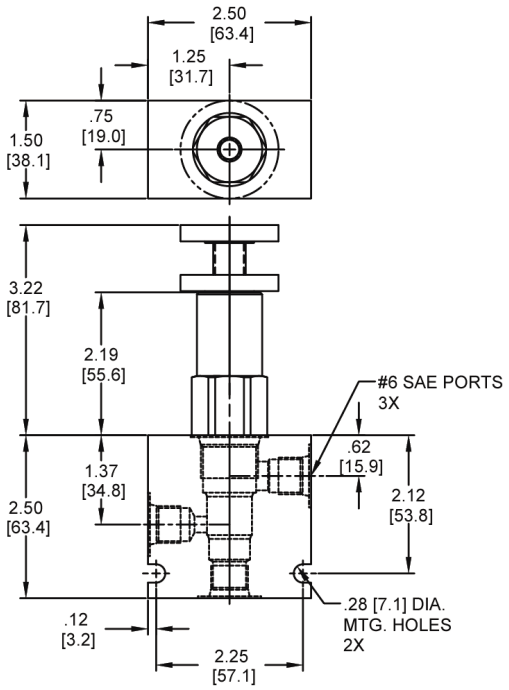


*Body Weight: .76 lbs (.35 kg)*

## ORDERING INFORMATION

**DF-FCQ – ____ – ____ – ____**

**OPTIONS**

| | |
|---|---|
| Buna Standard | **00** |
| Viton Standard | **V0** |
| Buna, Knob | **0K** |
| Viton, Knob | **VK** |

**FLOW RANGE**

| | |
|---|---|
| **2-05** | 2 to 5 GPM |
| **6-10** | 6 to 10 GPM |

**BODIES**

| | |
|---|---|
| **Blank** | Without Body |
| **N** | 1/4" NPTF Ports |
| **S** | #6 SAE Ports |

**WARNING:** *the specifications/application data shown in our catalogs and data sheets are intended only as a general guide for the product described (herein). Any specific application should not be undertaken without independent study, evaluation, and testing for suitability.*



Via Malavolti, 36 - 41122 Modena - ITALY - Phone +39 (059) 254895 - Fax +39 (059) 253512 - mail: tecnord@tecnord.com - **www.tecnord.com**

## DF-FAP FULLY ADJUSTABLE PRIORITY FLOW CONTROL VALVE WITH BYPASS

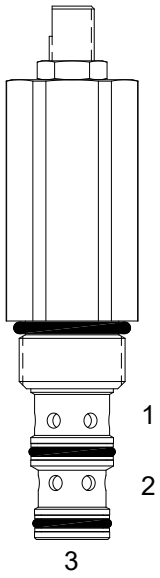


### DESCRIPTION

10 size, 7/8-14 thread, “Delta” series, fully adjustable priority flow control valve with bypass.

### OPERATION

The DF-FAP allows pressure compensated flow from (3) to (1), regulated by the pressure present at (3). Excess flow bypasses out (2). Can be used as a restrictive pressure compensated flow control when the bypass port (2) is blocked.

### FEATURES

- Hardened cage and spool for long life.
- Industry common cavity.

*When used as a bypass flow control in applications where the priority flow port will be blocked by external valving, bypass pressure drop will increase unless a small amount of leakage is provided for the priority port. Consult factory.*

### HYDRAULIC SYMBOL

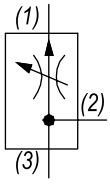


### VALVE SPECIFICATIONS

| | |
|---|---|
| Max Regulated Flow | 10 GPM (38 LPM) |
| Rated Operating Pressure | 3000 PSI (207 bar) |
| Viscosity Range | 36 to 3000 SSU (3 to 647 cSt) |
| Filtration | ISO 18/16/13 |
| Media Operating Temp. Range | -40° to 250°F (-40° to 120°C) |
| Weight | .40 lbs (.18 kg) |
| Operating Fluid Media | General Purpose Hydraulic Fluid |
| Cartridge Torque Requirements | 30 ft-lbs (40.6 Nm) |
| Cavity | DELTA 3W |
| Cavity Form Tool (Finishing) | 40500001 |
| Seal Kit | 21191210 |

### PERFORMANCE

Actual Test Data (Cartridge Only)

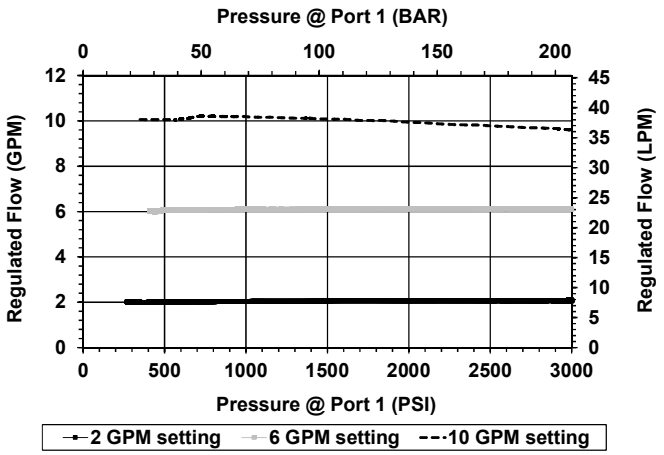


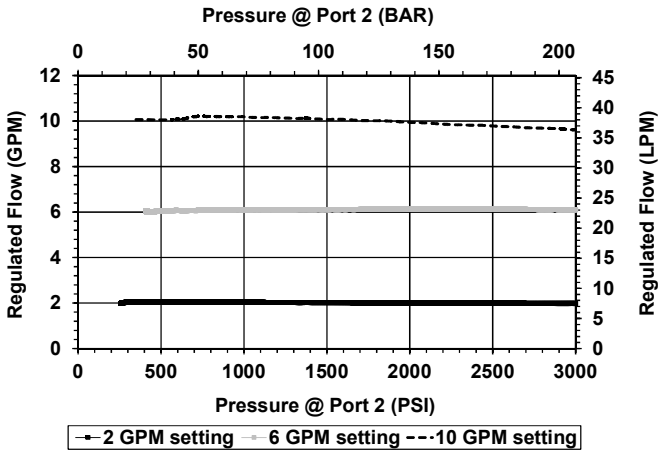


**WARNING:** *the specifications/application data shown in our catalogs and data sheets are intended only as a general guide for the product described (herein). Any specific application should not be undertaken without independent study, evaluation, and testing for suitability.*



Via Malavolti, 36 - 41122 Modena - ITALY - Phone +39 (059) 254895 - Fax +39 (059) 253512 - mail: tecnord@tecnord.com - **www.tecnord.com**

## DIMENSIONS

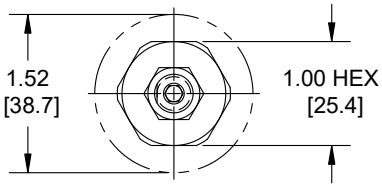


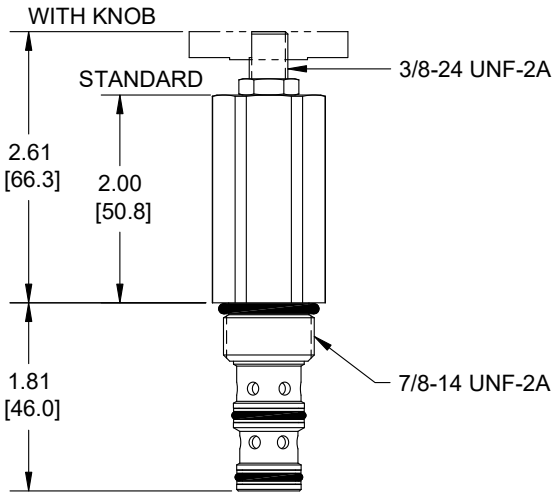


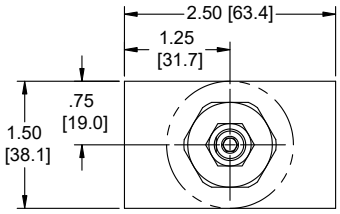


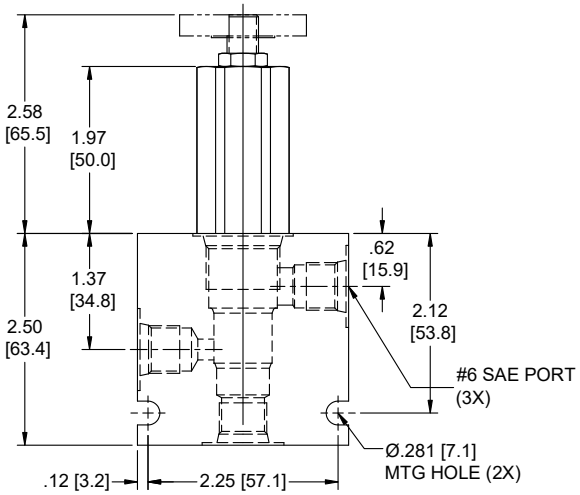


*Body Weight: .60 lbs (.27 kg)*

## ORDERING INFORMATION

**DF-FAP – ____ – ____ – ____**

**OPTIONS**

| | |
|---|---|
| Buna Standard | **00** |
| Viton Standard | **V0** |
| Buna, Knob | **0K** |
| Viton, Knob | **VK** |

**FLOW SETTING**

**XXXX** 1 to 10 GPM

**Preset & Tamper Proof**
Example: 0005 - 5 GPM ±10%

**BODIES**

| | |
|---|---|
| **Blank** | Without Body |
| **N** | 3/4" NPTF Ports |
| **S** | #12 SAE Ports |

**WARNING:** *the specifications/application data shown in our catalogs and data sheets are intended only as a general guide for the product described (herein). Any specific application should not be undertaken without independent study, evaluation, and testing for suitability.*



Via Malavolti, 36 - 41122 Modena - ITALY - Phone +39 (059) 254895 - Fax +39 (059) 253512 - mail: tecnord@tecnord.com - **www.tecnord.com**

## SK-FCQ ADJUSTABLE PRIORITY FLOW CONTROL VALVE

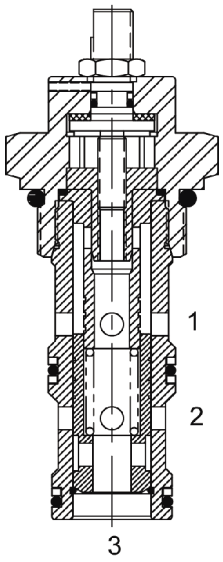


### DESCRIPTION

16 size, 1 5/16-12 thread, “Super” series, adjustable priority flow control valve.

### OPERATION

The SK-FCQ allows pressure compensated flow from (3) to (1) regulated by the pressure present at (3). Excess flow bypasses out (2). The spring chamber is constantly vented at (1).

### FEATURES

- Hardened cage and spool for long life.
- Industry common cavity.

### HYDRAULIC SYMBOL

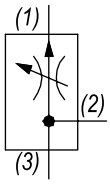


### VALVE SPECIFICATIONS

| | |
|---|---|
| Max Regulated Flow | 25 GPM (95 LPM) |
| Rated Operating Pressure | 500-3000 PSI (34-207 bar) |
| Viscosity Range | 36 to 3000 SSU (3 to 647 cSt) |
| Filtration | ISO 18/16/13 |
| Media Operating Temp. Range | -40° to 250°F (-40° to 120°C) |
| Weight | .96 lbs (.44 kg) |
| Operating Fluid Media | General Purpose Hydraulic Fluid |
| Cartridge Torque Requirements | 90 ft-lbs (122 Nm) |
| Cavity | SUPER 3W |
| Cavity Form Tool (Finishing) | 40500018 |
| Seal Kit | 21191404 |

### PERFORMANCE

Actual Test Data (Cartridge Only)

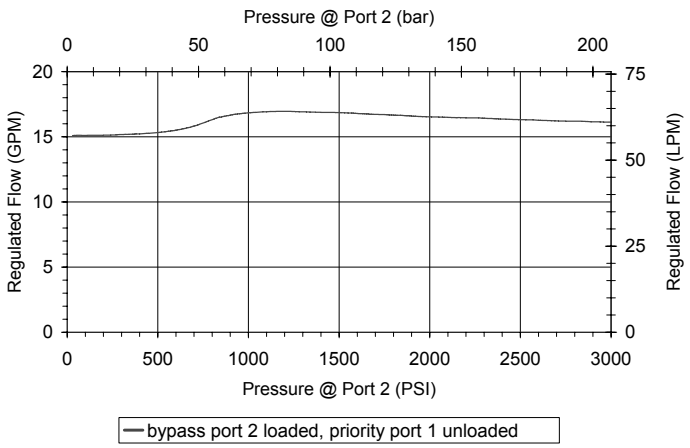


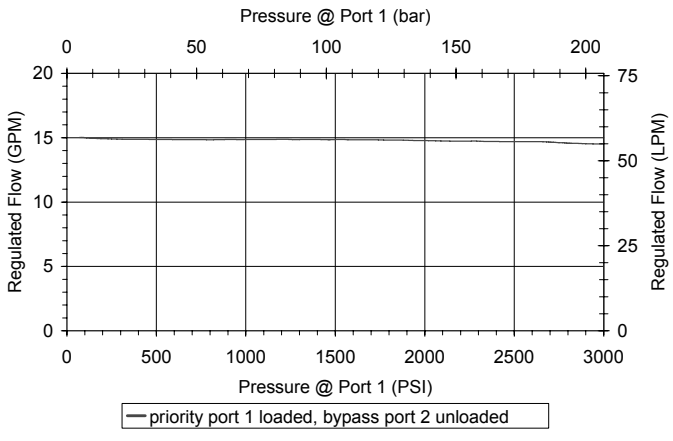


**WARNING:** *the specifications/application data shown in our catalogs and data sheets are intended only as a general guide for the product described (herein). Any specific application should not be undertaken without independent study, evaluation, and testing for suitability.*



Via Malavolti, 36 - 41122 Modena - ITALY - Phone +39 (059) 254895 - Fax +39 (059) 253512 - mail: tecnord@tecnord.com - **www.tecnord.com**

## DIMENSIONS

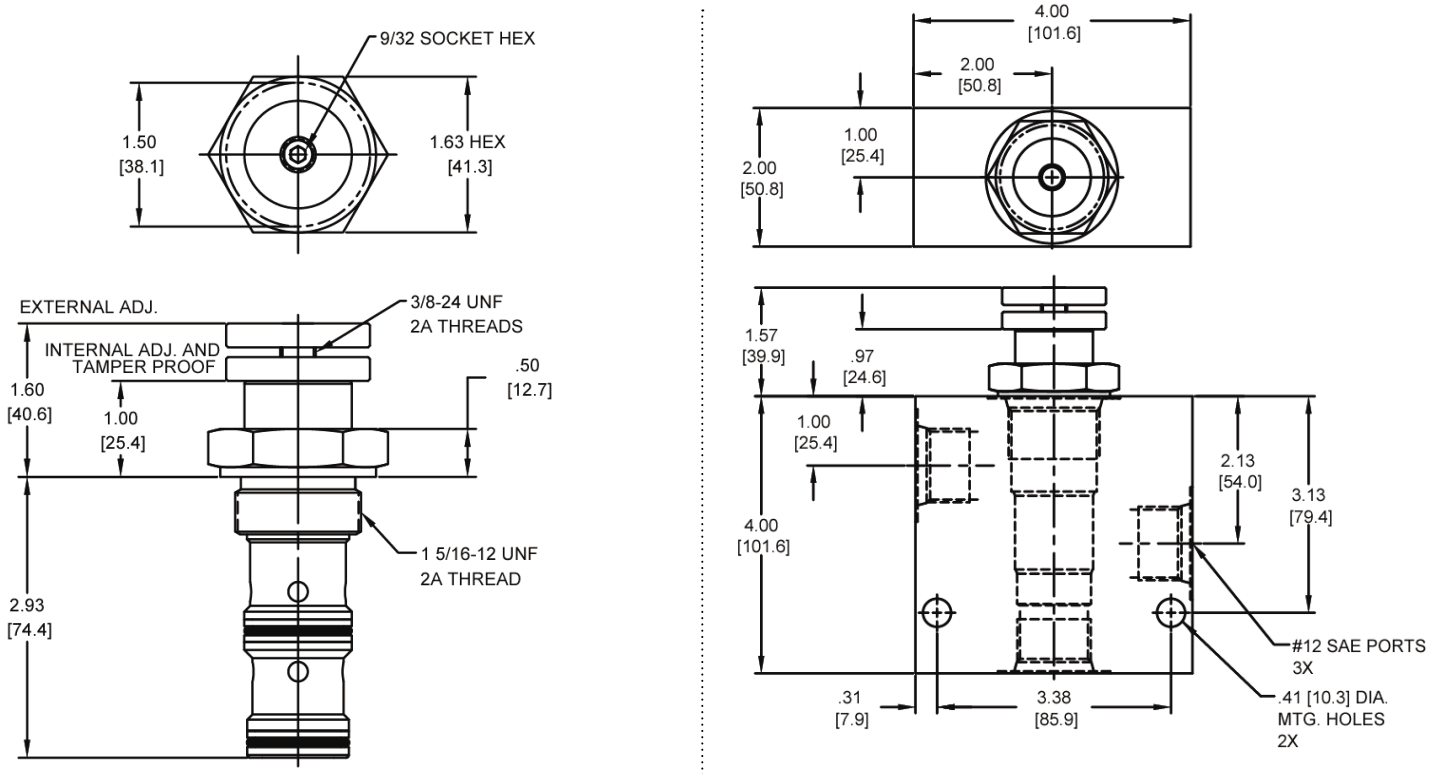


*Body Weight: 2.46 lbs (1.11 kg)*

## ORDERING INFORMATION

**SK-FCQ – ____ – ____ – ____**

**OPTIONS**

| | |
|---|---|
| Buna Standard | **00** |
| Viton Standard | **V0** |
| Buna, Knob | **0K** |
| Viton, Knob | **VK** |
| Buna, Internally Adj. | **0I** |
| Viton, Internally Adj. | **VI** |
| Buna, Tamper Proof | **0T** |
| Viton, Tamper Proof | **VT** |

**FLOW SETTING**

**XXXX** 1 to 25 GPM

**Preset & Tamper Proof**
Example: 0015 - 15 GPM ±10%

**BODIES**

| | |
|---|---|
| **Blank** | Without Body |
| **N** | 3/4" NPTF Ports |
| **S** | #12 SAE Ports |

**WARNING:** *the specifications/application data shown in our catalogs and data sheets are intended only as a general guide for the product described (herein). Any specific application should not be undertaken without independent study, evaluation, and testing for suitability.*



Via Malavolti, 36 - 41122 Modena - ITALY - Phone +39 (059) 254895 - Fax +39 (059) 253512 - mail: tecnord@tecnord.com - **www.tecnord.com**

## PP-FCP FIXED PRIORITY FLOW CONTROL VALVE

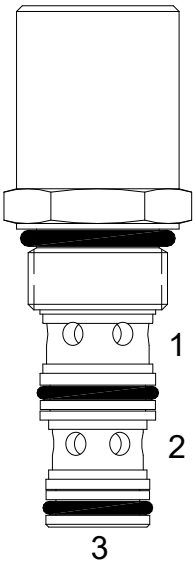


### DESCRIPTION

8 size, 3/4-16 thread, “Power” series, fixed priority flow control valve.

### OPERATION

The PP-FCP allows pressure compensated flow from (3) to (1) regulated by the pressure present at (3). Excess flow bypasses out (2).

### FEATURES

- Hardened parts for long life.
- Industry common cavity.

*Test data shown on this sheet, for condition of port (2) to tank. Data on next page, for condition of port (3) to tank.*

### HYDRAULIC SYMBOL

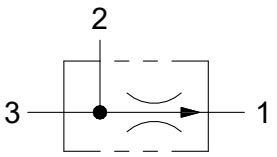


### PERFORMANCE

Actual Test Data (Cartridge Only)

### VALVE SPECIFICATIONS

| | |
|---|---|
| Maximum Flow | 5 GPM (19 LPM) |
| Rated Operating Pressure | 3500 PSI (241 bar) |
| Viscosity Range | 36 to 3000 SSU (3 to 647 cSt) |
| Filtration | ISO 18/16/13 |
| Media Operating Temp. Range | -40° to 250°F (-40° to 120°C) |
| Weight | .56 lbs (.25 kg) |
| Operating Fluid Media | General Purpose Hydraulic Fluid |
| Cartridge Torque Requirements | 25 ft-lbs (34 Nm) |
| Cavity | POWER 3W |
| Cavity Form Tool (Finishing) | 40500024 |
| Seal Kit | 21191106 |

**WARNING:** *the specifications/application data shown in our catalogs and data sheets are intended only as a general guide for the product described (herein). Any specific application should not be undertaken without independent study, evaluation, and testing for suitability.*



Via Malavolti, 36 - 41122 Modena - ITALY - Phone +39 (059) 254895 - Fax +39 (059) 253512 - mail: tecnord@tecnord.com - **www.tecnord.com**

## DIMENSIONS

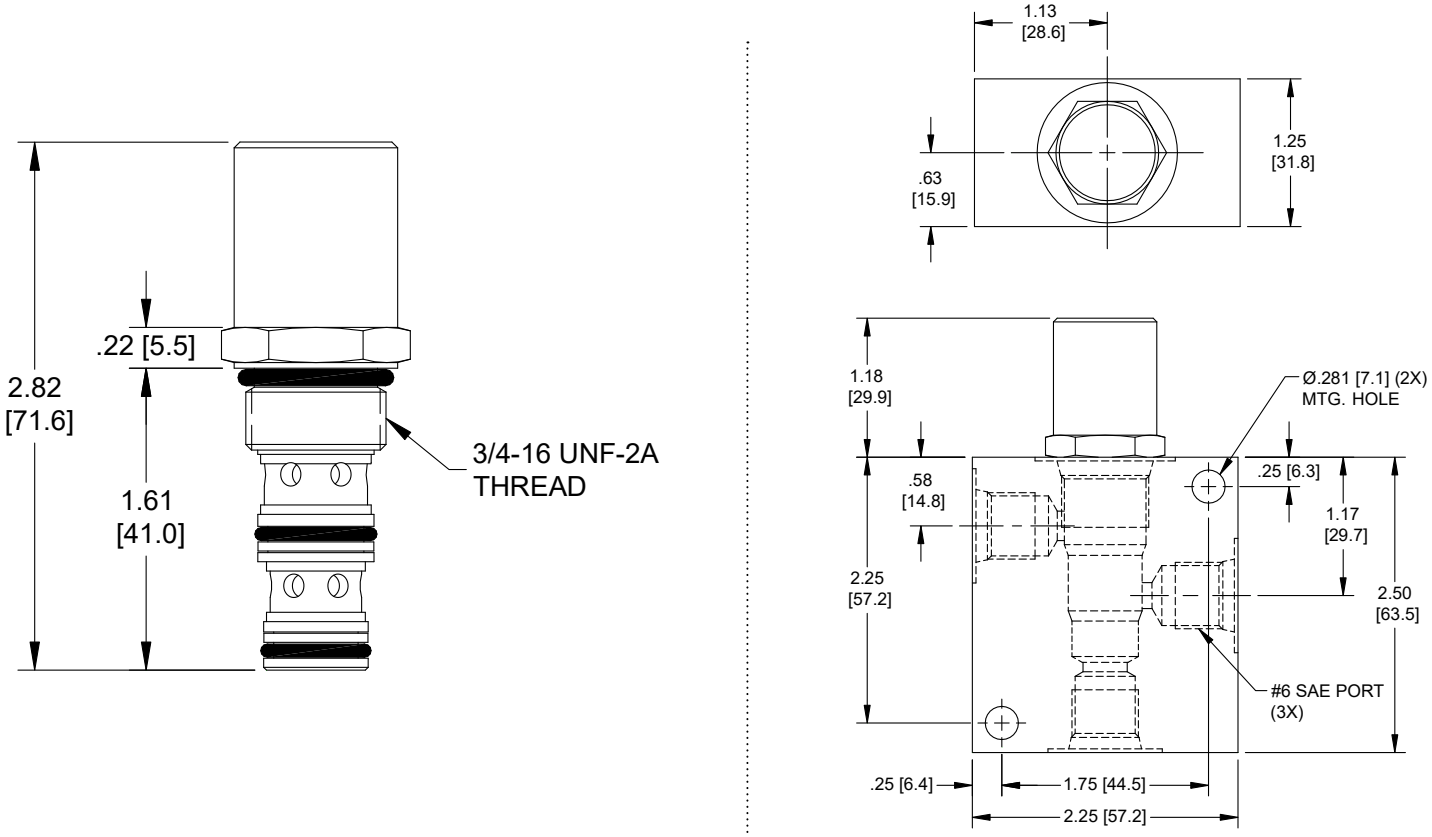


*Body Weight: .56 lbs (.25 kg)*

## ORDERING INFORMATION

**PP-FCP** – ____ – ____ – ____

**OPTIONS**

| | |
|---|---|
| Buna Standard | **00** |
| Viton Standard | **V0** |

**FLOW SETTING**

| | |
|---|---|
| **01.0** | 1 GPM |
| **02.0** | 2 GPM |
| **03.0** | 3 GPM |
| **04.0** | 4 GPM |
| **05.0** | 5 GPM |
| | ± 15% |

**BODIES**

| | |
|---|---|
| **Blank** | Without Body |
| **N** | 1/4 NPTF Ports |
| **S** | #6 SAE Ports |

**WARNING:** *the specifications/application data shown in our catalogs and data sheets are intended only as a general guide for the product described (herein). Any specific application should not be undertaken without independent study, evaluation, and testing for suitability.*



Via Malavolti, 36 - 41122 Modena - ITALY - Phone +39 (059) 254895 - Fax +39 (059) 253512 - mail: tecnord@tecnord.com - **www.tecnord.com**

## DF-FCP FIXED PRIORITY FLOW CONTROL VALVE

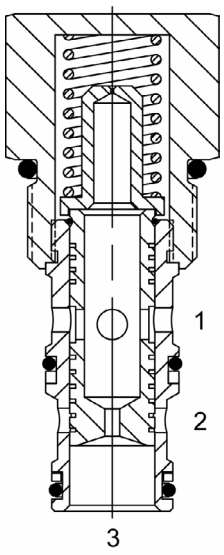


### DESCRIPTION

10 size, 7/8-14 thread, “Delta” series, fixed priority flow control valve.

### OPERATION

The DF-FCP allows pressure compensated flow from (3) to (1) regulated by the pressure present at (3). Excess flow bypasses out (2). The spring chamber is constantly vented at (1).

### FEATURES

- Hardened parts for long life.
- Industry common cavity.

### HYDRAULIC SYMBOL

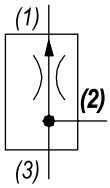


### VALVE SPECIFICATIONS

| | |
|---|---|
| Maximum Flow | 10 GPM (38 LPM) |
| Rated Operating Pressure | 3000 PSI (207 bar) |
| Viscosity Range | 36 to 3000 SSU (3 to 647 cSt) |
| Filtration | ISO 18/16/13 |
| Media Operating Temp. Range | -40° to 250°F (-40° to 120°C) |
| Weight | .26 lbs (.12 kg) |
| Operating Fluid Media | General Purpose Hydraulic Fluid |
| Cartridge Torque Requirements | 30 ft-lbs (40.6 Nm) |
| Cavity | DELTA 3W |
| Cavity Form Tool (Finishing) | 40500001 |
| Seal Kit | 21191206 |

### PERFORMANCE

Actual Test Data (Cartridge Only)

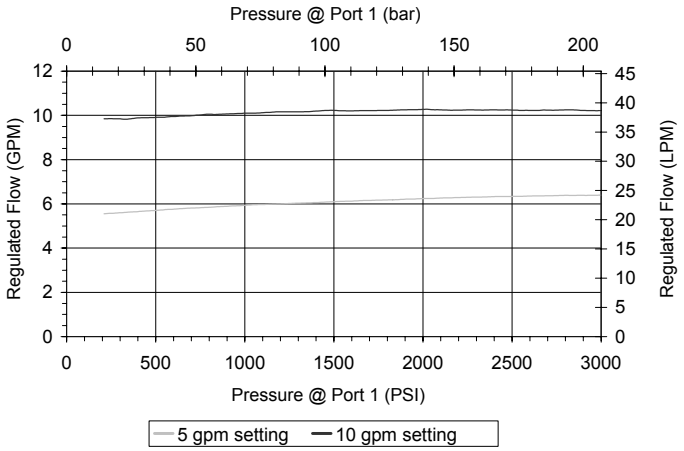


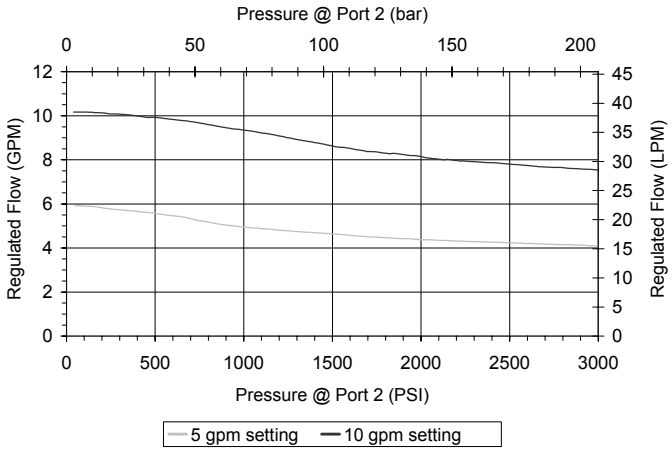


**WARNING:** *the specifications/application data shown in our catalogs and data sheets are intended only as a general guide for the product described (herein). Any specific application should not be undertaken without independent study, evaluation, and testing for suitability.*



Via Malavolti, 36 - 41122 Modena - ITALY - Phone +39 (059) 254895 - Fax +39 (059) 253512 - mail: tecnord@tecnord.com - **www.tecnord.com**

## DIMENSIONS

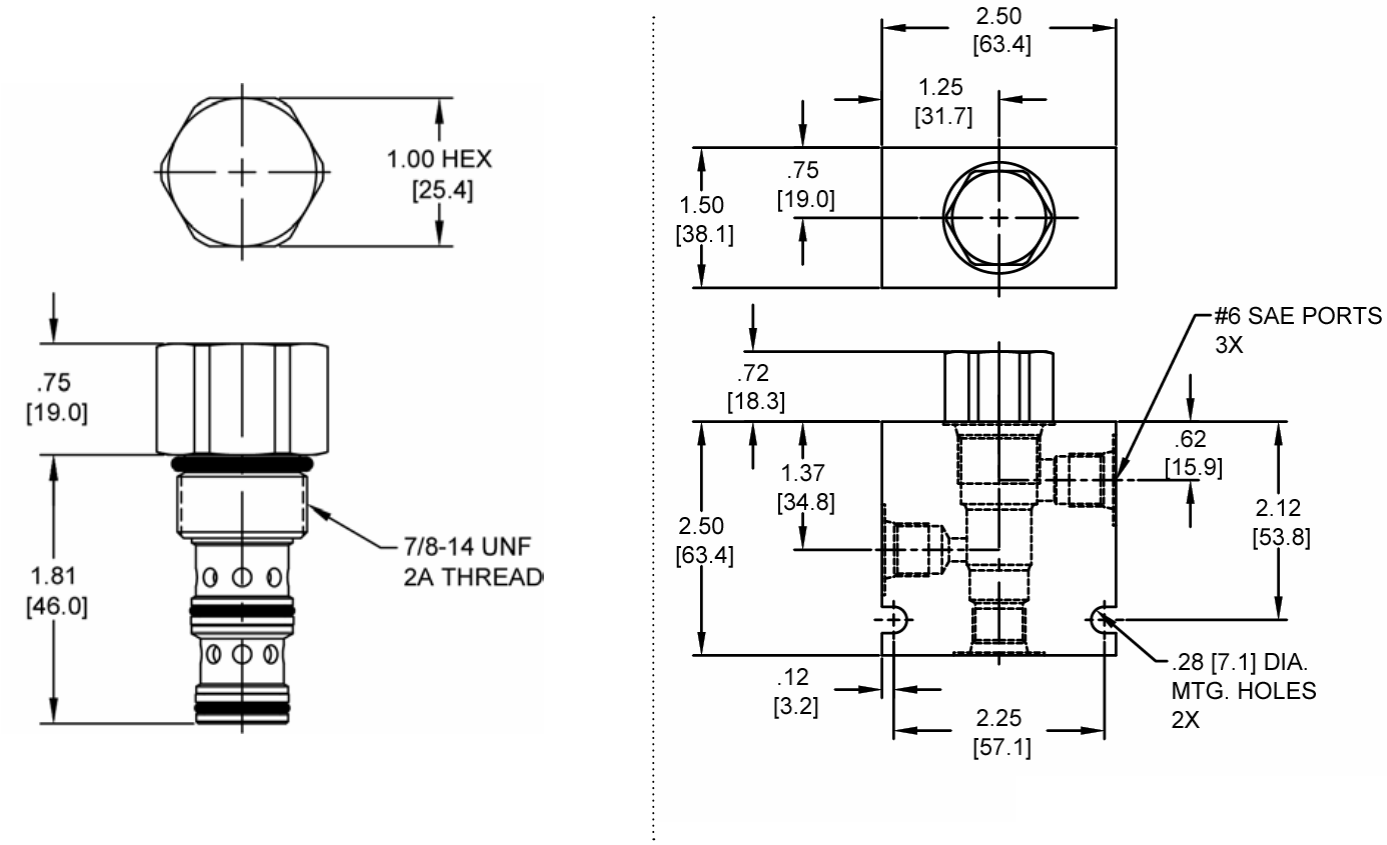


*Body Weight: .76 lbs (.35 kg)*

## ORDERING INFORMATION

**DF-FCP – ____ – ____ – ____**

**OPTIONS**

| | |
|---|---|
| Buna Standard | **00** |
| Viton Standard | **V0** |

**FLOW SETTING**

| | |
|---|---|
| **01.0** | 1 GPM |
| **02.0** | 2 GPM |
| **03.0** | 3 GPM |
| **04.0** | 4 GPM |
| **05.0** | 5 GPM |
| **06.0** | 6 GPM |
| **07.0** | 7 GPM |
| **08.0** | 8 GPM |
| **09.0** | 9 GPM |
| **10.0** | 10 GPM |
| | ± 15% |

**BODIES**

| | |
|---|---|
| **Blank** | Without Body |
| **N** | 1/4" NPTF Ports |
| **S** | #6 SAE Ports |

**WARNING:** *the specifications/application data shown in our catalogs and data sheets are intended only as a general guide for the product described (herein). Any specific application should not be undertaken without independent study, evaluation, and testing for suitability.*



Via Malavolti, 36 - 41122 Modena - ITALY - Phone +39 (059) 254895 - Fax +39 (059) 253512 - mail: tecnord@tecnord.com - **www.tecnord.com**

## SK-FCP FIXED PRIORITY FLOW CONTROL VALVE

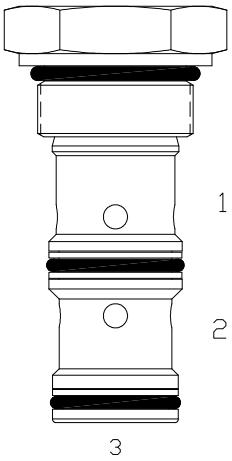


### DESCRIPTION

16 size, 1 5/16-12 thread, “Super” series, fixed priority flow control valve.

### OPERATION

The SK-FCP allows pressure compensated flow from (3) to (1) regulated by the pressure present at (3). Excess flow bypasses out (2). The spring chamber is constantly vented at (1).

### FEATURES

- Hardened parts for long life.
- Industry common cavity.

*For adjustable setting see SK-FCQ.*

### HYDRAULIC SYMBOL

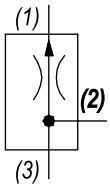


### PERFORMANCE

Actual Test Data (Cartridge Only)

### VALVE SPECIFICATIONS

| | |
|---|---|
| Priority Flow Rate | As specified from 5-25 GPM (19-95 LPM) |
| Rated Operating Pressure | 500-3000 PSI (34-207 bar) |
| Viscosity Range | 36 to 3000 SSU (3 to 647 cSt) |
| Filtration | ISO 18/16/13 |
| Media Operating Temp. Range | -40° to 250°F (-40° to 120°C) |
| Weight | .85 lbs (.39 kg) |
| Operating Fluid Media | General Purpose Hydraulic Fluid |
| Cartridge Torque Requirements | 90 ft-lbs (122 Nm) |
| Cavity | SUPER 3W |
| Cavity Form Tool (Finishing) | 40500018 |
| Seal Kit | 21191404 |

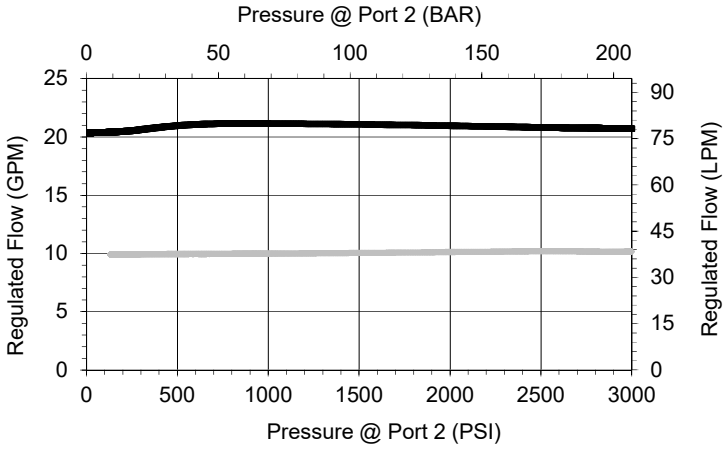


- Bypass port 2 loaded, priority port 1 unloaded

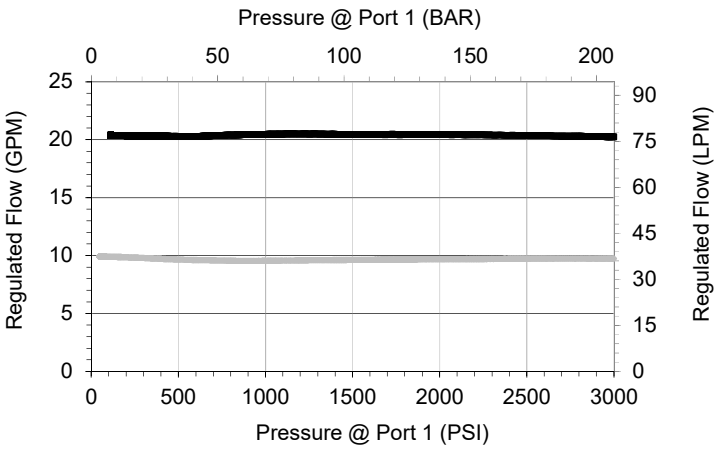


- Priority port 1 loaded, bypass port 2 unloaded

**WARNING:** *the specifications/application data shown in our catalogs and data sheets are intended only as a general guide for the product described (herein). Any specific application should not be undertaken without independent study, evaluation, and testing for suitability.*



Via Malavolti, 36 - 41122 Modena - ITALY - Phone +39 (059) 254895 - Fax +39 (059) 253512 - mail: tecnord@tecnord.com - **www.tecnord.com**

## DIMENSIONS

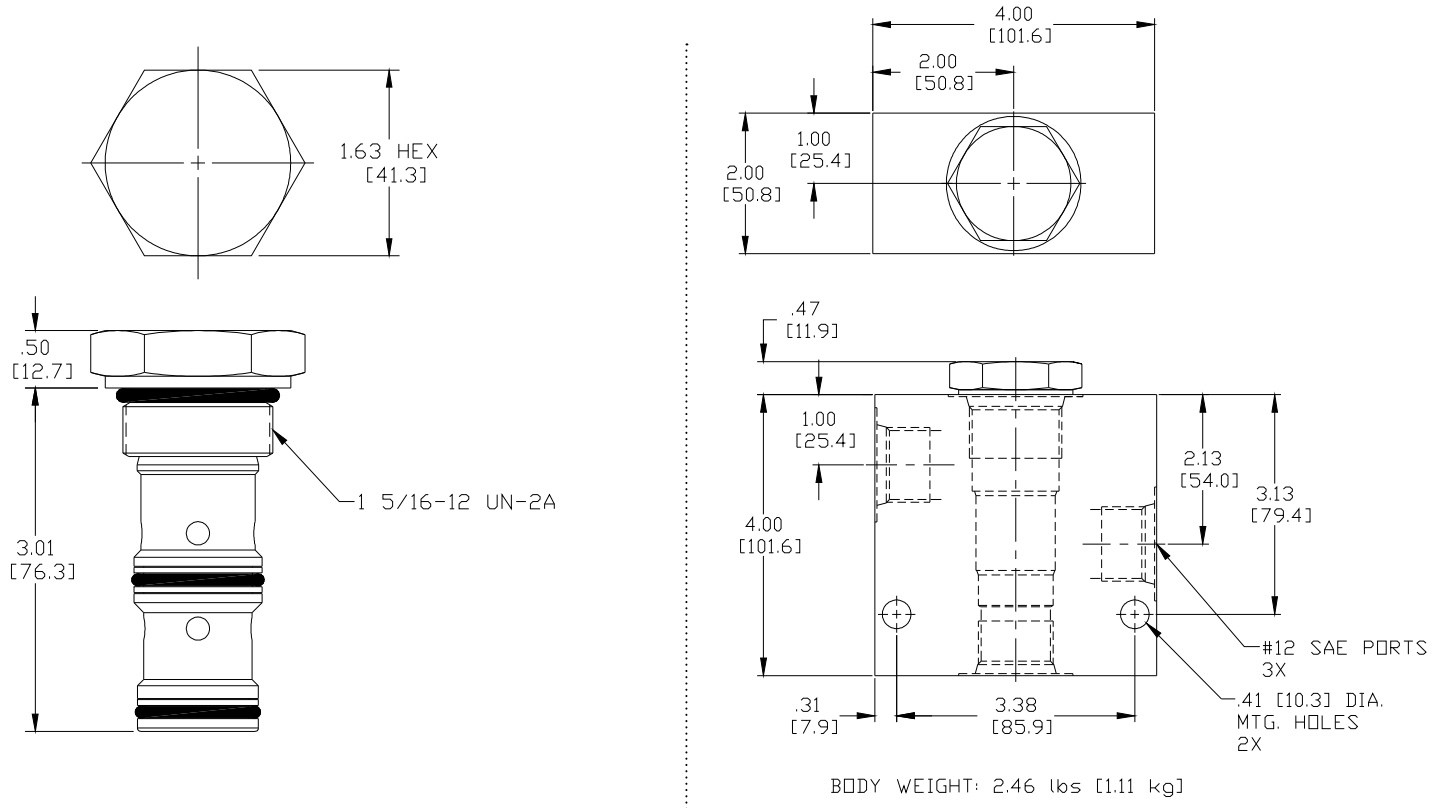


*Body Weight: 2.46 lbs (1.11 kg)*

## ORDERING INFORMATION

**SK-FCP – ____ – ____ – ____**

**OPTIONS**

| | |
|---|---|
| Buna Standard | **00** |
| Viton Standard | **V0** |

**FLOW SETTING**

| | |
|---|---|
| **001** | |
| **0** | 10 GPM |
| **002** | |
| **5** | 25 GPM |

**Additional flow settings available upon request**

**BODIES**

| | |
|---|---|
| **Blank** | Without Body |
| **N** | 3/4 NPTF Ports |
| **S** | #12 SAE Ports |

W 50/ 2022

**WARNING:** *the specifications/application data shown in our catalogs and data sheets are intended only as a general guide for the product described (herein). Any specific application should not be undertaken without independent study, evaluation, and testing for suitability.*

## DG-PDS STEERING PRIORITY FLOW CONTROL VALVE WITH STATIC LOAD SENSE

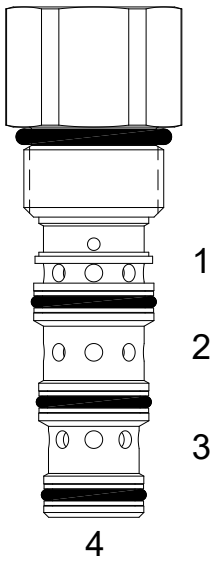


### DESCRIPTION

10 size, 7/8-14 thread, “Delta” series, steering priority flow control valve with static load sense.

### OPERATION

The DG-PDS allows priority flow from (2) to (1) regardless of load pressure at either port (1) or port (3). Excess flow bypasses out (3). Port (4) is the load sense port.

### FEATURES

- Hardened cage and spool for long life.
- Industry common cavity.

### HYDRAULIC SYMBOL

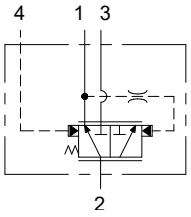


### VALVE SPECIFICATIONS

| | |
|---|---|
| Max Regulated Flow | 9 GPM (34 LPM) |
| Rated Operating Pressure | 3000 PSI (207 bar) |
| Viscosity Range | 36 to 3000 SSU (3 to 647 cSt) |
| Filtration | ISO 18/16/13 |
| Media Operating Temp. Range | -40° to 250°F (-40° to 120°C) |
| Weight | 0.38 lbs (.17 kg) |
| Operating Fluid Media | General Purpose Hydraulic Fluid |
| Cartridge Torque Requirements | 30 ft-lbs (40.6 Nm) |
| Cavity | DELTA 4W |
| Cavity Form Tool (Finishing) | 40500002 |
| Seal Kit | 21191214 |

### PERFORMANCE

Actual Test Data (Cartridge Only)

**Priority port 1 loaded, bypass port 3 unloaded (100 PSI spring option)**

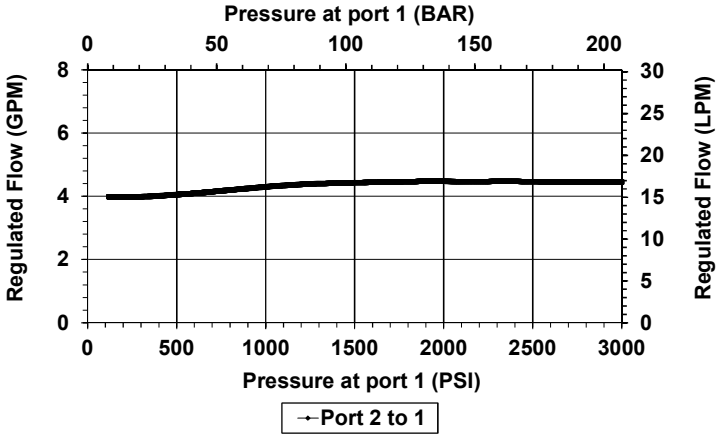


**Bypass port 3 loaded, priority port 1 unloaded (100 PSI spring option)**

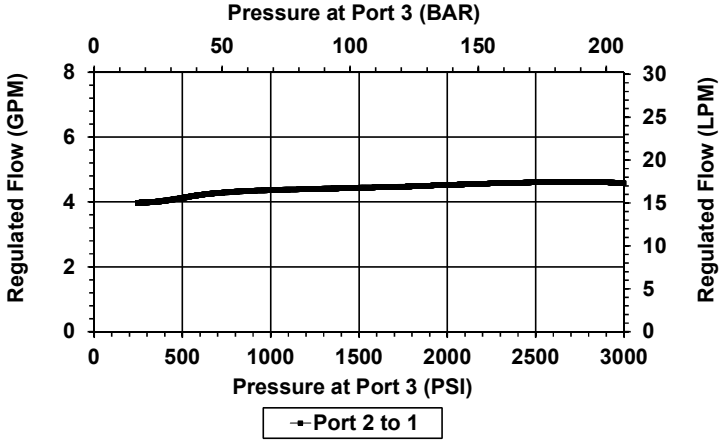


**WARNING:** *the specifications/application data shown in our catalogs and data sheets are intended only as a general guide for the product described (herein). Any specific application should not be undertaken without independent study, evaluation, and testing for suitability.*



Via Malavolti, 36 - 41122 Modena - ITALY - Phone +39 (059) 254895 - Fax +39 (059) 253512 - mail: tecnord@tecnord.com - **www.tecnord.com**

## DIMENSIONS

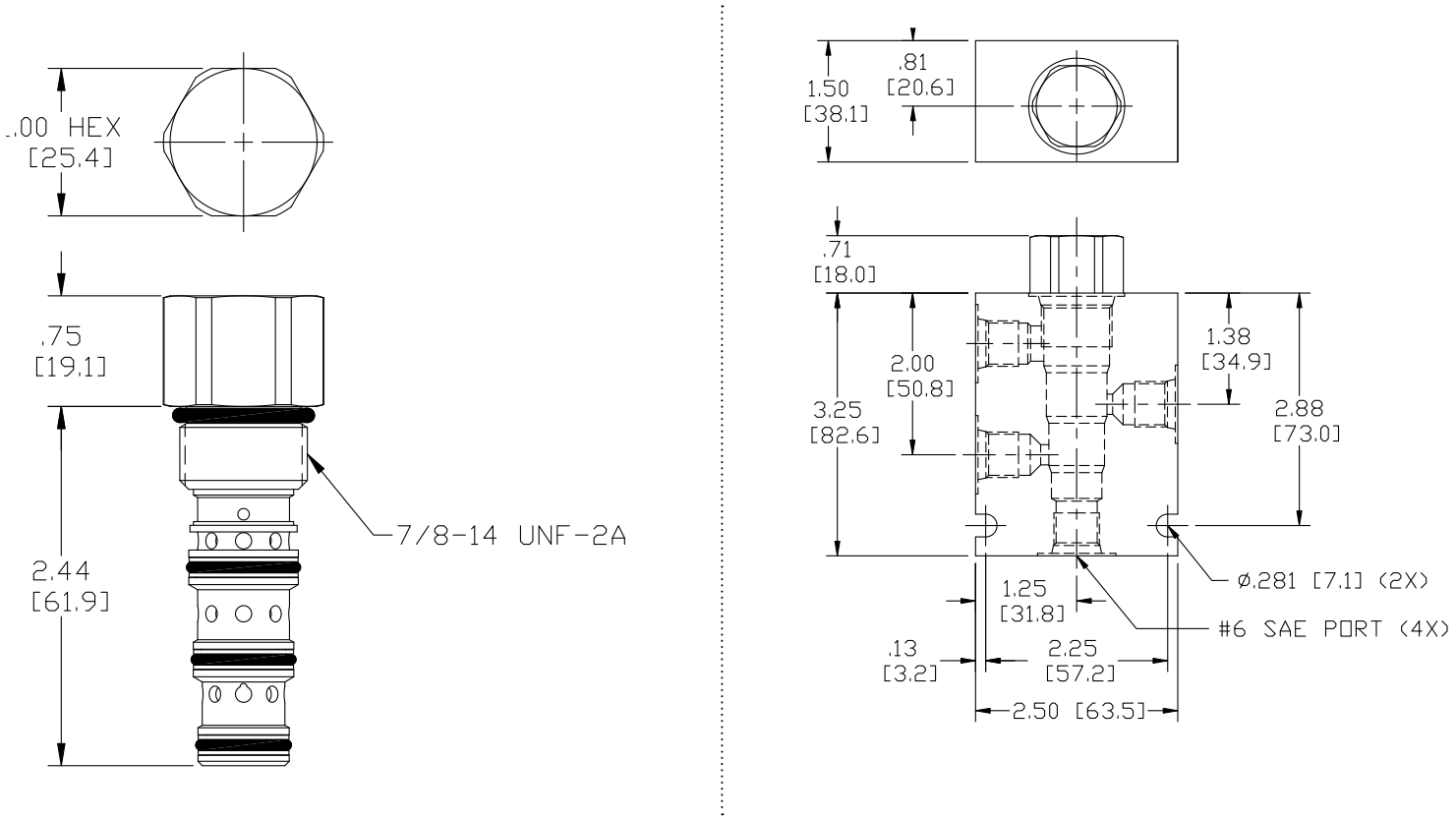


*Body Weight: .99 lbs (.45 kg)*

## ORDERING INFORMATION

**DG-PDS** – ____ – ____ – ____

**OPTIONS**

| | |
|---|---|
| Buna Standard | **00** |
| Viton Standard | **V0** |
| Buna Standard, Screen | **A0** |
| Viton Standard, Screen | **W0** |

**Screen located at CF (1) port**

**PRESSURE SETTING**

| | |
|---|---|
| **0100** | 120 PSI |
| **0150** | 300 PSI |
| **0250** | 250 PSI |

**BODIES**

| | |
|---|---|
| **Blank** | Without Body |
| **N** | 3/4 NPTF Ports |
| **S** | #12 SAE Ports |

**WARNING:** *the specifications/application data shown in our catalogs and data sheets are intended only as a general guide for the product described (herein). Any specific application should not be undertaken without independent study, evaluation, and testing for suitability.*



Via Malavolti, 36 - 41122 Modena - ITALY - Phone +39 (059) 254895 - Fax +39 (059) 253512 - mail: tecnord@tecnord.com - **www.tecnord.com**

## SO-PDS STEERING PRIORITY FLOW CONTROL VALVE WITH STATIC LOAD SENSE

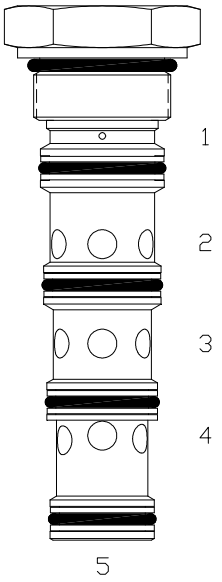


### DESCRIPTION

16 size, 1 5/16-12 thread, “Super” series, steering priority flow control valve with static load sense.

### OPERATION

The SO-PDS allows priority flow from (3) to (4) regardless of load pressure at either port (2) or port (4). Excess flow bypasses out (2). Port (1) is the load sense port.

### FEATURES

- Hardened cage and spool for long life.
- Industry common cavity.

### HYDRAULIC SYMBOL

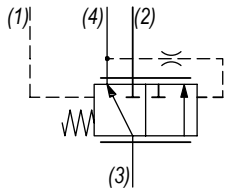


### VALVE SPECIFICATIONS

| | |
|---|---|
| Max Regulated Flow | 20 GPM (76 LPM) |
| Rated Operating Pressure | 3000 PSI (207 bar) |
| Viscosity Range | 36 to 3000 SSU (3 to 647 cSt) |
| Filtration | ISO 18/16/13 |
| Media Operating Temp. Range | -40° to 250°F (-40° to 120°C) |
| Weight | 1.05 lbs (.48 kg) |
| Operating Fluid Media | General Purpose Hydraulic Fluid |
| Cartridge Torque Requirements | 90 ft-lbs (122 Nm) |
| Cavity | SUPER 5WS |
| Cavity Form Tool (Finishing) | 40500020 |
| Seal Kit | 21191410 |

### PERFORMANCE

Actual Test Data (Cartridge Only)

**Bypass port 2 loaded, priority port 4 unloaded**

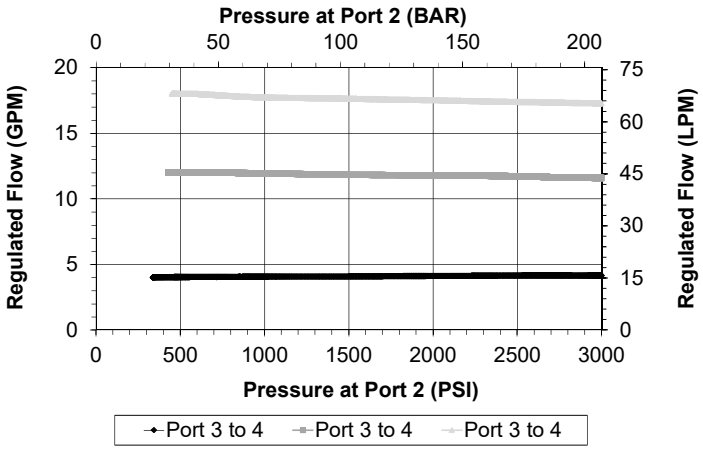


**Priority port 4 loaded, bypass port 2 unloaded**

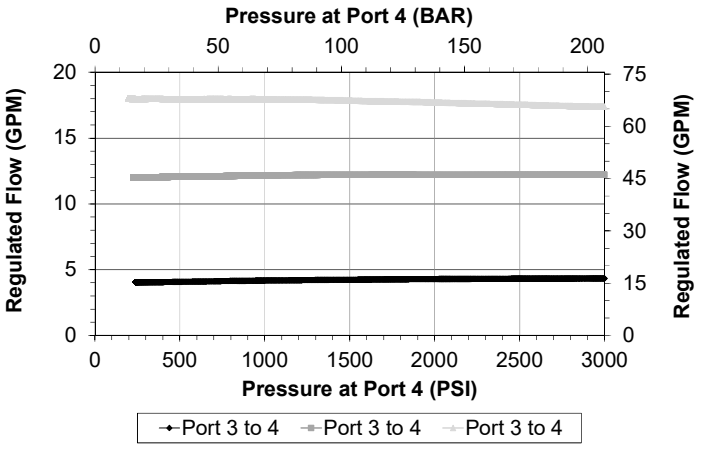


**WARNING:** *the specifications/application data shown in our catalogs and data sheets are intended only as a general guide for the product described (herein). Any specific application should not be undertaken without independent study, evaluation, and testing for suitability.*



Via Malavolti, 36 - 41122 Modena - ITALY - Phone +39 (059) 254895 - Fax +39 (059) 253512 - mail: tecnord@tecnord.com - **www.tecnord.com**

## DIMENSIONS

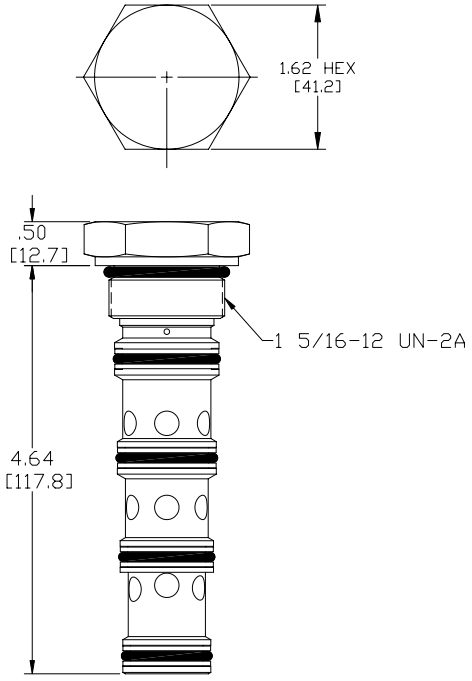


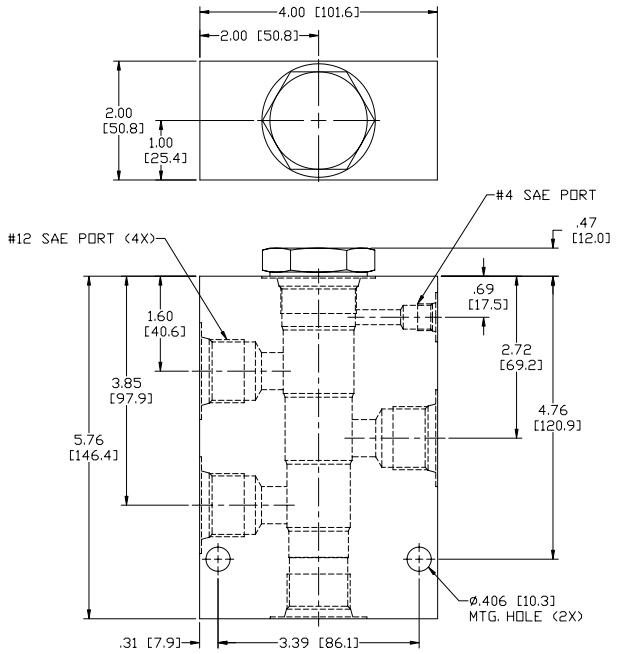


*Body Weight: 3.76 lbs (1.62 kg)*

## ORDERING INFORMATION

**SO-PDS** – ____ – ____ – ____

**OPTIONS**
Buna Standard **00**
Viton Standard **V0**

**PRESSURE SETTING**
**0120** 120 PSI
**0300** 300 PSI

**BODIES**
**Blank** Without Body
**N** 3/4 NPTF Ports
**S** #12 SAE Ports

W 50/ 2022

**WARNING:** *the specifications/application data shown in our catalogs and data sheets are intended only as a general guide for the product described (herein). Any specific application should not be undertaken without independent study, evaluation, and testing for suitability.*

## DG-PDD STEERING PRIORITY FLOW CONTROL VALVE WITH DYNAMIC LOAD SENSE

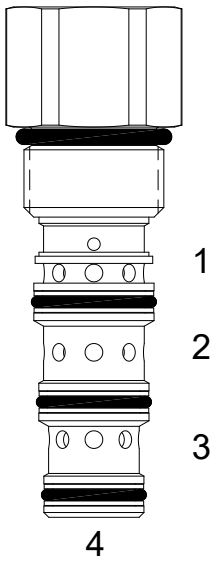


### DESCRIPTION

10 size, 7/8-14 thread, “Delta” series, steering priority flow control valve with dynamic load sense.

### OPERATION

The DG-PDD allows priority flow from (2) to (1) regardless of load pressure at either port (1) or port (3). Excess flow bypasses out (3). Port (4) is the load sense port.

### FEATURES

- Hardened cage and spool for long life.
- Industry common cavity.

### HYDRAULIC SYMBOL

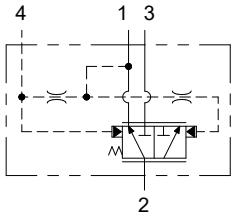


### PERFORMANCE

Actual Test Data (Cartridge Only)

### VALVE SPECIFICATIONS

| | |
|---|---|
| Max Regulated Flow | 9 GPM (34 LPM) |
| Rated Operating Pressure | 3000 PSI (207 bar) |
| Viscosity Range | 36 to 3000 SSU (3 to 647 cSt) |
| Filtration | ISO 18/16/13 |
| Media Operating Temp. Range | -40° to 250°F (-40° to 120°C) |
| Weight | 0.38 lbs (.17 kg) |
| Operating Fluid Media | General Purpose Hydraulic Fluid |
| Cartridge Torque Requirements | 30 ft-lbs (40.6 Nm) |
| Cavity | DELTA 4W |
| Cavity Form Tool (Finishing) | 40500002 |
| Seal Kit | 21191214 |

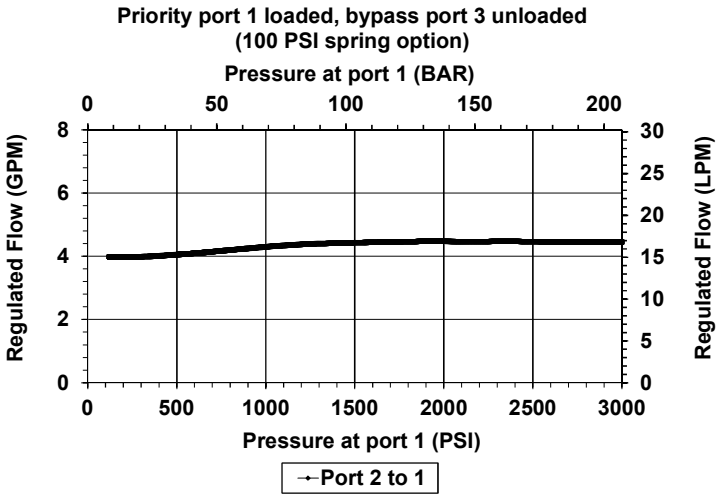


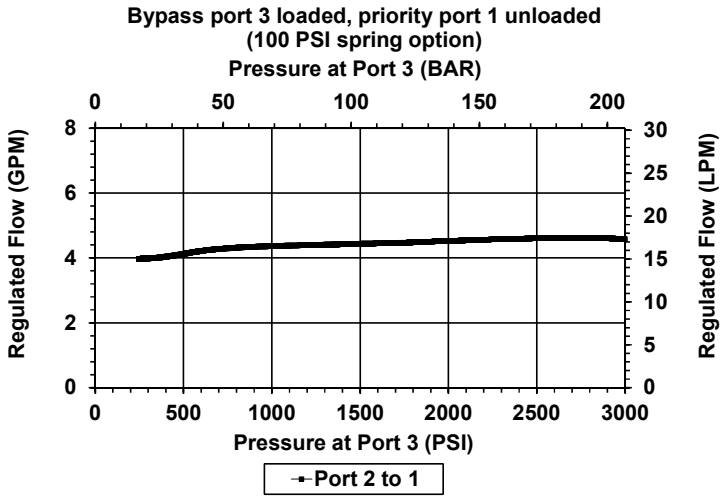


**WARNING:** *the specifications/application data shown in our catalogs and data sheets are intended only as a general guide for the product described (herein). Any specific application should not be undertaken without independent study, evaluation, and testing for suitability.*



Via Malavolti, 36 - 41122 Modena - ITALY - Phone +39 (059) 254895 - Fax +39 (059) 253512 - mail: tecnord@tecnord.com - **www.tecnord.com**

## DIMENSIONS

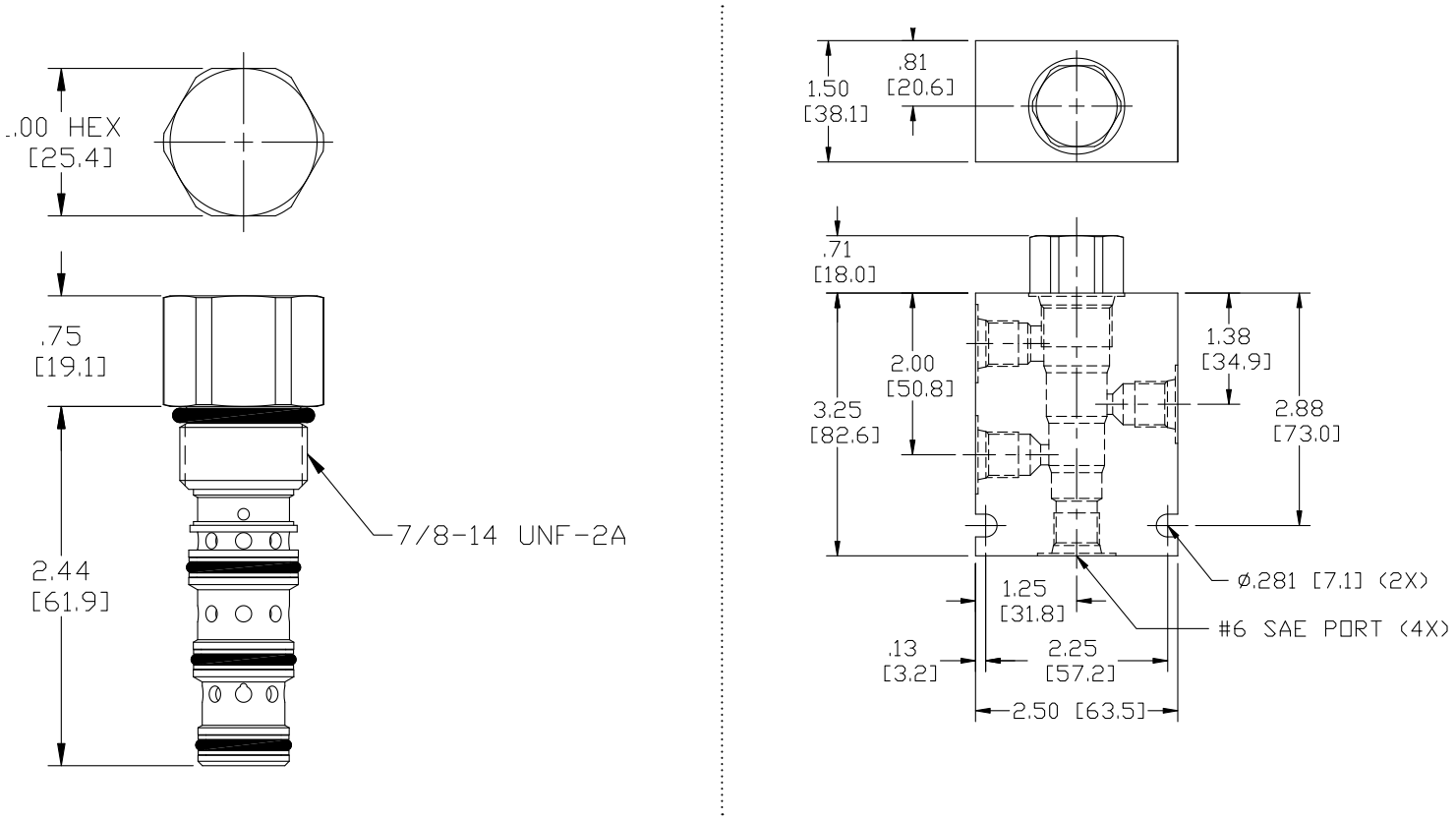


*Body Weight: .99 lbs (.45 kg)*

## ORDERING INFORMATION

**DG-PDS** – _____ – _____ – _____

**OPTIONS**

| | |
|---|---|
| Buna Standard | **00** |
| Viton Standard | **V0** |
| Buna Standard, Screen | **A0** |
| Viton Standard, Screen | **W0** |

**Screen located at CF (1) port**

**PRESSURE SETTING**

| | |
|---|---|
| **0100** | 120 PSI |
| **0150** | 300 PSI |
| **0250** | 250 PSI |

**BODIES**

| | |
|---|---|
| **Blank** | Without Body |
| **N** | 3/4 NPTF Ports |
| **S** | #12 SAE Ports |

**WARNING:** *the specifications/application data shown in our catalogs and data sheets are intended only as a general guide for the product described (herein). Any specific application should not be undertaken without independent study, evaluation, and testing for suitability.*



Via Malavolti, 36 - 41122 Modena - ITALY - Phone +39 (059) 254895 - Fax +39 (059) 253512 - mail: tecnord@tecnord.com - **www.tecnord.com**

## **SO-PDD** STEERING PRIORITY FLOW CONTROL VALVE WITH DYNAMIC LOAD SENSE

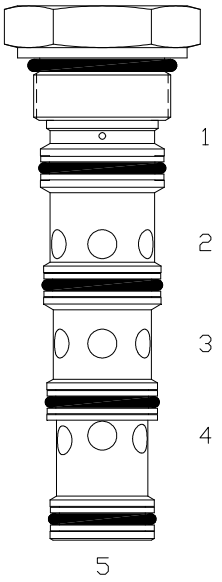


### DESCRIPTION

16 size, 1 5/16-12 thread, “Super” series, steering priority flow control valve with dynamic load sense.

### OPERATION

The SO-PDD allows priority flow from (3) to (4) regardless of load pressure at either port (2) or port (4). Excess flow bypasses out (2). Port (1) is the load sense port.

### FEATURES

- Hardened cage and spool for long life.
- Industry common cavity.

### HYDRAULIC SYMBOL

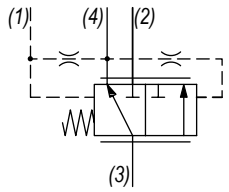


### VALVE SPECIFICATIONS

| | |
|---|---|
| Max Regulated Flow | 20 GPM (76 LPM) |
| Rated Operating Pressure | 3000 PSI (207 bar) |
| Viscosity Range | 36 to 3000 SSU (3 to 647 cSt) |
| Filtration | ISO 18/16/13 |
| Media Operating Temp. Range | -40° to 250°F (-40° to 120°C) |
| Weight | 1.05 lbs (.48 kg) |
| Operating Fluid Media | General Purpose Hydraulic Fluid |
| Cartridge Torque Requirements | 90 ft-lbs (122 Nm) |
| Cavity | SUPER 5WS |
| Cavity Form Tool (Finishing) | 40500020 |
| Seal Kit | 21191410 |

### PERFORMANCE

Actual Test Data (Cartridge Only)

**Bypass port 2 loaded, priority port 4 unloaded**

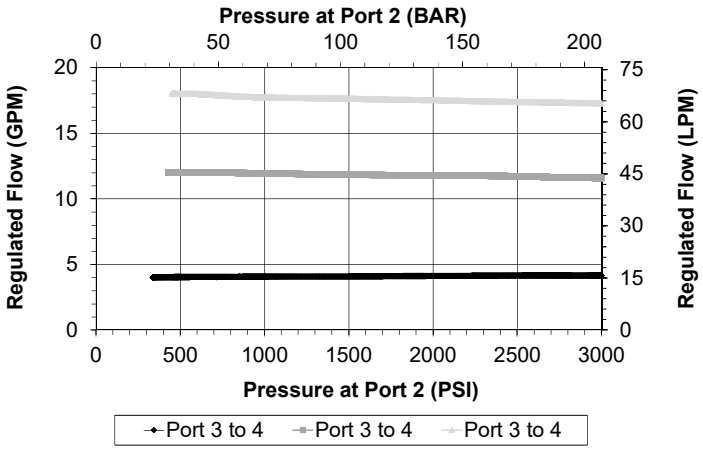


**Priority port 4 loaded, bypass port 2 unloaded**

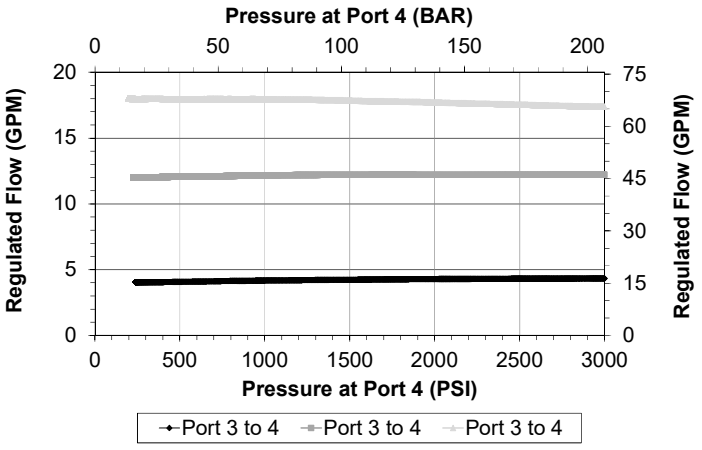


**WARNING:** *the specifications/application data shown in our catalogs and data sheets are intended only as a general guide for the product described (herein). Any specific application should not be undertaken without independent study, evaluation, and testing for suitability.*



Via Malavolti, 36 - 41122 Modena - ITALY - Phone +39 (059) 254895 - Fax +39 (059) 253512 - mail: tecnord@tecnord.com - **www.tecnord.com**

## DIMENSIONS

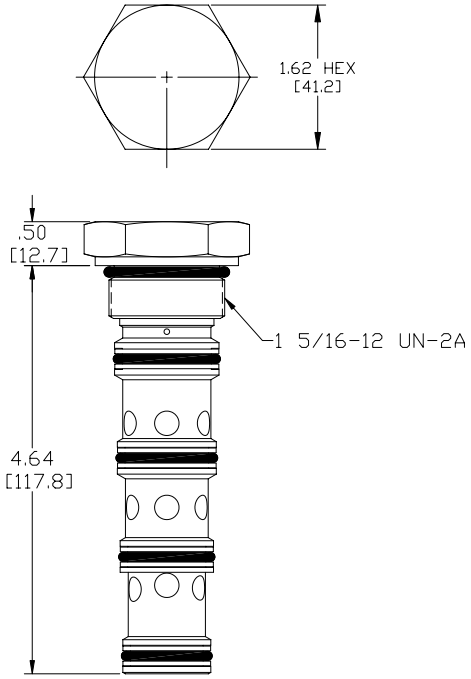


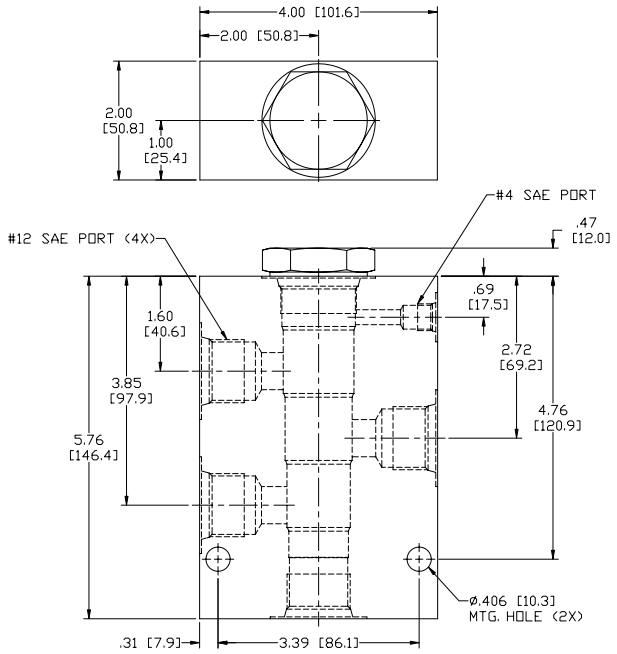


*Body Weight: 3.76 lbs (1.62 kg)*

## ORDERING INFORMATION

**SO-PDD** – ____ – ____ – ____

**OPTIONS**
Buna Standard **00**
Viton Standard **V0**

**PRESSURE SETTING**
**0120** 120 PSI
**0300** 300 PSI

**BODIES**
**Blank** Without Body
**N** 3/4 NPTF Ports
**S** #12 SAE Ports

**WARNING:** *the specifications/application data shown in our catalogs and data sheets are intended only as a general guide for the product described (herein). Any specific application should not be undertaken without independent study, evaluation, and testing for suitability.*



Via Malavolti, 36 - 41122 Modena - ITALY - Phone +39 (059) 254895 - Fax +39 (059) 253512 - mail: tecnord@tecnord.com - **www.tecnord.com**

**WARNING:** *the specifications/application data shown in our catalogs and data sheets are intended only as a general guide for the product described (herein). Any specific application should not be undertaken without independent study, evaluation, and testing for suitability.*



Via Malavolti, 36 - 41122 Modena - ITALY - Phone +39 (059) 254895 - Fax +39 (059) 253512 - mail: tecnord@tecnord.com - **www.tecnord.com**

## VELOCITY FUSES

| | GPM | PSI | LPM | BAR | CAVITY | MODEL | PAGE |
|---|---|---|---|---|---|---|---|
| 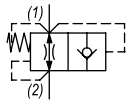 | 6 | 3500 | 23 | 241 | 7/8-14 | **IM-CVF** | MF72 |
| | 10 | 3500 | 38 | 241 | 7/8-14 | **DE-CVF** | MF74 |

## TYPICAL SCHEMATIC

Typical application for the CVF is to prevent cylinder free fall in the event of a hose or plumbing failure. The valve is usually mounted directly in the bottom of the cylinder, and sized 1-2 GPM higher than the normal lowering speed. The valve will not re-open until pressure is bled off of port #1.

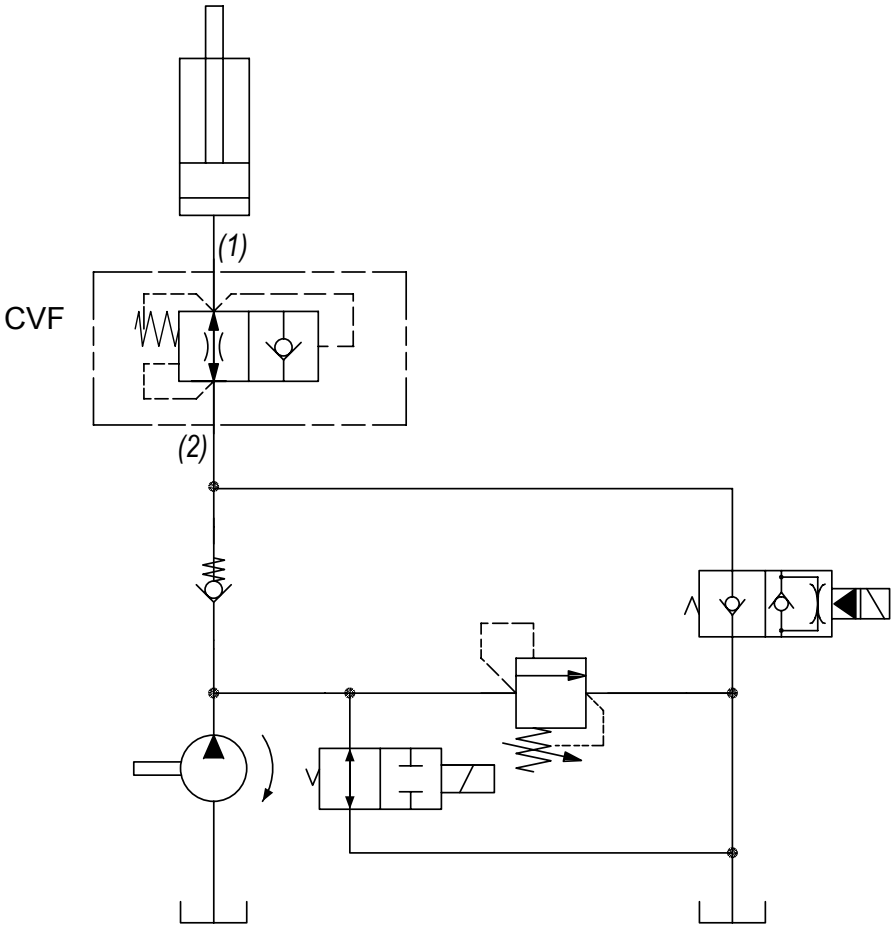


**WARNING:** *the specifications/application data shown in our catalogs and data sheets are intended only as a general guide for the product described (herein). Any specific application should not be undertaken without independent study, evaluation, and testing for suitability.*

## IM-CVF INLINE VELOCITY FUSE

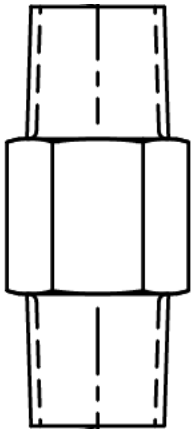

### DESCRIPTION

3/8 NPTF thread, inline velocity fuse.

### OPERATION

The IM-CVF allows flow to pass between (1) and (2). When oil velocity from (1) to (2) exceeds the flow setting, the valve shifts and blocks flow from (1) to (2).

### HYDRAULIC SYMBOL

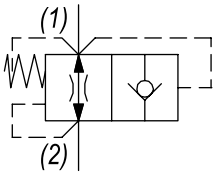


### PERFORMANCE

Actual Test Data (Cartridge Only)

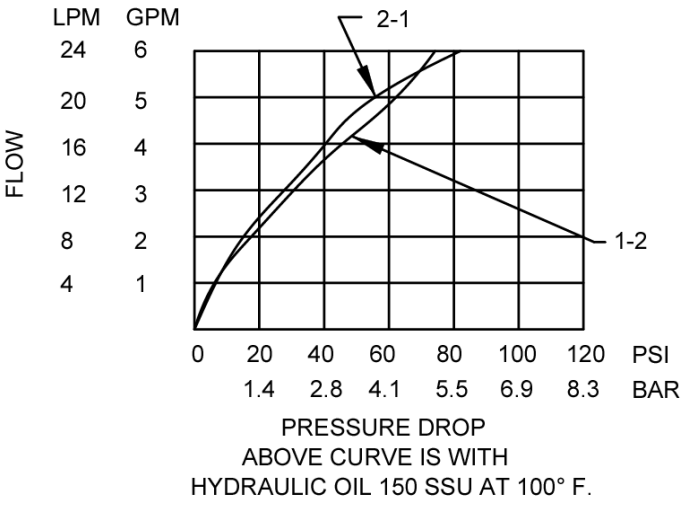


PRESSURE DROP
ABOVE CURVE IS WITH
HYDRAULIC OIL 150 SSU AT 100° F.

### VALVE SPECIFICATIONS - IM-CVF 11

| | |
|---|---|
| Nominal Flow Max | 6 GPM (23 LPM) |
| Rated Operating Pressure | 3500 PSI (241 bar) |
| Typical Internal Leakage (150 SSU) | 0-5 drops/min |
| Viscosity Range | 36 to 3000 SSU (3 to 647 cSt) |
| Filtration | ISO 18/16/13 |
| Media Operating Temp. Range | -40° to 250°F (-40° to 120°C) |
| Weight | .18 lbs (.08 kg) |
| Operating Fluid Media | General Purpose Hydraulic Fluid |

### VALVE SPECIFICATIONS - IM-CVF 13

| | |
|---|---|
| Nominal Flow Max | 6 GPM (23 LPM) |
| Rated Operating Pressure | 3000 PSI (207 bar) |
| Typical Internal Leakage (150 SSU) | 0-5 drops/min |
| Viscosity Range | 36 to 3000 SSU (3 to 647 cSt) |
| Filtration | ISO 18/16/13 |
| Media Operating Temp. Range | -40° to 250°F (-40° to 120°C) |
| Weight | .16 lbs (.07 kg) |
| Operating Fluid Media | General Purpose Hydraulic Fluid |

**WARNING:** *the specifications/application data shown in our catalogs and data sheets are intended only as a general guide for the product described (herein). Any specific application should not be undertaken without independent study, evaluation, and testing for suitability.*



Via Malavolti, 36 - 41122 Modena - ITALY - Phone +39 (059) 254895 - Fax +39 (059) 253512 - mail: tecnord@tecnord.com - **www.tecnord.com**

## DIMENSIONS

**IM-CVF 11**

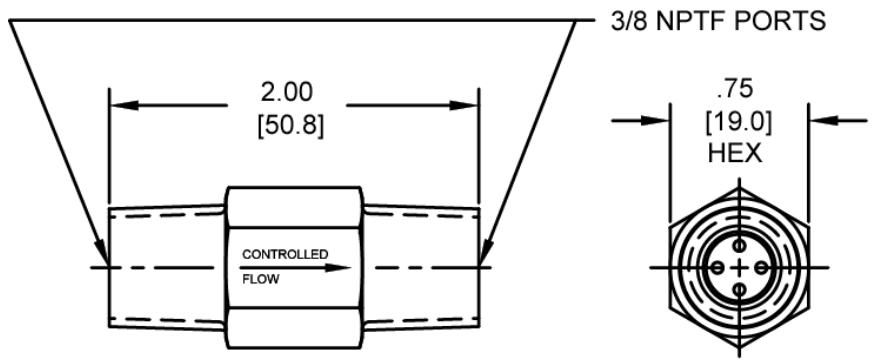


**IM-CVF 13**

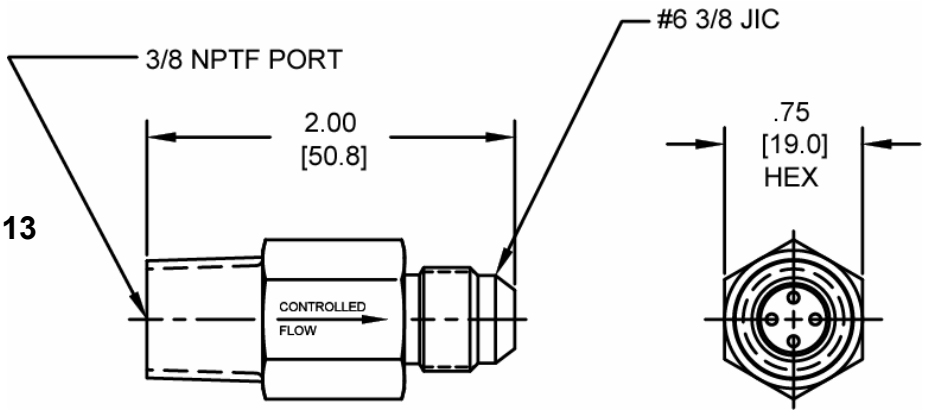


## ORDERING INFORMATION

**DE-CVF – _____ – _____ –**

| | | FLOW SETTINGS |
|---|---|---|
| **11** | **01.0** | 1 PSI |
| **13** | **02.0** | 2 PSI |
| | **03.0** | 3 PSI |
| | **04.0** | 4 PSI |
| | **05.0** | 5 PSI |
| | **06.0** | 6 PSI |

**WARNING:** *the specifications/application data shown in our catalogs and data sheets are intended only as a general guide for the product described (herein). Any specific application should not be undertaken without independent study, evaluation, and testing for suitability.*

W 50/ 2022

Via Malavolti, 36 - 41122 Modena - ITALY - Phone +39 (059) 254895 - Fax +39 (059) 253512 - mail: tecnord@tecnord.com - **www.tecnord.com**

## DE-CVF VELOCITY FUSE

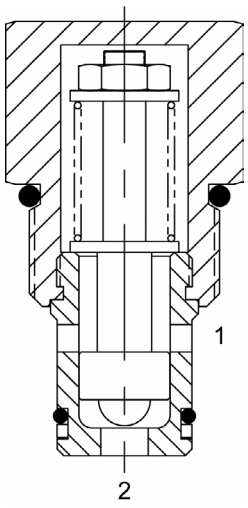


### DESCRIPTION

10 size, 7/8-14 thread, “Delta” series, velocity fuse valve.

### OPERATION

The DE-CVF allows flow to pass from (1) to (2). When velocity exceeds the flow setting the valve shifts and blocks flow from (1) to (2). Valve acts like a fixed orifice when passing flow from (2) to (1).

### FEATURES

- Hardened parts for long life.
- Industry common cavity.

*Curves identify pressure drop in port (2) to (1) direction (non-fuse). Fuse pressure drop is similar at fuse flow, until fuse takes effect (~75-100 PSID).*

### HYDRAULIC SYMBOL

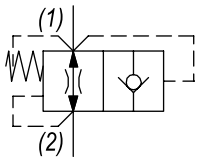


### VALVE SPECIFICATIONS

| | |
|---|---|
| Nominal Flow | 10 GPM (38 LPM) |
| Rated Operating Pressure | 3500 PSI (241 bar) |
| Viscosity Range | 36 to 3000 SSU (3 to 647 cSt) |
| Filtration | ISO 18/16/13 |
| Media Operating Temp. Range | -40° to 250°F (-40° to 120°C) |
| Weight | .25 lbs (.11 kg) |
| Operating Fluid Media | General Purpose Hydraulic Fluid |
| Cartridge Torque Requirements | 30 ft-lbs (40.6 Nm) |
| Cavity | DELTA 2W |
| Cavity Form Tool (Finishing) | 40500000 |
| Seal Kit | 21191200 |

### PERFORMANCE

Actual Test Data (Cartridge Only)

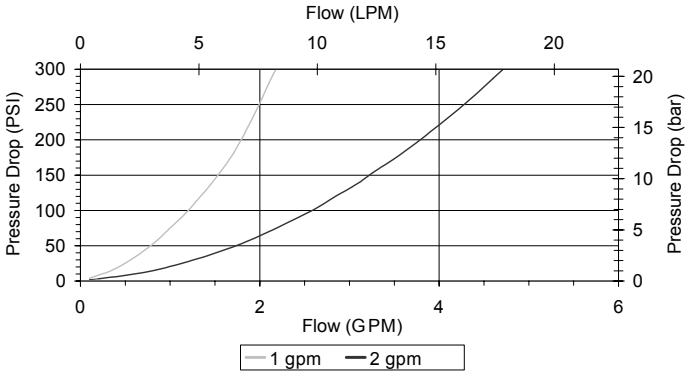


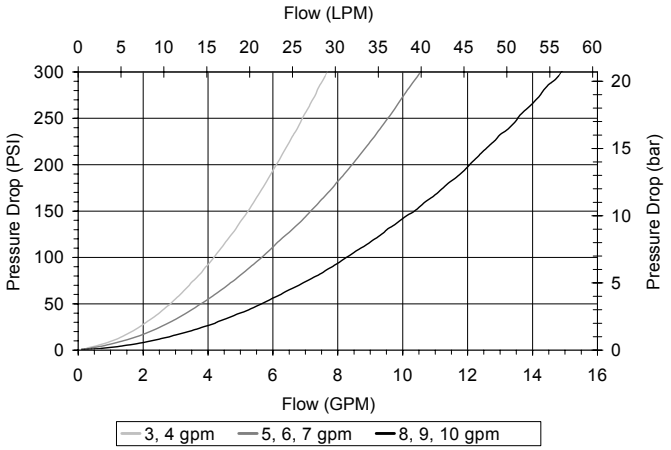


**WARNING:** *the specifications/application data shown in our catalogs and data sheets are intended only as a general guide for the product described (herein). Any specific application should not be undertaken without independent study, evaluation, and testing for suitability.*



Via Malavolti, 36 - 41122 Modena - ITALY - Phone +39 (059) 254895 - Fax +39 (059) 253512 - mail: tecnord@tecnord.com - **www.tecnord.com**

## DIMENSIONS

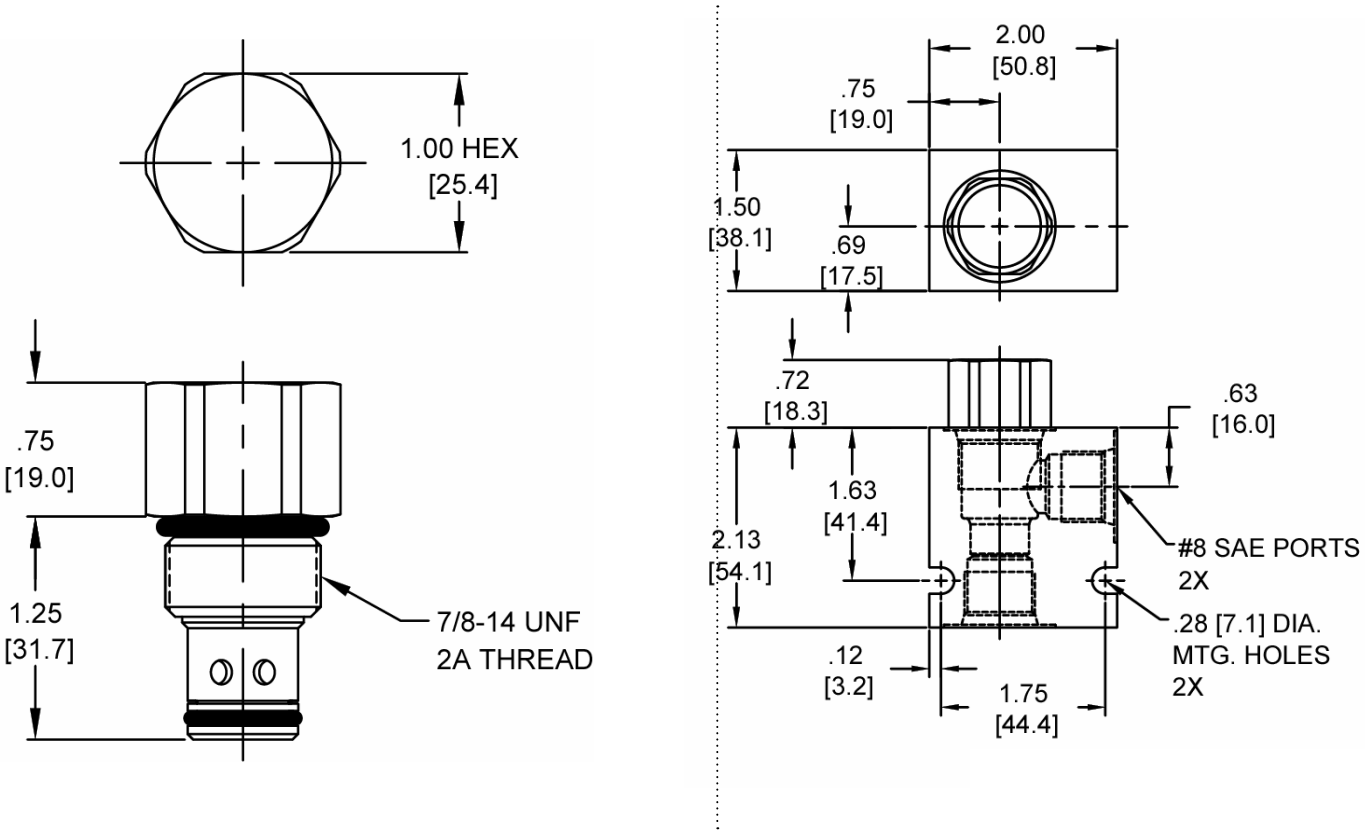


*Body Weight: .47 lbs (.21 kg)*

## ORDERING INFORMATION

**DE-CVF** – ____ – ____ – ____

**OPTIONS**

| | |
|---|---|
| Buna Standard | **00** |
| Viton Standard | **V0** |

**FLOW SETTING**

| | |
|---|---|
| **01.0** | 1 GPM |
| **02.0** | 2 GPM |
| **03.0** | 3 GPM |
| **04.0** | 4 GPM |
| **05.0** | 5 GPM |
| **06.0** | 6 GPM |
| **07.0** | 7 GPM |
| **08.0** | 8 GPM |
| **09.0** | 9 GPM |
| **10.0** | 10 GPM |
| | ± 15% |

**BODIES**

| | |
|---|---|
| **Blank** | Without Body |
| **N** | 3/8" NPTF Ports |
| **S** | #8 SAE Ports |

W 50/ 2022

**WARNING:** *the specifications/application data shown in our catalogs and data sheets are intended only as a general guide for the product described (herein). Any specific application should not be undertaken without independent study, evaluation, and testing for suitability.*

**WARNING:** *the specifications/application data shown in our catalogs and data sheets are intended only as a general guide for the product described (herein). Any specific application should not be undertaken without independent study, evaluation, and testing for suitability.*



Via Malavolti, 36 - 41122 Modena - ITALY - Phone +39 (059) 254895 - Fax +39 (059) 253512 - mail: tecnord@tecnord.com - **www.tecnord.com**

## FLOW DIVIDER/COMBINER VALVES

| | GPM | PSI | LPM | BAR | CAVITY | MODEL | PAGE |
|---|---|---|---|---|---|---|---|
| 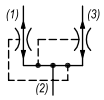 | 12 | 3500 | 45 | 241 | 7/8-14 | **DG-FDA** | MF78 |
| | 40 | 3500 | 151 | 241 | 1 5/16-12 | **SN-FDA** | MF80 |
| 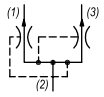 | 12 | 3500 | 45 | 241 | 7/8-14 | **DG-FDB** | MF82 |
| 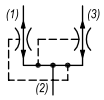 | 12 | 3500 | 45 | 241 | 7/8-14 | **DG-FDH** | MF84 |
| 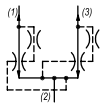 | 12 | 3500 | 45 | 241 | 7/8-14 | **DG-FDT** | MF86 |

## TYPICAL SCHEMATIC

Typical application for the FDA and FDH is to synchronize two independent cylinders or hydraulic motors in both directions. The FDB is a flow divider only. It cannot be used in combine mode.

Typical application for the FDT is to provide positive traction for vehicle drive systems. If one leg loses load, the valve insures flow to the other leg.

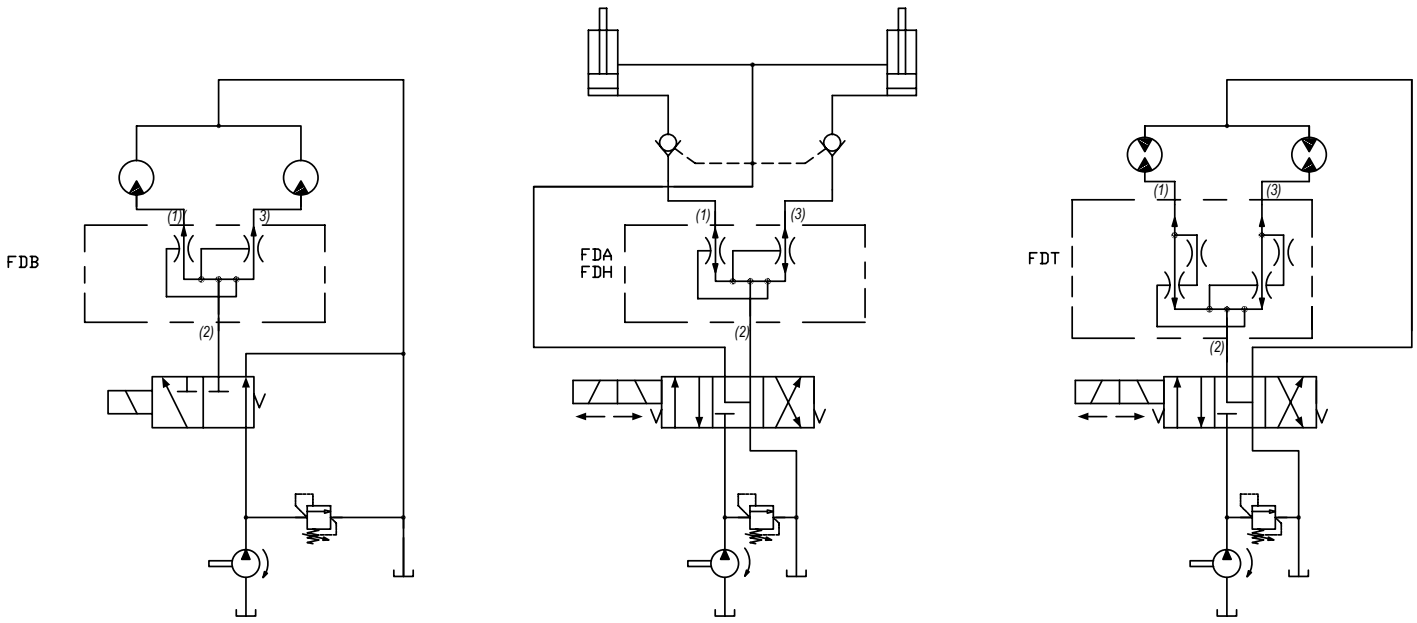


**WARNING:** *the specifications/application data shown in our catalogs and data sheets are intended only as a general guide for the product described (herein). Any specific application should not be undertaken without independent study, evaluation, and testing for suitability.*



Via Malavolti, 36 - 41122 Modena - ITALY - Phone +39 (059) 254895 - Fax +39 (059) 253512 - mail: tecnord@tecnord.com - **www.tecnord.com**

## DG-FDA FLOW DIVIDER / COMBINER VALVE, SPOOL TYPE

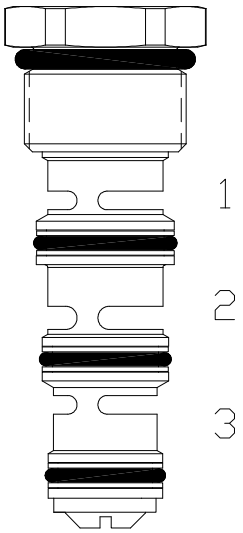


### DESCRIPTION

10 size, 7/8-14 thread “Delta Series”, spool type, flow divider/combiner.

### OPERATION

In the dividing mode, the DG-FDA will divert input flow from port (2) to ports (3) and (1), based on the ratio specified, regardless of operating pressure. The DG-FDA will combine input flows from ports (3) and (1), to port (2) by the same ratio. Should circuit operation result in a blockage of either (3) or (1), the opposite port may also close under certain conditions. Should this potential exist, consult the factory.

### FEATURES

- Hardened parts for long life.
- Industry common cavity.

*DO NOT EXCEED MAXIMUM FLOW PER MODEL*
*For higher accuracy flow ratio, use DG-FDH.*

### HYDRAULIC SYMBOL

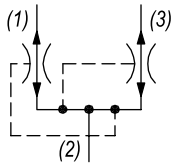


### PERFORMANCE

Actual Test Data (Cartridge Only)

### VALVE SPECIFICATIONS

| | |
|---|---|
| Maximum Flow | 12 GPM (45 LPM) |
| Accuracy on Flow Splits | ±10% of Max Rated Inlet Flow |
| Maximum Operating Pressure | 3500 PSI (241 bar) |
| Viscosity Range | 36 to 3000 SSU (3 to 647 cSt) |
| Filtration | ISO 18/16/13 |
| Media Operating Temp. Range | -40° to 250°F (-40° to 120°C) |
| Weight | .21 lbs (.10 kg) |
| Operating Fluid Media | General Purpose Hydraulic Fluid |
| Cartridge Torque Requirements | 30 ft-lbs (40.6 Nm) |
| Cavity | DELTA 4W |
| Cavity Form Tool (Finishing) | 40500002 |
| Seal Kit | 21191214 |

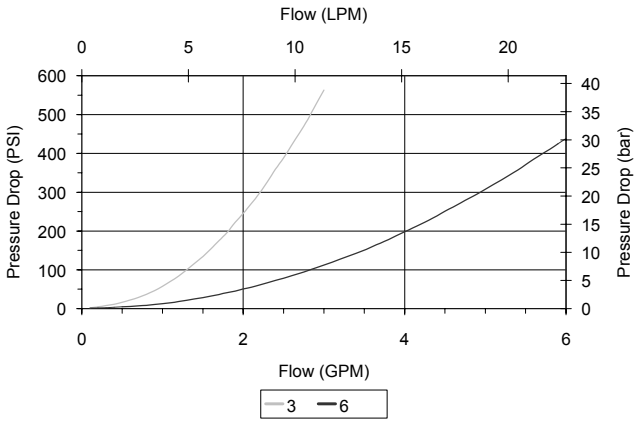


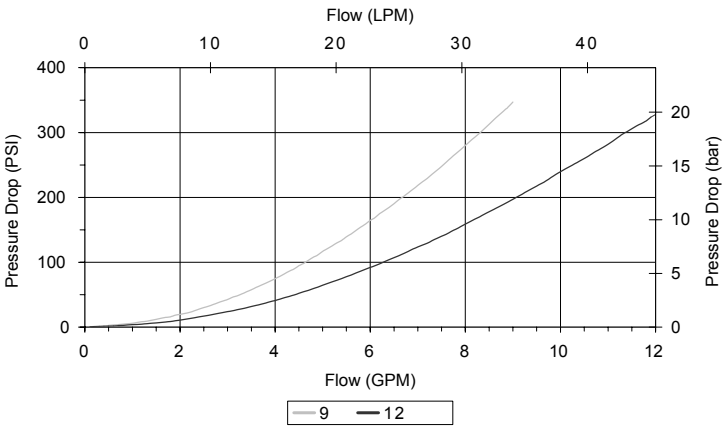


**WARNING:** *the specifications/application data shown in our catalogs and data sheets are intended only as a general guide for the product described (herein). Any specific application should not be undertaken without independent study, evaluation, and testing for suitability.*



Via Malavolti, 36 - 41122 Modena - ITALY - Phone +39 (059) 254895 - Fax +39 (059) 253512 - mail: tecnord@tecnord.com - **www.tecnord.com**

## DIMENSIONS

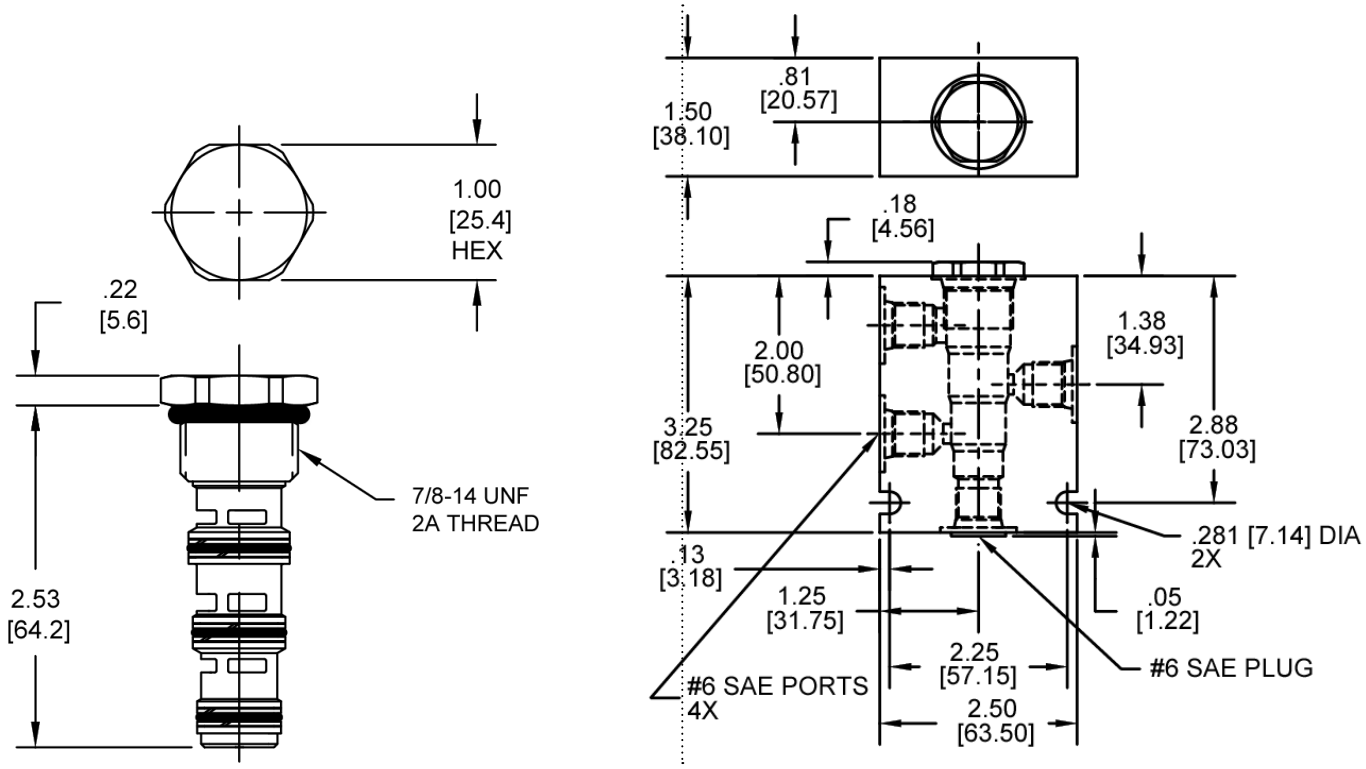


*Body Weight: .99 lbs (.45 kg)*

## ORDERING INFORMATION

**DG-FDA – ____ – ____ – ____ – ____**

**OPTIONS**

| | |
|---|---|
| Buna Standard | **00** |
| Viton Standard | **V0** |

**BODIES**

| | |
|---|---|
| **Blank** | Without Body |
| **N** | 1/4 NPT Ports |
| **S** | #6 SAE Ports |

**Note: must use 4-way body**

**SPLITS**

| #1 | #3 | |
|---|---|---|
| 14-86 | **14** | |
| 20-80 | **20** | |
| 28-72 | **28** | |
| 30-70 | **30** | |
| 36-64 | **36** | |
| 40-60 | **40** | |
| 50-50 | **50** | |
| 60-40 | **60** | |
| 64-36 | **64** | |
| 70-30 | **70** | |
| 72-28 | **72** | |
| 80-20 | **80** | |
| 86-14 | **86** | |

**Consult factory for additional splits**

**INLET FLOW**

| | |
|---|---|
| **03** | 2-3 GPM (50 only) |
| **06** | 3-6 GPM (50 only) |
| **09** | 6-9 GPM (50 only) |
| **12** | 9-12 GPM (50 only) |
| ** | **All non 50-50 split valves (see chart below for flow ratings)** |

| | |
|---|---|
| **04** | **06** |
| **06** | **09** |
| **07** | **12** |
| **09** | **15** |
| **10** | **18** |

| Maximum inlet flow for non 50-50 split valves | |
|---|---|
| **Model code** | **Maximum inlet flow** |
| 30-70, 70-30 | 4.0 GPM |
| 20-80, 80-20 | 6.0 GPM |
| 14-86, 36-64, 64-36, 86-14 | 7.0 GPM |
| 28-72, 72-28 | 9.0 GPM |
| 40-60, 60-40 | 10.0 GPM |

**WARNING:** *the specifications/application data shown in our catalogs and data sheets are intended only as a general guide for the product described (herein). Any specific application should not be undertaken without independent study, evaluation, and testing for suitability.*



Via Malavolti, 36 - 41122 Modena - ITALY - Phone +39 (059) 254895 - Fax +39 (059) 253512 - mail: tecnord@tecnord.com - **www.tecnord.com**

## SN-FDA FLOW DIVIDER / COMBINER VALVE, SPOOL TYPE

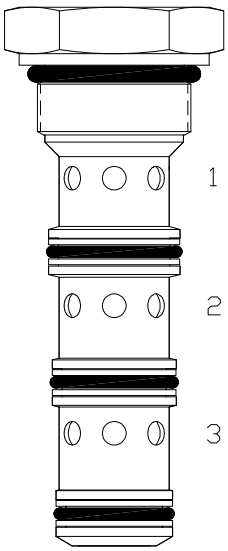


### DESCRIPTION

16 size, 1 5/16-12 thread “Super Series,” spool-type flow divider/combiner valve.

### OPERATION

In the dividing mode, the SN-FDA will divert input flow from port (2) to ports (3) and (1), based on the ratio specified, regardless of operating pressure. The SN-FDA will combine input flows from ports (3) and (1), to port (2) by same ratio. Should circuit operation result in a blockage of either (3) or (1), the opposite port may also close under certain conditions. Should this potential exist, consult the factory.

### FEATURES

- Hardened parts for long life.
- Industry common cavity.

### HYDRAULIC SYMBOL

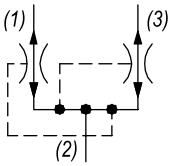


*DO NOT EXCEED MAXIMUM FLOW PER MODEL.*

### PERFORMANCE

Actual Test Data (Cartridge Only)

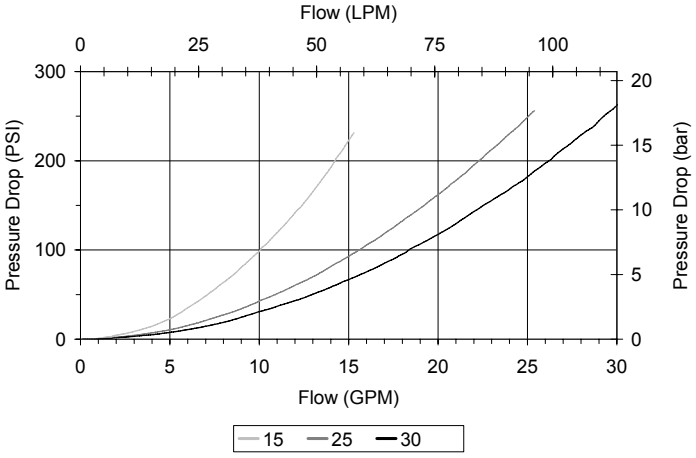


### VALVE SPECIFICATIONS

| | |
|---|---|
| Nominal Flow | 40 GPM (151 LPM) |
| Accuracy on Flow Splits | ±10% of Max Rated Inlet Flow |
| Maximum Operating Pressure | 3500 PSI (241 bar) |
| Viscosity Range | 36 to 3000 SSU (3 to 647 cSt) |
| Filtration | ISO 18/16/13 |
| Media Operating Temp. Range | -40° to 250°F (-40° to 120°C) |
| Weight | .95 lbs (.43 kg) |
| Operating Fluid Media | General Purpose Hydraulic Fluid |
| Cartridge Torque Requirements | 90 ft-lbs (122 Nm) |
| Cavity | SUPER 4W |
| Cavity Form Tool (Finishing) | 40500019 |
| Seal Kit | 21191413 |

**WARNING:** *the specifications/application data shown in our catalogs and data sheets are intended only as a general guide for the product described (herein). Any specific application should not be undertaken without independent study, evaluation, and testing for suitability.*



Via Malavolti, 36 - 41122 Modena - ITALY - Phone +39 (059) 254895 - Fax +39 (059) 253512 - mail: tecnord@tecnord.com - **www.tecnord.com**

## DIMENSIONS

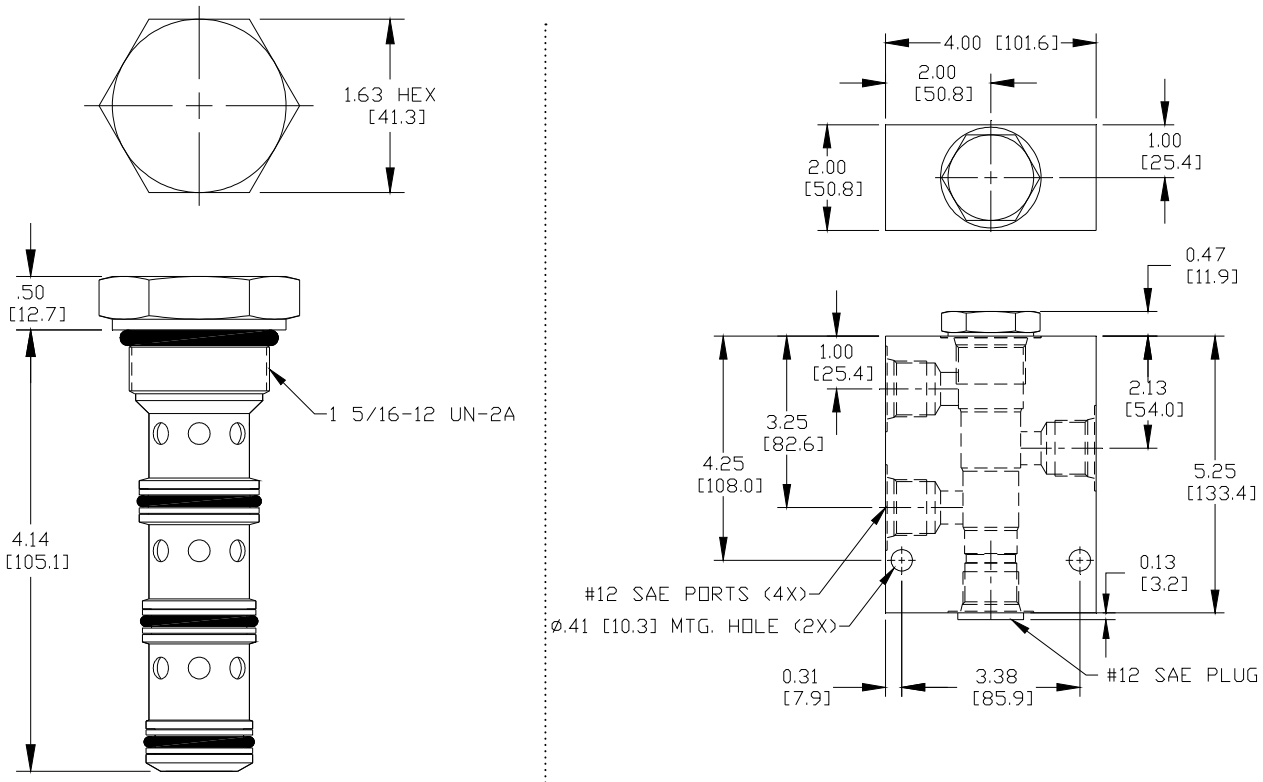


*Body Weight: 3.21 lbs (1.46 kg)*

## ORDERING INFORMATION

**SN-FDA – ____ – ____ – ____ – ____**

**OPTIONS**

| | |
|---|---|
| Buna Standard | **00** |
| Viton Standard | **V0** |

**SPLITS**

| #1 | #3 |
|---|---|
| 25-75 | **25** |
| 35-65 | **35** |
| 40-60 | **40** |
| 50-50 | **50** |
| 60-40 | **60** |
| 65-35 | **65** |
| 75-25 | **75** |

**Consult factory for additional splits**

**INLET FLOW**

| | |
|---|---|
| **15** | 8-15 GPM |
| **25** | 15-25 GPM |
| **30** | 20-30 GPM |
| **40** | 30-40 GPM ***Available as a 50-50 split only** |

**All non 50-50 split valves (see chart below for flow ratings)**

| | Maximum inlet flow for non 50-50 split valves | |
|---|---|---|
| | **Model code** | **Maximum inlet flow** |
| **15** | 35-65, 65-35 | 15.0 GPM |
| **25** | 25-75, 40-60, 60-40, 75-25 | 25.0 GPM |
| **30** | 35-65, 65-35 | 30.0 GPM |

**BODIES**

| | |
|---|---|
| **Blank** | Without Body |
| **S** | #12 SAE Ports |

**Note: must use 4-way body**

**WARNING:** *the specifications/application data shown in our catalogs and data sheets are intended only as a general guide for the product described (herein). Any specific application should not be undertaken without independent study, evaluation, and testing for suitability.*



Via Malavolti, 36 - 41122 Modena - ITALY - Phone +39 (059) 254895 - Fax +39 (059) 253512 - mail: tecnord@tecnord.com - **www.tecnord.com**

## DG-FDB FLOW DIVIDER VALVE, SPOOL TYPE

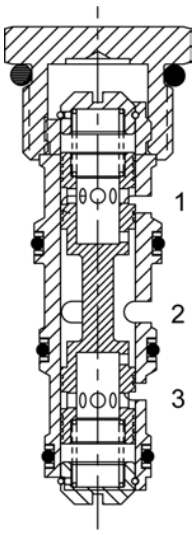


### DESCRIPTION

10 size, 7/8-14 thread “Delta Series”, spool type, flow divider.

### OPERATION

The DG-FDB will divert input flow from port (2) to ports (3) and (1), based on the ratio specified, regardless of operating pressure. Should circuit operation result in a blockage of either (3) or (1), the opposite port may also close under certain conditions. Should this potential exist, consult the factory.

### FEATURES

- Hardened parts for long life.
- Industry common cavity.

*DO NOT EXCEED MAXIMUM FLOW PER MODEL.*

### HYDRAULIC SYMBOL

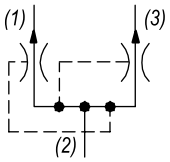


### PERFORMANCE

Actual Test Data (Cartridge Only)

### VALVE SPECIFICATIONS

| | |
|---|---|
| Maximum Flow | 12 GPM (45 LPM) |
| Accuracy on Flow Splits | ±10% of Max Rated Inlet Flow |
| Maximum Operating Pressure | 3500 PSI (241 bar) |
| Viscosity Range | 36 to 3000 SSU (3 to 647 cSt) |
| Filtration | ISO 18/16/13 |
| Media Operating Temp. Range | -40° to 250°F (-40° to 120°C) |
| Weight | .21 lbs (.10 kg) |
| Operating Fluid Media | General Purpose Hydraulic Fluid |
| Cartridge Torque Requirements | 30 ft-lbs (40.6 Nm) |
| Cavity | DELTA 4W |
| Cavity Form Tool (Finishing) | 40500002 |
| Seal Kit | 21191214 |

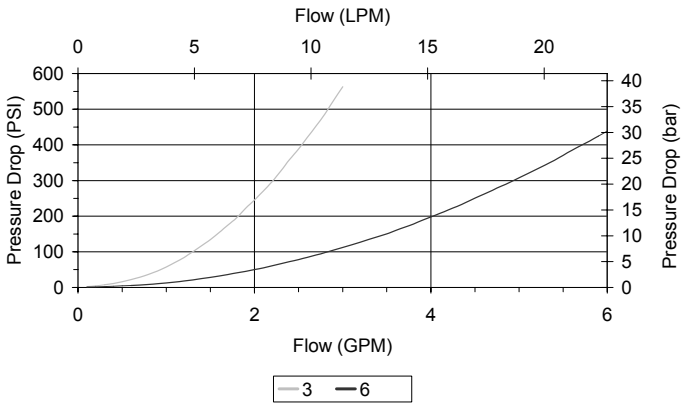


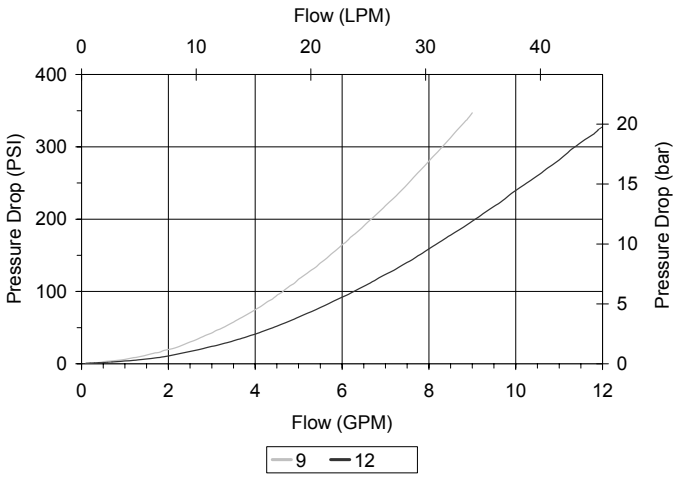


**WARNING:** *the specifications/application data shown in our catalogs and data sheets are intended only as a general guide for the product described (herein). Any specific application should not be undertaken without independent study, evaluation, and testing for suitability.*

## DIMENSIONS

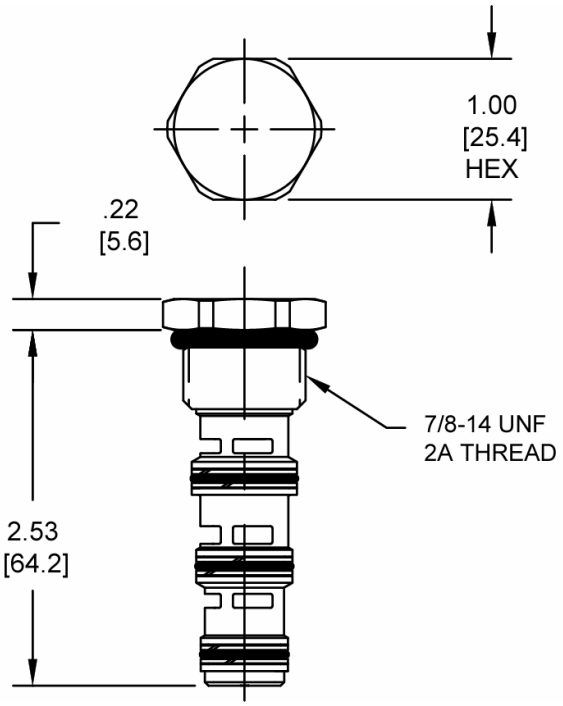


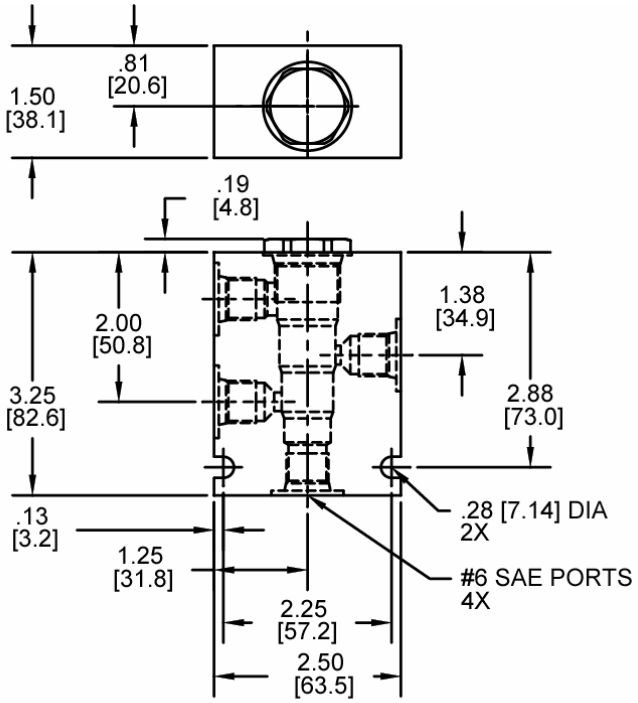


*Body Weight: .99 lbs (.45 kg)*

## ORDERING INFORMATION

**DG-FDB – ____ – ____ – ____ – ____**

**OPTIONS**
Buna Standard **00**
Viton Standard **V0**

**SPLITS**
50-50 **50**
**Consult factory for splits other then 50-50**

**INLET FLOW**
**03** 2-3 GPM
**06** 3-6 GPM
**09** 6-9 GPM
**12** 9-12 GPM

**BODIES**
**Blank** Without Body
**N** 1/4" NPT Ports
**S** #6 SAE Ports
**Note: must use 4-way body**

**WARNING:** *the specifications/application data shown in our catalogs and data sheets are intended only as a general guide for the product described (herein). Any specific application should not be undertaken without independent study, evaluation, and testing for suitability.*



Via Malavolti, 36 - 41122 Modena - ITALY - Phone +39 (059) 254895 - Fax +39 (059) 253512 - mail: tecnord@tecnord.com - **www.tecnord.com**

## DG-FDH FLOW DIVIDER / COMBINER VALVE, SPOOL TYPE

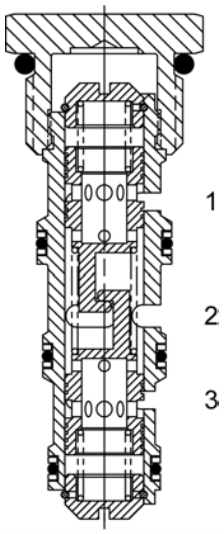


### DESCRIPTION

"High Accuracy" 10 size, 7/8-14 thread "Delta Series", spool type, flow divider/combiner.

### OPERATION

In the dividing mode, the DG-FDH will divert input flow from port (2) to ports (3) and (1), based on the ratio specified with a high degree of accuracy, regardless of operating pressure. The DG-FDH will combine input flows from ports (3) and (1), to port (2) by the same ratio. Should circuit operation result in a blockage of either (3) or (1), the opposite port may also close under certain conditions. Should this potential exist, consult the factory.

### FEATURES

- Hardened parts for long life.
- Industry common cavity.

*DO NOT EXCEED MAXIMUM FLOW PER MODEL. The DG-FDH should be considered if the DG-FDA does not provide the required accuracy.*

### HYDRAULIC SYMBOL

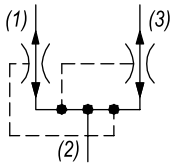


### PERFORMANCE

Actual Test Data (Cartridge Only)

### VALVE SPECIFICATIONS

| | |
|---|---|
| Maximum Flow | 12 GPM (45 LPM) |
| Accuracy on Flow Splits | ±4% of Max Rated Inlet Flow |
| Maximum Operating Pressure | 3500 PSI (241 bar) |
| Viscosity Range | 36 to 3000 SSU (3 to 647 cSt) |
| Filtration | ISO 18/16/13 |
| Media Operating Temp. Range | -40° to 250°F (-40° to 120°C) |
| Weight | .21 lbs (.10 kg) |
| Operating Fluid Media | General Purpose Hydraulic Fluid |
| Cartridge Torque Requirements | 30 ft-lbs (40.6 Nm) |
| Cavity | DELTA 4W |
| Cavity Form Tool (Finishing) | 40500002 |
| Seal Kit | 21191214 |

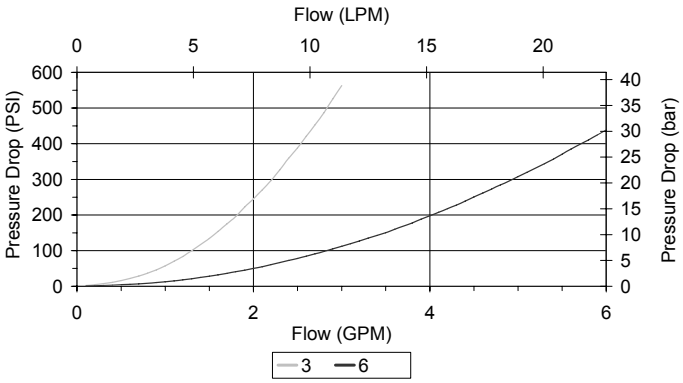


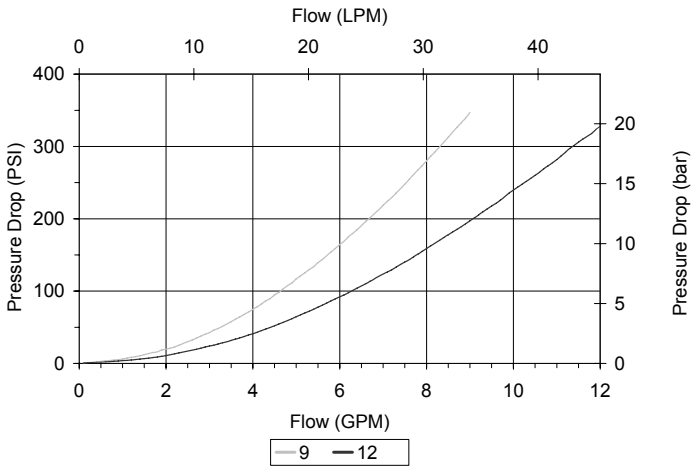


**WARNING:** *the specifications/application data shown in our catalogs and data sheets are intended only as a general guide for the product described (herein). Any specific application should not be undertaken without independent study, evaluation, and testing for suitability.*



Via Malavolti, 36 - 41122 Modena - ITALY - Phone +39 (059) 254895 - Fax +39 (059) 253512 - mail: tecnord@tecnord.com - **www.tecnord.com**

## DIMENSIONS

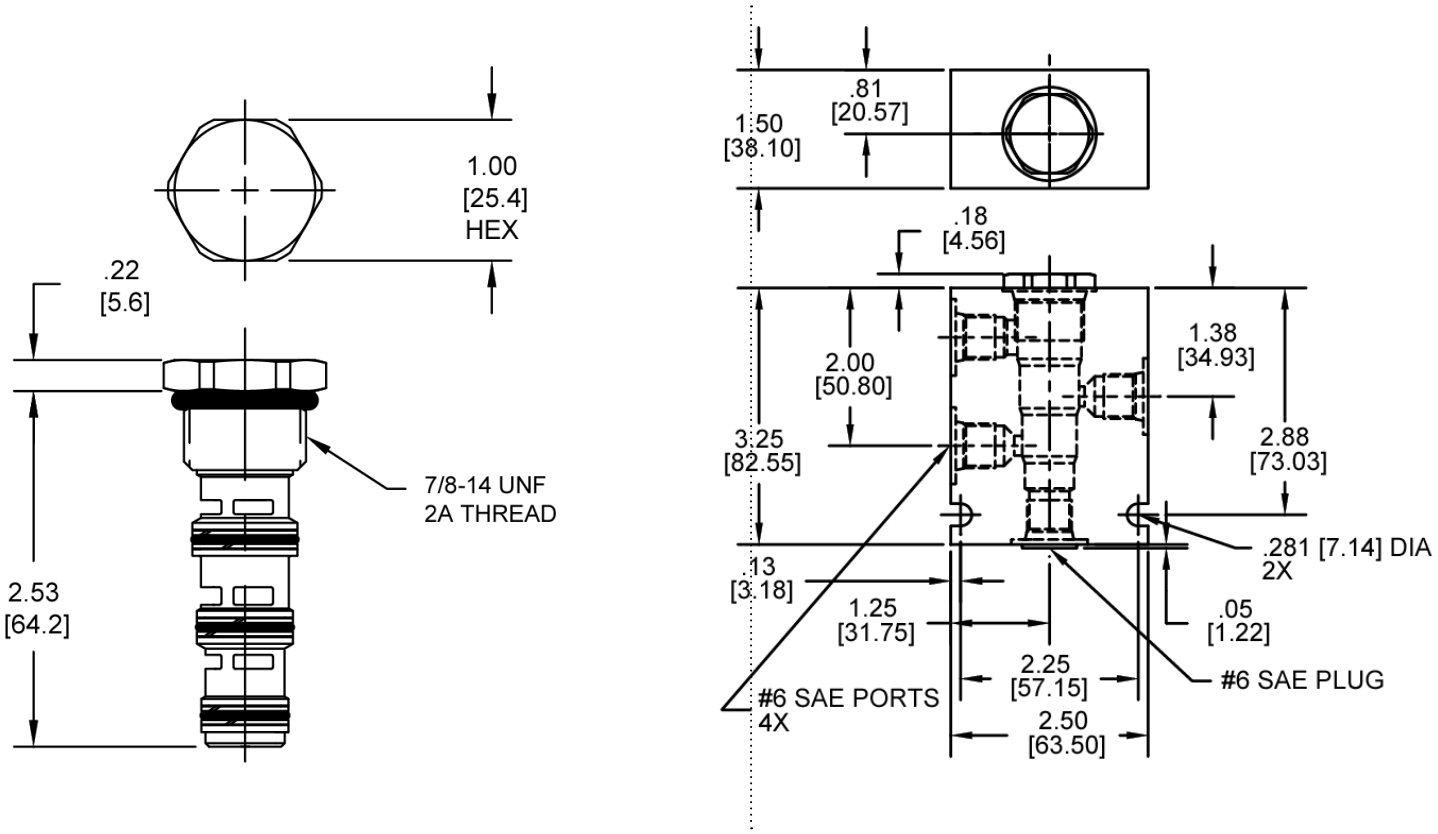


*Body Weight: .99 lbs (.45 kg)*

## ORDERING INFORMATION

**DG-FDH – ____ – ____ – ____ – ____**

**OPTIONS**
Buna Standard **00**
Viton Standard **V0**

**SPLITS**
50-50 **50**
**Consult factory for splits other then 50-50**

**INLET FLOW**
**03** 2-3 GPM
**06** 3-6 GPM
**09** 6-9 GPM
**12** 9-12 GPM

**BODIES**
**Blank** Without Body
**N** 1/4" NPT Ports
**S** #6 SAE Ports
**Note: must use 4-way body**

**WARNING:** *the specifications/application data shown in our catalogs and data sheets are intended only as a general guide for the product described (herein). Any specific application should not be undertaken without independent study, evaluation, and testing for suitability.*



Via Malavolti, 36 - 41122 Modena - ITALY - Phone +39 (059) 254895 - Fax +39 (059) 253512 - mail: tecnord@tecnord.com - **www.tecnord.com**

## DG-FDT FLOW DIVIDER / COMBINER VALVE, SPOOL TYPE

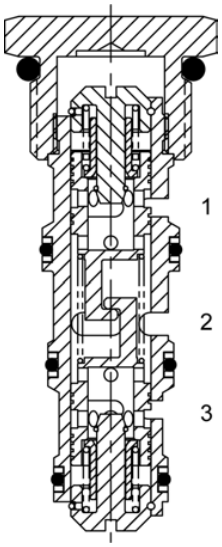


### DESCRIPTION

10 size, 7/8-14 thread “Delta Series”, spool type, flow divider/combiner, positive traction valve.

### OPERATION

In the dividing mode, the DG-FDT will divert input flow from port (2) to ports (3) and (1), based on the ratio specified, regardless of operating pressure. The DG-FDT will combine input flows from ports (3) and (1). Should circuit operation result in a blockage of either (3) or (1), the opposite port may also close under certain conditions. Should this potential exist, consult the factory.

### FEATURES

- Hardened parts for long life.
- Industry common cavity.

*DO NOT EXCEED MAXIMUM FLOW PER MODEL*
*Use where wheel slip (or “drag”) needs to be accomplished.*

*TRACTION FLOW W/1 LEG UNLOADED*
*2-3 GPM valve - 0.4 GPM*
*3-6 GPM valve - 0.7 GPM*
*6-9 GPM valve - 1.1 GPM*
*9-12 GPM valve - 1.5 GPM*

### HYDRAULIC SYMBOL

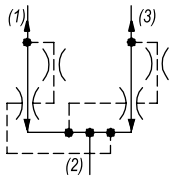


### VALVE SPECIFICATIONS

| | |
|---|---|
| Maximum Flow | 12 GPM (45 LPM) |
| Accuracy on Flow Splits | ±10% of Max Rated Inlet Flow |
| Maximum Operating Pressure | 3500 PSI (241 bar) |
| Viscosity Range | 36 to 3000 SSU (3 to 647 cSt) |
| Filtration | ISO 18/16/13 |
| Media Operating Temp. Range | -40° to 250°F (-40° to 120°C) |
| Weight | .22 lbs (.10 kg) |
| Operating Fluid Media | General Purpose Hydraulic Fluid |
| Cartridge Torque Requirements | 30 ft-lbs (40.6 Nm) |
| Cavity | DELTA 4W |
| Cavity Form Tool (Finishing) | 40500002 |
| Seal Kit | 21191214 |

### PERFORMANCE

Actual Test Data (Cartridge Only)

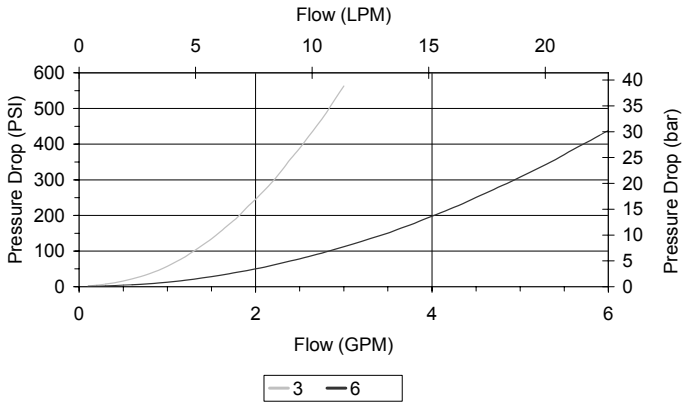


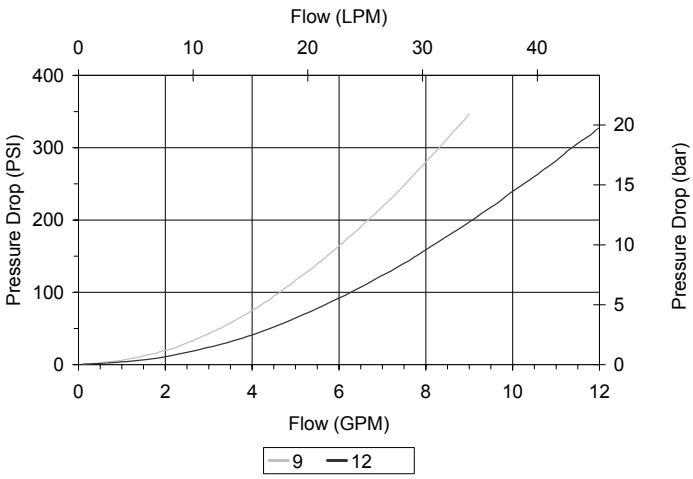


**WARNING:** *the specifications/application data shown in our catalogs and data sheets are intended only as a general guide for the product described (herein). Any specific application should not be undertaken without independent study, evaluation, and testing for suitability.*



Via Malavolti, 36 - 41122 Modena - ITALY - Phone +39 (059) 254895 - Fax +39 (059) 253512 - mail: tecnord@tecnord.com - **www.tecnord.com**

## DIMENSIONS

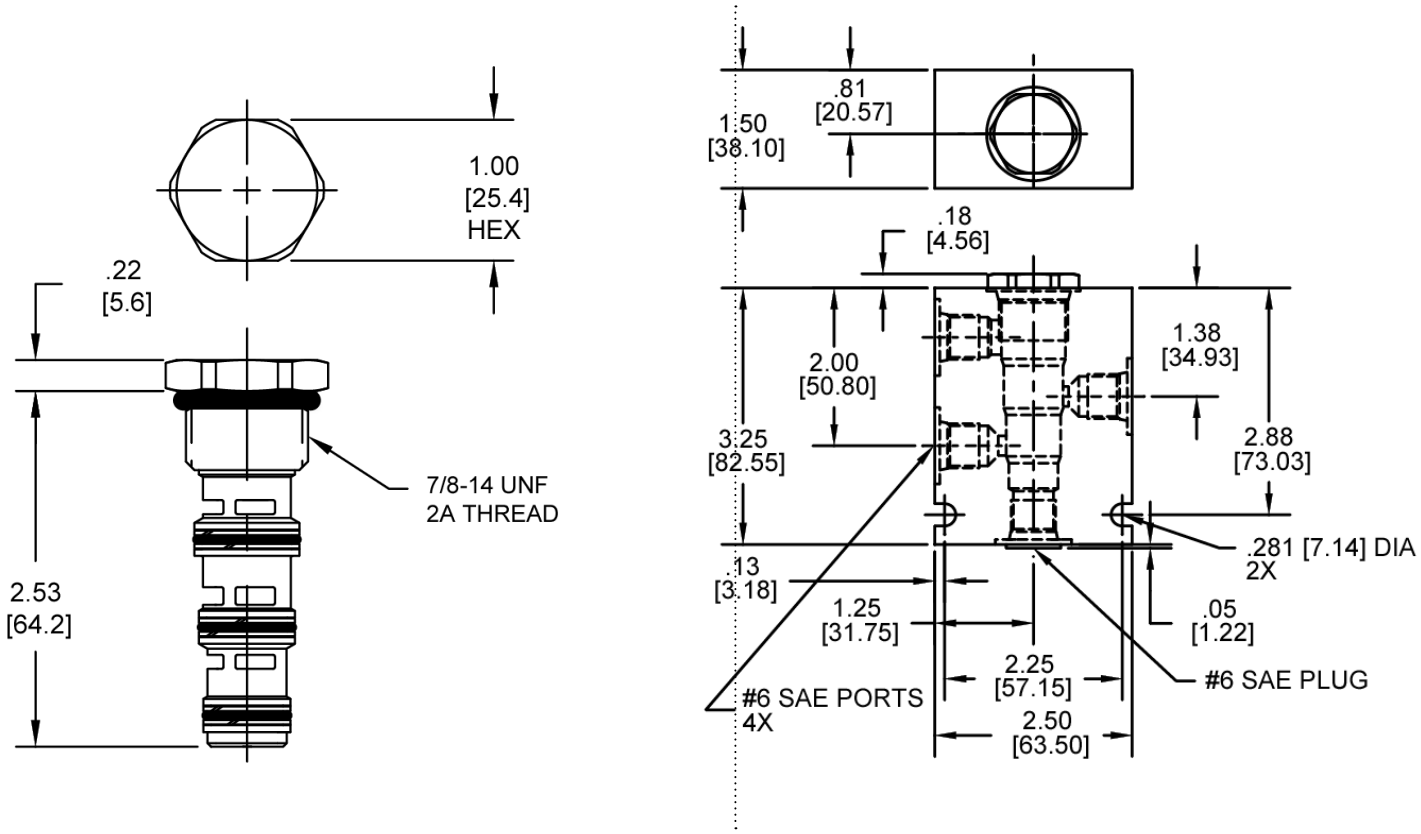


*Body Weight: .99 lbs (.45 kg)*

## ORDERING INFORMATION

**DG-FDT – ____ – ____ – ____ – ____**

**OPTIONS**
Buna Standard **00**
Viton Standard **V0**

**SPLITS**
50-50 **50**
**Consult factory for splits other then 50-50**

**INLET FLOW**
**03** 2-3 GPM
**06** 3-6 GPM
**09** 6-9 GPM
**12** 9-12 GPM

**BODIES**
**Blank** Without Body
**N** 1/4" NPT Ports
**S** #6 SAE Ports
**Note: must use 4-way body**

**WARNING:** *the specifications/application data shown in our catalogs and data sheets are intended only as a general guide for the product described (herein). Any specific application should not be undertaken without independent study, evaluation, and testing for suitability.*



Via Malavolti, 36 - 41122 Modena - ITALY - Phone +39 (059) 254895 - Fax +39 (059) 253512 - mail: tecnord@tecnord.com - **www.tecnord.com**

**WARNING:** *the specifications/application data shown in our catalogs and data sheets are intended only as a general guide for the product described (herein). Any specific application should not be undertaken without independent study, evaluation, and testing for suitability.*



Via Malavolti, 36 - 41122 Modena - ITALY - Phone +39 (059) 254895 - Fax +39 (059) 253512 - mail: tecnord@tecnord.com - **www.tecnord.com**

## LOGIC ELEMENTS

| | GPM | PSI | LPM | BAR | CAVITY | MODEL | PAGE |
|---|---|---|---|---|---|---|---|
| 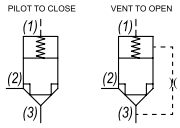 | 40 | 3500 | 151 | 241 | 1 5/16-12 | **SL-PLA** | MF90 |
| | 40 | 3500 | 151 | 241 | 1 5/16-12 | **SL-PLB** | MF92 |
| 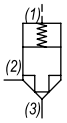 | 40 | 3500 | 151 | 241 | 1 5/16-12 | **SL-PLC** | MF94 |

## TYPICAL SCHEMATIC

Typical application for the PLA, PLB, and PLC is to provide the main stage of a high-flow capacity on/off function. A low flow solenoid valve is generally used to provide pilot control.
The PLA and PLB are intended for flow in one direction only, whereas the PLC can be used for bi-directional operation.
The differing pilot ratios between the three valves affect pressure drop versus flow, and **opening pressure versus pilot pressure**.
The differing pilot ratios between the three valves affect pressure drop versus flow, and **opening pressure as a function of pilot pressure**.

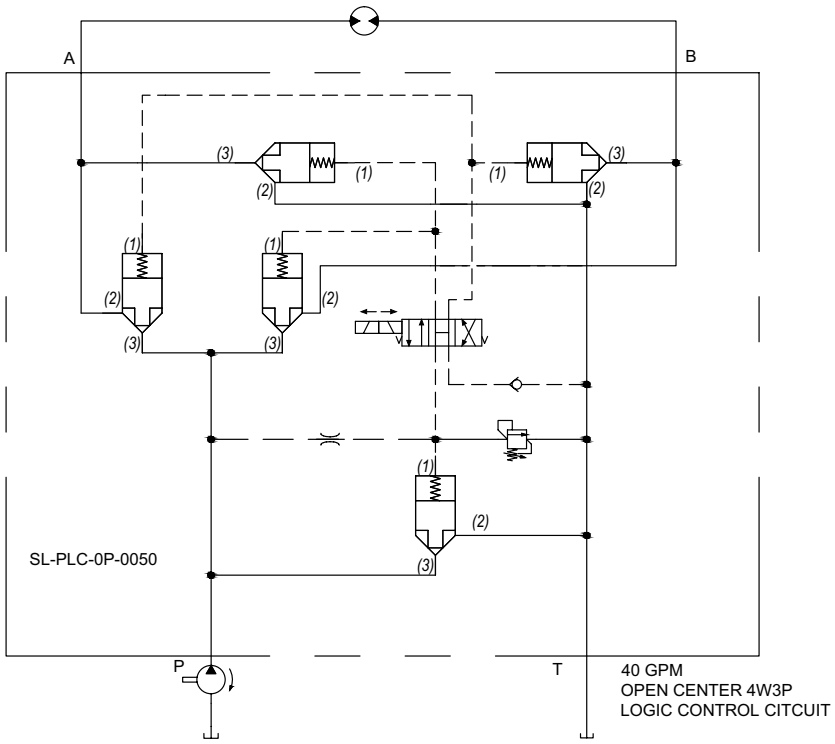


**WARNING:** *the specifications/application data shown in our catalogs and data sheets are intended only as a general guide for the product described (herein). Any specific application should not be undertaken without independent study, evaluation, and testing for suitability.*



Via Malavolti, 36 - 41122 Modena - ITALY - Phone +39 (059) 254895 - Fax +39 (059) 253512 - mail: tecnord@tecnord.com - **www.tecnord.com**

## SL-PLA SUPER SERIES, LOGIC VALVE

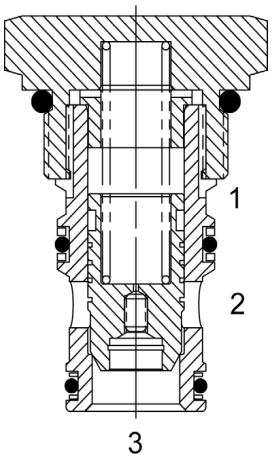


### DESCRIPTION

16 size, 1 5/16-12 thread, “Super” series, logic valve.

### OPERATION

The SL-PLA with an orifice between ports (3) and (1) maintains a constant flow rate from (3) regardless of load pressure changes in the system upstream of (3), or in the bypass leg at (2) as long as pressure at (2) is less than (1). Used for basic blocking applications.

### FEATURES

- Hardened parts for long life.
- Industry common cavity.

*For bidirectional applications see SL-PLC.*
*For metering see SLPCA or SL-PCB.*

### HYDRAULIC SYMBOL

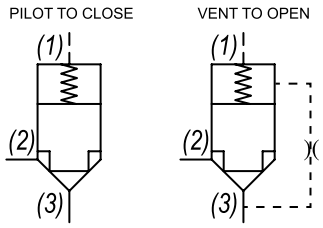


### PERFORMANCE

Actual Test Data (Cartridge Only)

### VALVE SPECIFICATIONS

| | |
|---|---|
| Nominal Flow | 40 GPM (151 LPM) |
| Rated Operating Pressure | 3500 PSI (241 bar) |
| Viscosity Range | 36 to 3000 SSU (3 to 647 cSt) |
| Filtration | ISO 18/16/13 |
| Media Operating Temp. Range | -40° to 250°F (-40° to 120°C) |
| Weight | .69 lbs (.31 kg) |
| Operating Fluid Media | General Purpose Hydraulic Fluid |
| Cartridge Torque Requirements | 90 ft-lbs (122 Nm) |
| Cavity | SUPER 3WS |
| Cavity Form Tool (Finishing) | 40500021 |
| Seal Kit | 21191409 |
| Seat Ratio | Area of the pilot is 1.2 times the area of the seat at Port (3) |

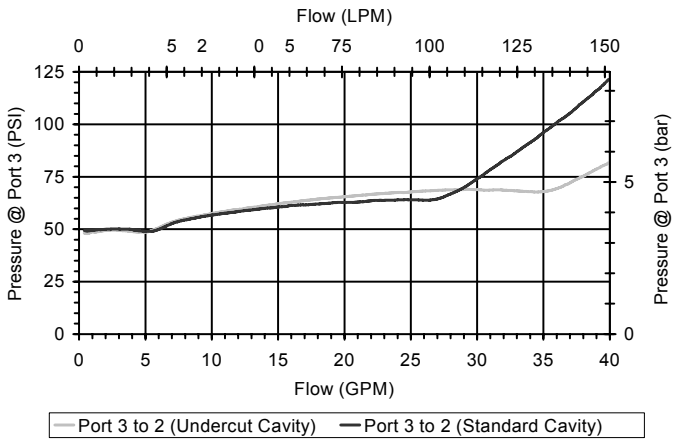


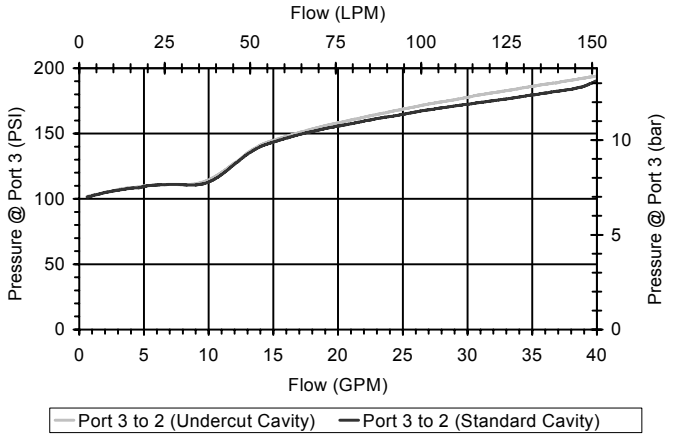


**WARNING:** *the specifications/application data shown in our catalogs and data sheets are intended only as a general guide for the product described (herein). Any specific application should not be undertaken without independent study, evaluation, and testing for suitability.*



Via Malavolti, 36 - 41122 Modena - ITALY - Phone +39 (059) 254895 - Fax +39 (059) 253512 - mail: tecnord@tecnord.com - **www.tecnord.com**

## DIMENSIONS

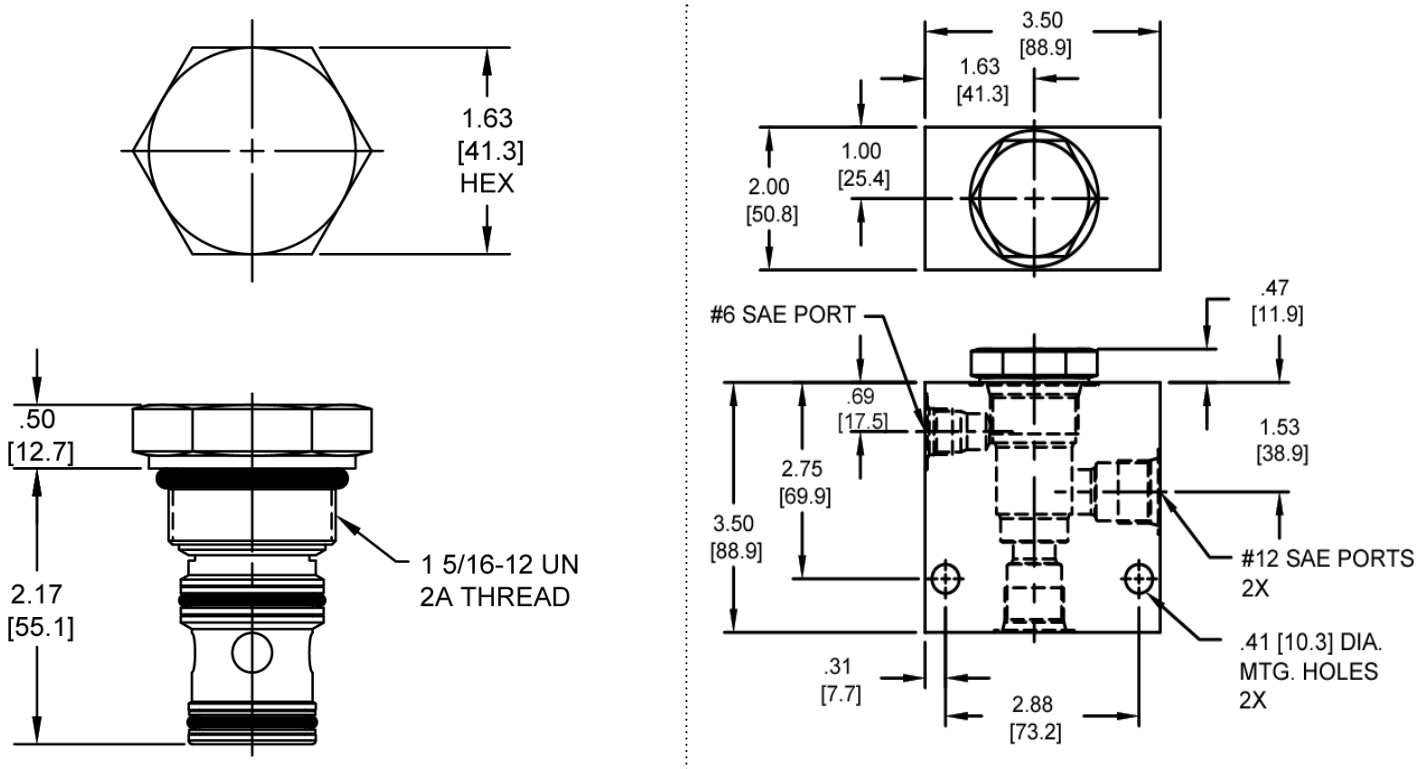


*Body Weight: 1.89 lbs (.86 kg)*

## ORDERING INFORMATION

**SL-PLA –** ____ **–** ____ **–** ____

**OPTIONS**

| | |
|---|---|
| Buna, Pilot to Close | **0P** |
| Viton, Pilot to Close | **VP** |
| Buna, Vent to Open | **0V** |
| Viton, Vent to Open | **VV** |
| Buna, Pilot to Close w/seals | **0B** |
| Viton, Pilot to Close w/seals | **VB** |
| Buna, Vent to Open w/seals | **0C** |
| Viton, Vent to Open w/seals | **VC** |

**PRESSURE SETTING**

| | |
|---|---|
| **0020** | 20 PSI |
| **0050** | 50 PSI |
| **0100** | 100 PSI |
| **0150** | 150 PSI |

**BODIES**

| | |
|---|---|
| **Blank** | Without Body |
| **S** | #12 SAE Ports |

**WARNING:** *the specifications/application data shown in our catalogs and data sheets are intended only as a general guide for the product described (herein). Any specific application should not be undertaken without independent study, evaluation, and testing for suitability.*



Via Malavolti, 36 - 41122 Modena - ITALY - Phone +39 (059) 254895 - Fax +39 (059) 253512 - mail: tecnord@tecnord.com - **www.tecnord.com**

## SL-PLB SUPER SERIES, LOGIC VALVE

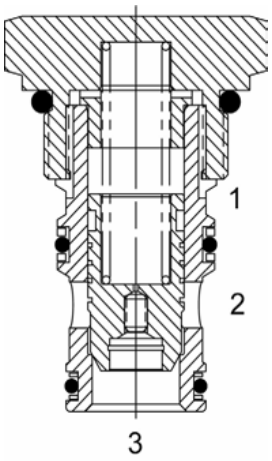


### DESCRIPTION

16 size, 1 5/16-12 thread, “Super” series, logic valve.

### OPERATION

The SL-PLB with an orifice between ports (3) and (1) maintains a constant flow rate from (3) regardless of load pressure changes in the system upstream of (3), or in the bypass leg at (2) as long as pressure at (2) is less than (1). Used for basic blocking applications.

### FEATURES

- Hardened parts for long life.
- Industry common cavity.

*For bidirectional applications see SL-PLC.*
*For metering see SLPCA or SL-PCB.*

### HYDRAULIC SYMBOL

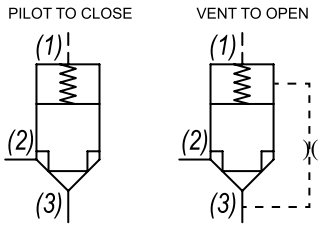


### PERFORMANCE

Actual Test Data (Cartridge Only)

### VALVE SPECIFICATIONS

| | |
|---|---|
| Nominal Flow | 40 GPM (151 LPM) |
| Rated Operating Pressure | 3500 PSI (241 bar) |
| Viscosity Range | 36 to 3000 SSU (3 to 647 cSt) |
| Filtration | ISO 18/16/13 |
| Media Operating Temp. Range | -40° to 250°F (-40° to 120°C) |
| Weight | .69 lbs (.31 kg) |
| Operating Fluid Media | General Purpose Hydraulic Fluid |
| Cartridge Torque Requirements | 90 ft-lbs (122 Nm) |
| Cavity | SUPER 3WS |
| Cavity Form Tool (Finishing) | 40500021 |
| Seal Kit | 21191409 |
| Seat Ratio | Area of the pilot is 1.5 times the area of the seat at Port (3) |

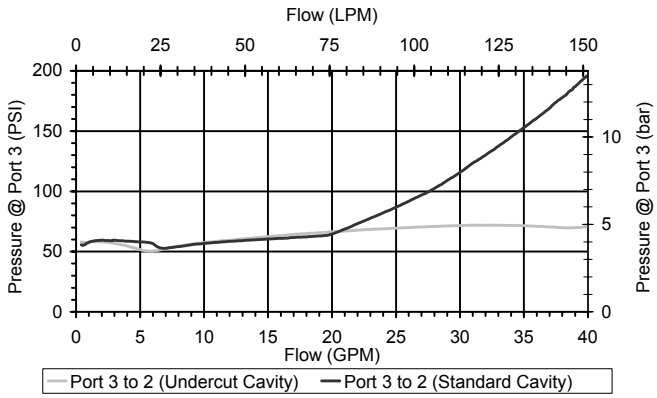


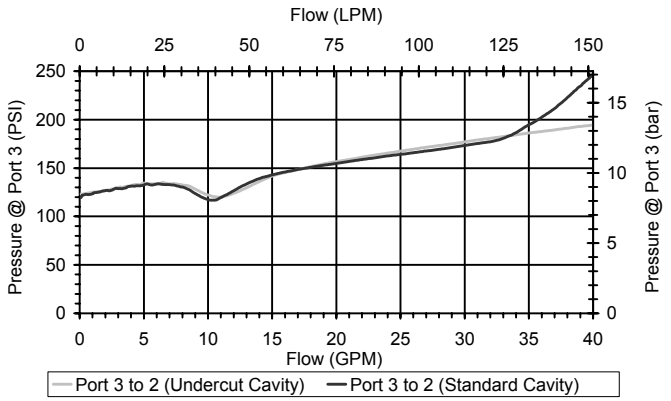


**WARNING:** *the specifications/application data shown in our catalogs and data sheets are intended only as a general guide for the product described (herein). Any specific application should not be undertaken without independent study, evaluation, and testing for suitability.*



Via Malavolti, 36 - 41122 Modena - ITALY - Phone +39 (059) 254895 - Fax +39 (059) 253512 - mail: tecnord@tecnord.com - **www.tecnord.com**

## DIMENSIONS

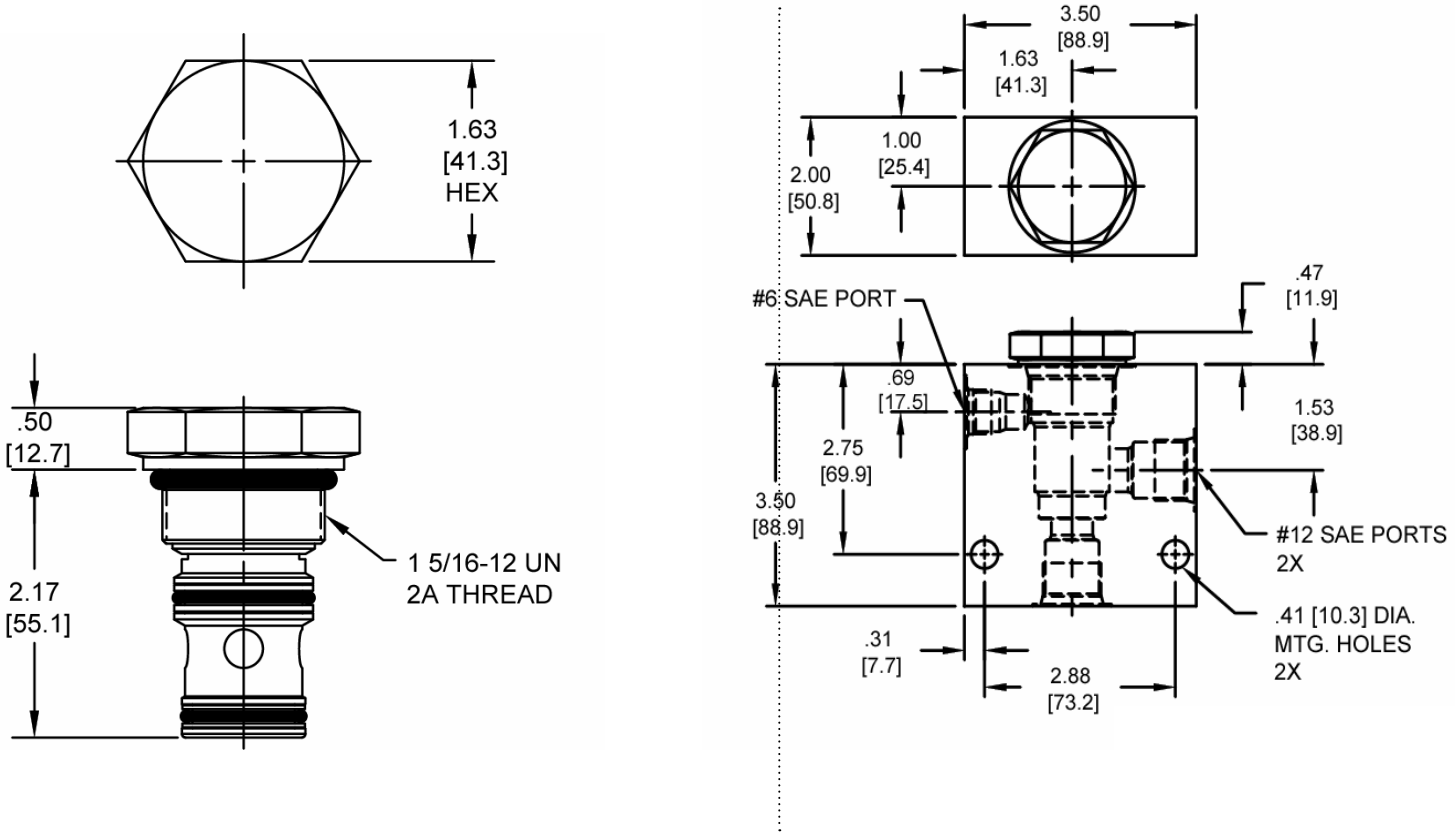


*Body Weight: 1.89 lbs (.86 kg)*

## ORDERING INFORMATION

**SL-PLB – ____ – ____ – ____**

**OPTIONS**

| | |
|---|---|
| Buna, Pilot to Close | **0P** |
| Viton, Pilot to Close | **VP** |
| Buna, Vent to Open | **0V** |
| Viton, Vent to Open | **VV** |
| Buna, Pilot to Close w/seals | **0B** |
| Viton, Pilot to Close w/seals | **VB** |
| Buna, Vent to Open w/seals | **0C** |
| Viton, Vent to Open w/seals | **VC** |

**PRESSURE SETTING**

| | |
|---|---|
| **0020** | 20 PSI |
| **0050** | 50 PSI |
| **0100** | 100 PSI |
| **0150** | 150 PSI |

**BODIES**

| | |
|---|---|
| **Blank** | Without Body |
| **S** | #12 SAE Ports |

**WARNING:** *the specifications/application data shown in our catalogs and data sheets are intended only as a general guide for the product described (herein). Any specific application should not be undertaken without independent study, evaluation, and testing for suitability.*



Via Malavolti, 36 - 41122 Modena - ITALY - Phone +39 (059) 254895 - Fax +39 (059) 253512 - mail: tecnord@tecnord.com - **www.tecnord.com**

## SL-PLC SUPER SERIES, LOGIC VALVE

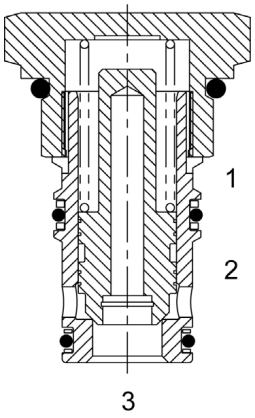


### DESCRIPTION

16 size, 1 5/16-12 thread, “Super” series, logic valve.

### OPERATION

The SL-PLC with an orifice between ports (3) and (1) maintains a constant flow rate from (3) regardless of load pressure changes in the system upstream of (3), or in the bypass leg at (2) as long as pressure at (2) is less than (1). Used for basic bidirectional blocking applications.

### FEATURES

- Hardened parts for long life.
- Industry common cavity.

*For metering see SL-PCA or SL-PCB.*

### HYDRAULIC SYMBOL

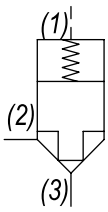


### PERFORMANCE

Actual Test Data (Cartridge Only)

### VALVE SPECIFICATIONS

| | |
|---|---|
| Nominal Flow | 40 GPM (151 LPM) |
| Rated Operating Pressure | 3500 PSI (241 bar) |
| Viscosity Range | 36 to 3000 SSU (3 to 647 cSt) |
| Filtration | ISO 18/16/13 |
| Media Operating Temp. Range | -40° to 250°F (-40° to 120°C) |
| Weight | .65 lbs (.29 kg) |
| Operating Fluid Media | General Purpose Hydraulic Fluid |
| Cartridge Torque Requirements | 90 ft-lbs (122 Nm) |
| Cavity | SUPER 3WS |
| Cavity Form Tool (Finishing) | 40500021 |
| Seal Kit | 21191409 |
| Seat Ratio | Area of the pilot is 2 times the area of the seat at Port (3) |

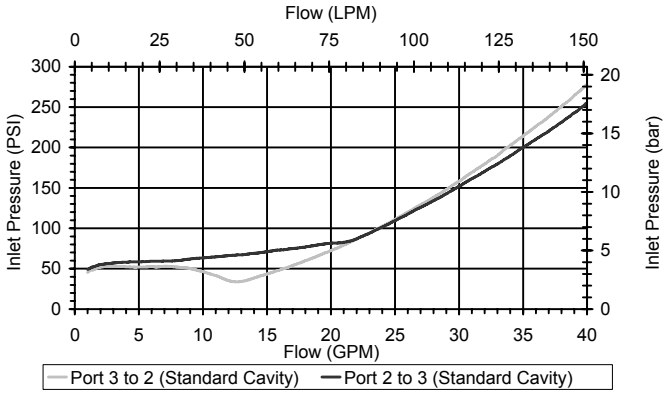


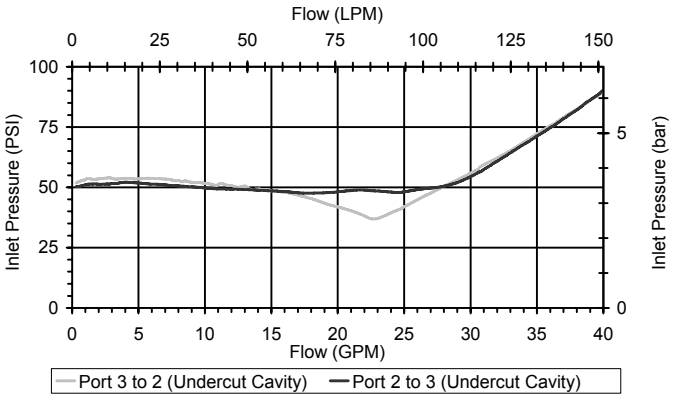


**WARNING:** *the specifications/application data shown in our catalogs and data sheets are intended only as a general guide for the product described (herein). Any specific application should not be undertaken without independent study, evaluation, and testing for suitability.*

## DIMENSIONS

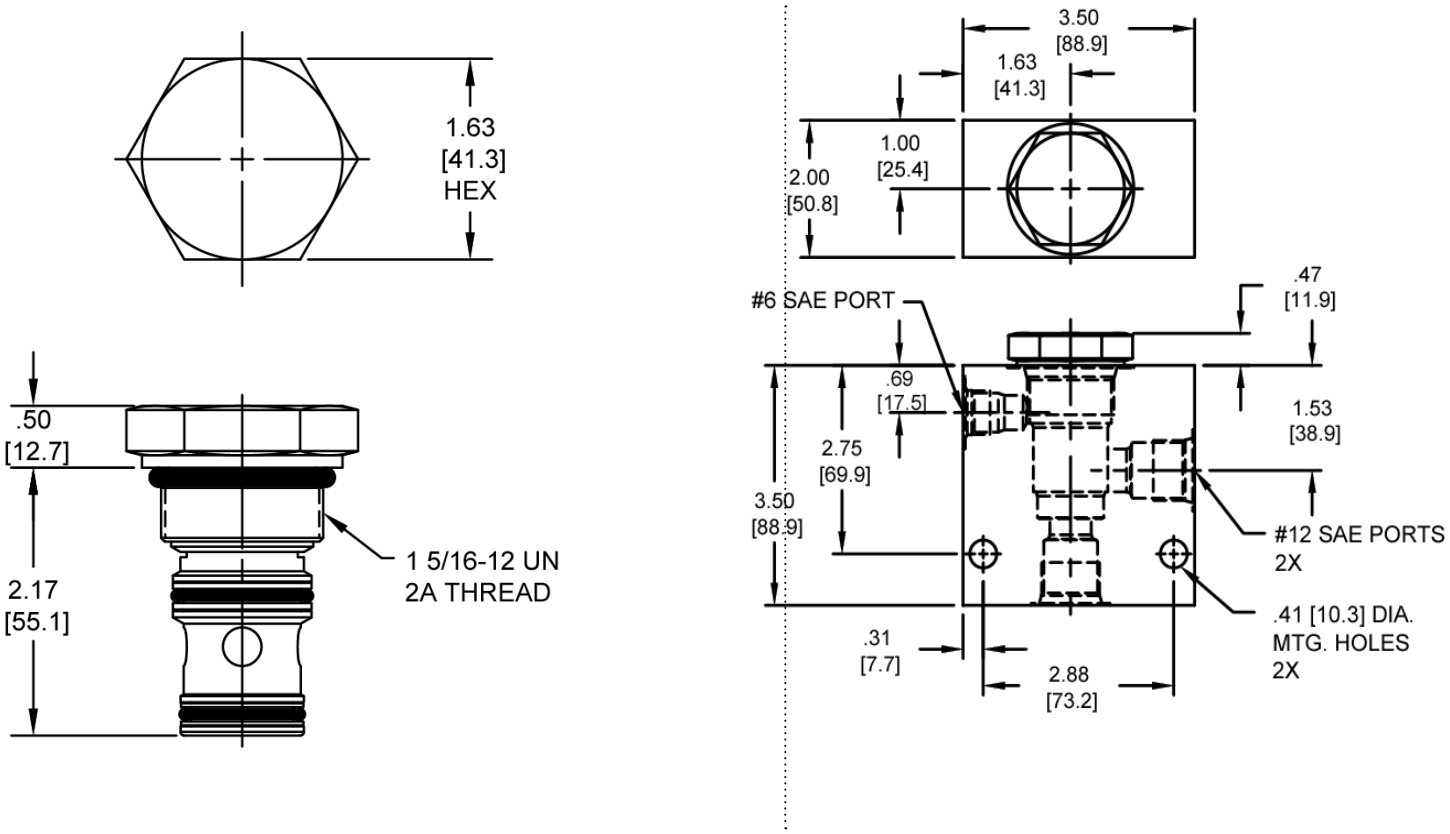


*Body Weight: 1.89 lbs (.86 kg)*

## ORDERING INFORMATION

**SL-PLC – ____ – ____ – ____**

**OPTIONS**

| | |
|---|---|
| Buna, Pilot to Close | **0P** |
| Viton, Pilot to Close | **VP** |
| Buna, Pilot to Close w/seals | **0B** |
| Viton, Pilot to Close w/seals | **VB** |

**PRESSURE SETTING**

| | |
|---|---|
| **0020** | 20 PSI |
| **0050** | 50 PSI |
| **0100** | 100 PSI |
| **0150** | 150 PSI |

**BODIES**

| | |
|---|---|
| **Blank** | Without Body |
| **S** | #12 SAE Ports |

**WARNING:** *the specifications/application data shown in our catalogs and data sheets are intended only as a general guide for the product described (herein). Any specific application should not be undertaken without independent study, evaluation, and testing for suitability.*



Via Malavolti, 36 - 41122 Modena - ITALY - Phone +39 (059) 254895 - Fax +39 (059) 253512 - mail: tecnord@tecnord.com - **www.tecnord.com**

**WARNING:** *the specifications/application data shown in our catalogs and data sheets are intended only as a general guide for the product described (herein). Any specific application should not be undertaken without independent study, evaluation, and testing for suitability.*



Via Malavolti, 36 - 41122 Modena - ITALY - Phone +39 (059) 254895 - Fax +39 (059) 253512 - mail: tecnord@tecnord.com - **www.tecnord.com**

## HAND PUMPS

| | cu in/stroke | PSI | cc/stroke | BAR | CAVITY | MODEL | PAGE |
|---|---|---|---|---|---|---|---|
| 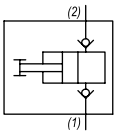 | 0.35 | 500 | 5.8 | 34 | 7/8-14 | **DE-HPA** | MF98 |
| 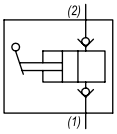 | 0.39 | 3000 | 6.4 | 207 | 7/8-14 | **DE-HPB** | MF100 |
| 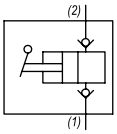 | 0.39 | 3000 | 6.4 | 207 | 7/8-14 | **DE-HPE** | MF102 |
| 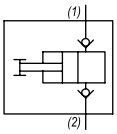 | 0.35 | 500 | 5.8 | 34 | 7/8-14 | **DE-HPC** | MF104 |
| 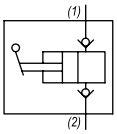 | 0.39 | 3000 | 6.4 | 207 | 7/8-14 | **DE-HPD** | MF106 |
| 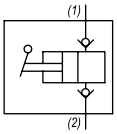 | 0.39 | 3000 | 6.4 | 207 | 7/8-14 | **DE-HPF** | MF108 |

## TYPICAL SCHEMATIC

Typical application for the HPA, HPB, HPC, and HPD is to supply pressure to release parking brake for towing.

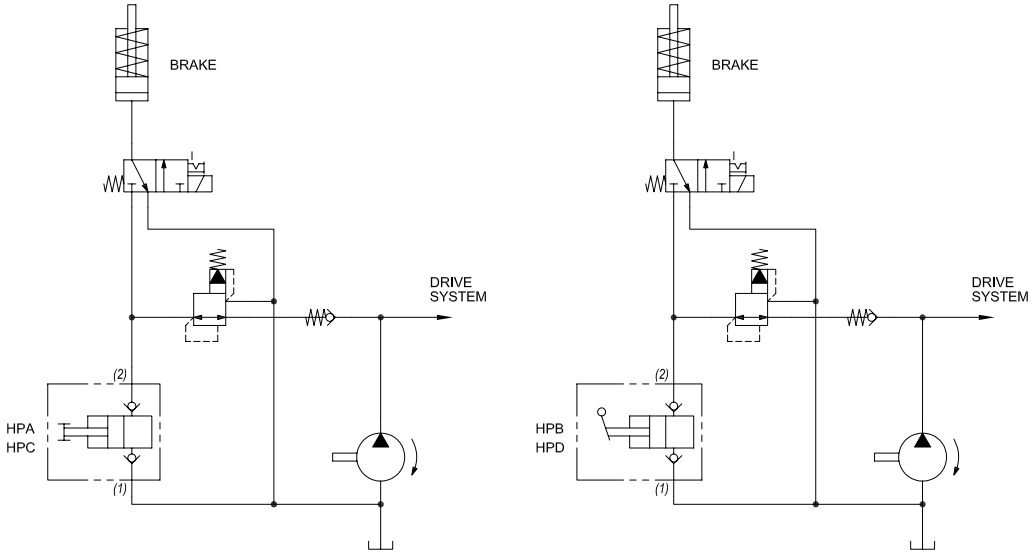


**WARNING:** *the specifications/application data shown in our catalogs and data sheets are intended only as a general guide for the product described (herein). Any specific application should not be undertaken without independent study, evaluation, and testing for suitability.*



Via Malavolti, 36 - 41122 Modena - ITALY - Phone +39 (059) 254895 - Fax +39 (059) 253512 - mail: tecnord@tecnord.com - **www.tecnord.com**

## DE-HPA HAND PUMP

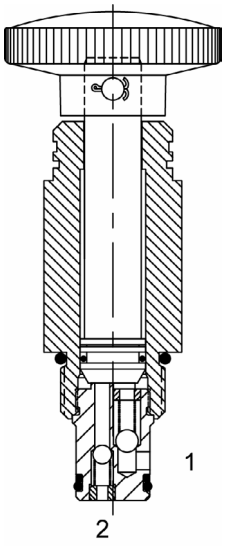


### DESCRIPTION

10 size, 7/8-14 thread, “Delta” series, cartridge type, plunger hand pump.

### OPERATION

The DE-HPA hand pump when pulled primes thru Port (1) and when pushed pressurizes outlet port (2).

### FEATURES

- Hardened parts for long life.
- Industry common cavity.

### HYDRAULIC SYMBOL

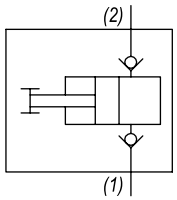


*This product is not intended as a load holding device.*

### PERFORMANCE

Actual Test Data (Cartridge Only)

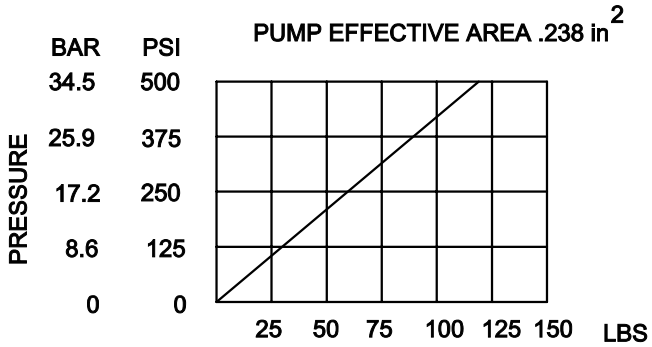


FORCE

ABOVE CURVE IS WITH
HYDRAULIC OIL 150 SSU AT 100°F.

### VALVE SPECIFICATIONS

| | |
|---|---|
| Nominal Flow | .35 cu in/stroke |
| Rated Operating Pressure | 500 PSI (34 bar) |
| Typical Internal Leakage (150 SSU) | 0-10 drops/min |
| Viscosity Range | 36 to 3000 SSU (3 to 647 cSt) |
| Filtration | ISO 18/16/13 |
| Media Operating Temp. Range | -40° to 250°F (-40° to 120°C) |
| Weight | .57 lbs (.26 kg) |
| Operating Fluid Media | General Purpose Hydraulic Fluid |
| Cartridge Torque Requirements | 30 ft-lbs (40.6 Nm) |
| Cavity | DELTA 2W |
| Cavity Form Tool (Finishing) | 40500000 |
| Seal Kit | 21191200 |

**WARNING:** *the specifications/application data shown in our catalogs and data sheets are intended only as a general guide for the product described (herein). Any specific application should not be undertaken without independent study, evaluation, and testing for suitability.*



Via Malavolti, 36 - 41122 Modena - ITALY - Phone +39 (059) 254895 - Fax +39 (059) 253512 - mail: tecnord@tecnord.com - **www.tecnord.com**

## DIMENSIONS

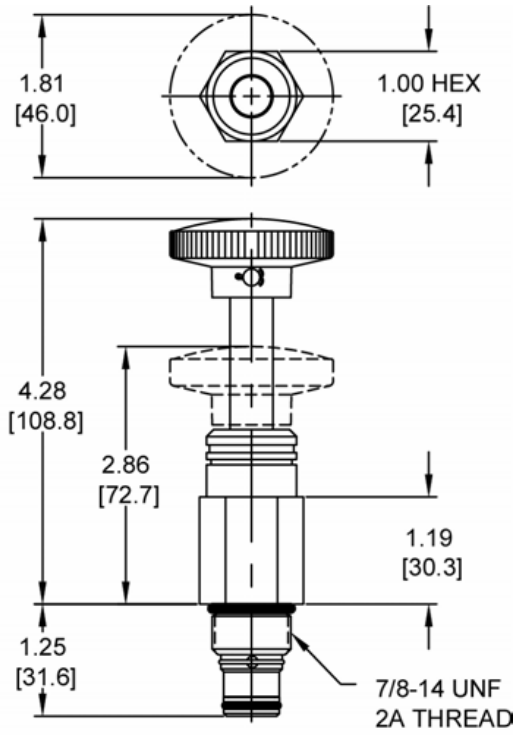


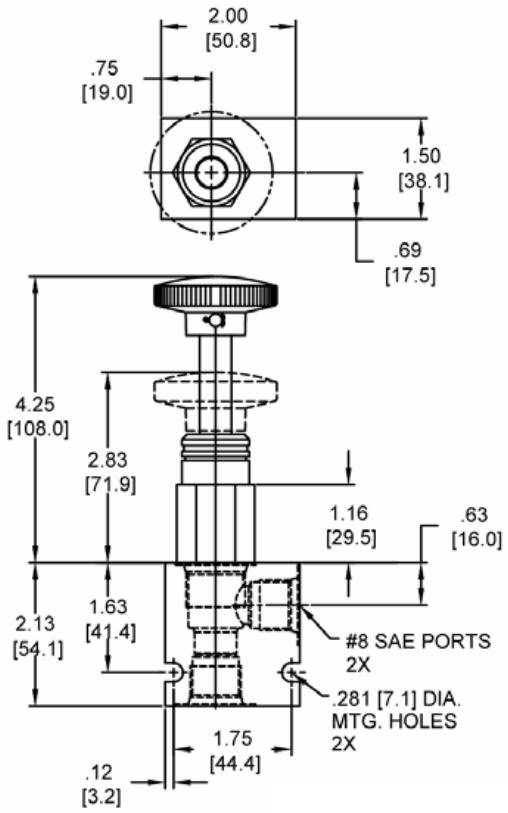


*Body Weight: .47 lbs (21 kg)*

## ORDERING INFORMATION

**DE-HPA –** _____ **–** _____

| **OPTIONS** | | **BODIES** | |
|---|---|---|---|
| Buna, Knob | **0K** | **Blank** | Without Body |
| Viton, Knob | **VK** | **N** | 3/8” NPTF Ports |
| | | **S** | #8 SAE Ports |

**WARNING:** *the specifications/application data shown in our catalogs and data sheets are intended only as a general guide for the product described (herein). Any specific application should not be undertaken without independent study, evaluation, and testing for suitability.*



Via Malavolti, 36 - 41122 Modena - ITALY - Phone +39 (059) 254895 - Fax +39 (059) 253512 - mail: tecnord@tecnord.com - **www.tecnord.com**

## DE-HPB HAND PUMP, PUSH TO PUMP TYPE

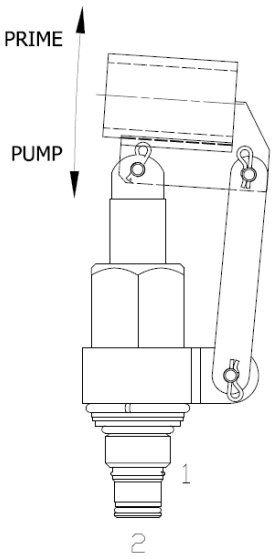


### DESCRIPTION

10 size, 7/8-14 thread, “Delta” series, screw in, cartridge type, hand pump.

### OPERATION

The DE-HPB hand pump when pipe handle is lifted, primes thru port (1) and when pushed provides flow pressure to outlet port (2).

### FEATURES

- Large displacement per stroke.
- Industry common cavity.

### HYDRAULIC SYMBOL

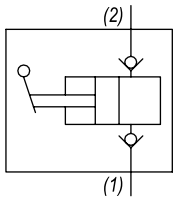


*This product is not intended as a load holding device.* ***Linkage is not to be removed. 36” Maximum handle length.***

### PERFORMANCE

Actual Test Data (Cartridge Only)

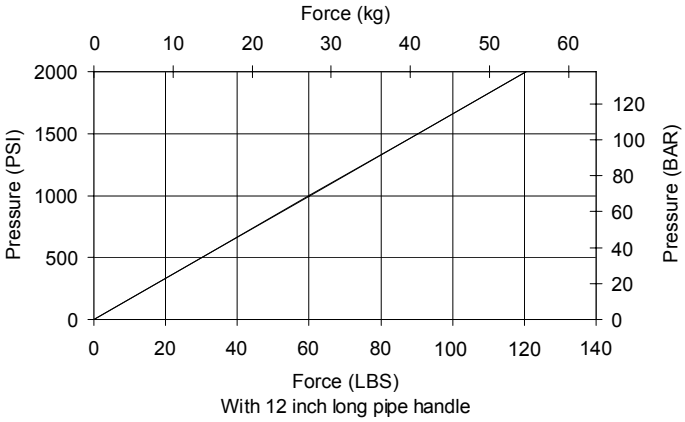


With 12 inch long pipe handle

### VALVE SPECIFICATIONS

| | |
|---|---|
| Nominal Flow | .39 cu in/stroke |
| Rated Operating Pressure | 3000 PSI (207 bar) |
| Typical Internal Leakage (150 SSU) | 0-10 drops/min |
| Viscosity Range | 36 to 3000 SSU (3 to 647 cSt) |
| Filtration | ISO 18/16/13 |
| Media Operating Temp. Range | -40° to 250°F (-40° to 120°C) |
| Weight | 1.5 lbs (.69 kg) |
| Operating Fluid Media | General Purpose Hydraulic Fluid |
| Cartridge Torque Requirements | 30 ft-lbs (40.6 Nm) |
| Cavity | DELTA 2W |
| Cavity Form Tool (Finishing) | 40500000 |
| Seal Kit | 21191200 |

**WARNING:** *the specifications/application data shown in our catalogs and data sheets are intended only as a general guide for the product described (herein). Any specific application should not be undertaken without independent study, evaluation, and testing for suitability.*



Via Malavolti, 36 - 41122 Modena - ITALY - Phone +39 (059) 254895 - Fax +39 (059) 253512 - mail: tecnord@tecnord.com - **www.tecnord.com**

## DIMENSIONS

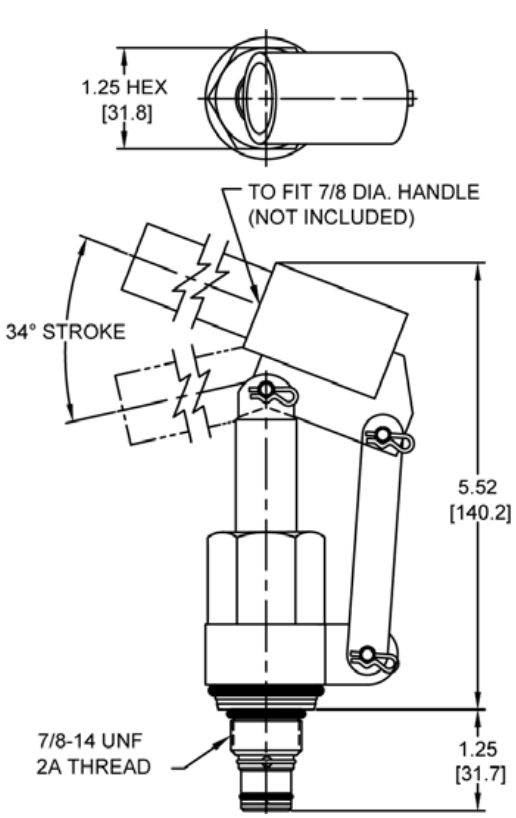


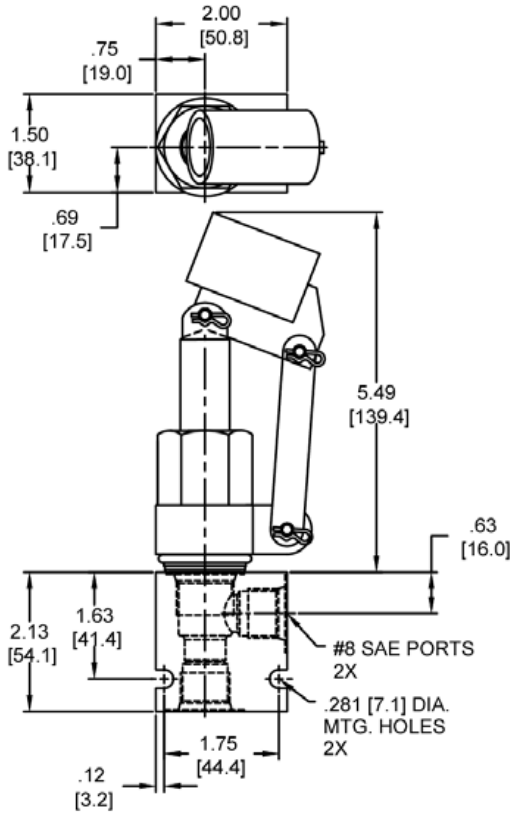


*Body Weight: .47 lbs (21 kg)*

## ORDERING INFORMATION

**DE-HPB –** _____ **–** _____

| **OPTIONS** | | **BODIES** | |
|---|---|---|---|
| Buna, Linkage | **0L** | **Blank** | Without Body |
| Viton, Linkage | **VL** | **N** | 3/8” NPTF Ports |
| | | **S** | #8 SAE Ports |

**WARNING:** *the specifications/application data shown in our catalogs and data sheets are intended only as a general guide for the product described (herein). Any specific application should not be undertaken without independent study, evaluation, and testing for suitability.*



Via Malavolti, 36 - 41122 Modena - ITALY - Phone +39 (059) 254895 - Fax +39 (059) 253512 - mail: tecnord@tecnord.com - **www.tecnord.com**

## DE-HPE HAND PUMP, PULL TO PUMP TYPE

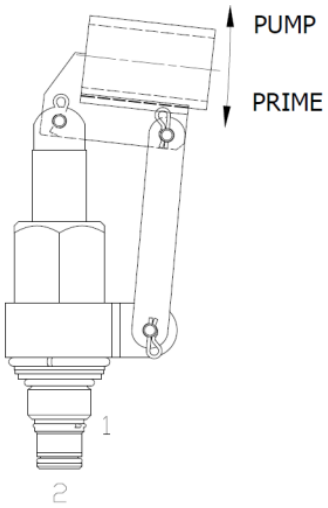


### DESCRIPTION

10 size, 7/8-14 thread, “Delta” series, screw in, cartridge type, hand pump.

### OPERATION

The DE-HPE hand pump when pipe handle is pushed, primes thru port (1) and when lifted provides flow pressure to outlet port (2).

### FEATURES

- Large displacement per stroke.
- Industry common cavity.

### HYDRAULIC SYMBOL

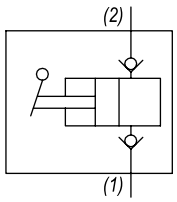


*This product is not intended as a load holding device.* ***Linkage is not to be removed. 36” Maximum handle length.***

### PERFORMANCE

Actual Test Data (Cartridge Only)

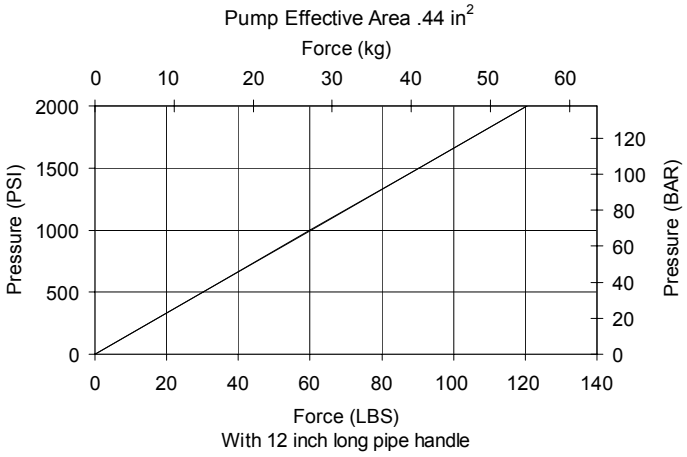


### VALVE SPECIFICATIONS

| | |
|---|---|
| Nominal Flow | .39 cu in/stroke |
| Rated Operating Pressure | 3000 PSI (207 bar) |
| Typical Internal Leakage (150 SSU) | 0-10 drops/min |
| Viscosity Range | 36 to 3000 SSU (3 to 647 cSt) |
| Filtration | ISO 18/16/13 |
| Media Operating Temp. Range | -40° to 250°F (-40° to 120°C) |
| Weight | 1.5 lbs (.69 kg) |
| Operating Fluid Media | General Purpose Hydraulic Fluid |
| Cartridge Torque Requirements | 30 ft-lbs (40.6 Nm) |
| Cavity | DELTA 2W |
| Cavity Form Tool (Finishing) | 40500000 |
| Seal Kit | 21191200 |

**WARNING:** *the specifications/application data shown in our catalogs and data sheets are intended only as a general guide for the product described (herein). Any specific application should not be undertaken without independent study, evaluation, and testing for suitability.*



Via Malavolti, 36 - 41122 Modena - ITALY - Phone +39 (059) 254895 - Fax +39 (059) 253512 - mail: tecnord@tecnord.com - **www.tecnord.com**

## DIMENSIONS

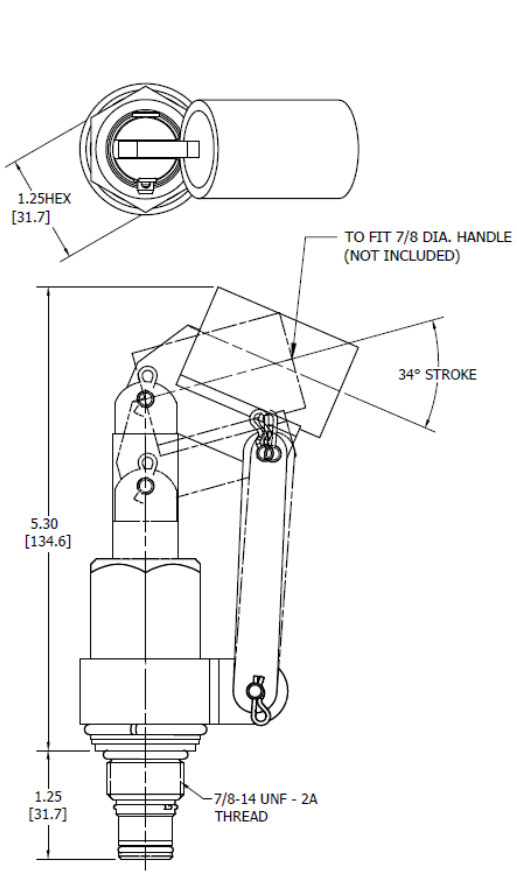


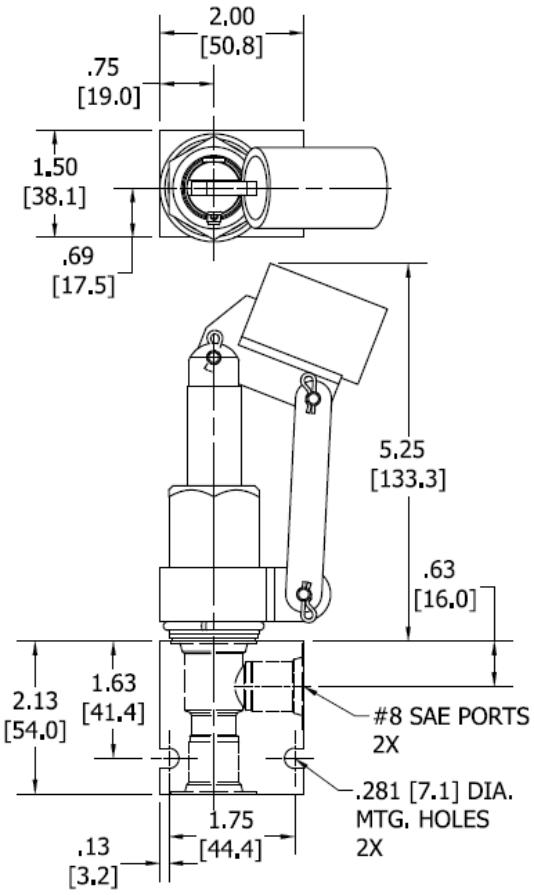


*Body Weight: .47 lbs (21 kg)*

## ORDERING INFORMATION

**DE-HPE –** _____ **–** _____

| **OPTIONS** | | **BODIES** | |
|---|---|---|---|
| Buna, Linkage | **0L** | **Blank** | Without Body |
| Viton, Linkage | **VL** | **N** | 3/8" NPTF Ports |
| | | **S** | #8 SAE Ports |

**WARNING:** *the specifications/application data shown in our catalogs and data sheets are intended only as a general guide for the product described (herein). Any specific application should not be undertaken without independent study, evaluation, and testing for suitability.*



Via Malavolti, 36 - 41122 Modena - ITALY - Phone +39 (059) 254895 - Fax +39 (059) 253512 - mail: tecnord@tecnord.com - **www.tecnord.com**

## DE-HPC HAND PUMP

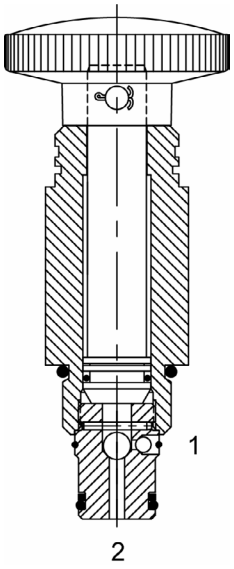


### DESCRIPTION

10 size, 7/8-14 thread, “Delta” series, cartridge type, plunger hand pump.

### OPERATION

The DE-HPC hand pump when pulled primes thru port (2) and when pushed provide flow pressure to outlet port (1).

### FEATURES

- Small profile.
- Industry common cavity.
- Large displacement per stroke.

### HYDRAULIC SYMBOL

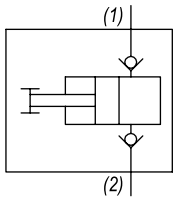


*This product is not intended as a load holding device.*

### PERFORMANCE

Actual Test Data (Cartridge Only)

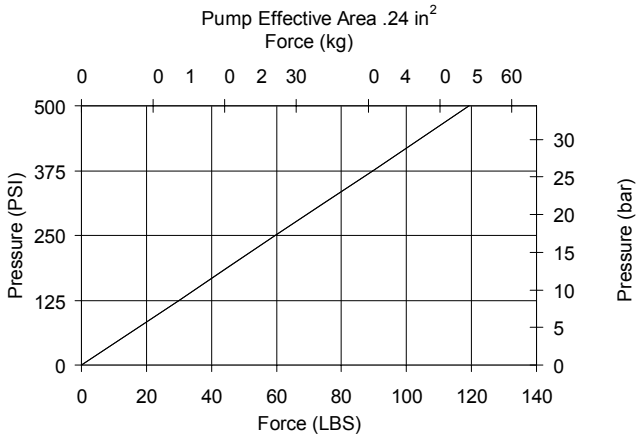


### VALVE SPECIFICATIONS

| | |
|---|---|
| Nominal Flow | .35 cu in/stroke |
| Rated Operating Pressure | 500 PSI (34 bar) |
| Typical Internal Leakage (150 SSU) | 0-10 drops/min |
| Viscosity Range | 36 to 3000 SSU (3 to 647 cSt) |
| Filtration | ISO 18/16/13 |
| Media Operating Temp. Range | -40° to 250°F (-40° to 120°C) |
| Weight | .57 lbs (.26 kg) |
| Operating Fluid Media | General Purpose Hydraulic Fluid |
| Cartridge Torque Requirements | 30 ft-lbs (40.6 Nm) |
| Cavity | DELTA 2W |
| Cavity Form Tool (Finishing) | 40500000 |
| Seal Kit | 21191200 |

**WARNING:** *the specifications/application data shown in our catalogs and data sheets are intended only as a general guide for the product described (herein). Any specific application should not be undertaken without independent study, evaluation, and testing for suitability.*



Via Malavolti, 36 - 41122 Modena - ITALY - Phone +39 (059) 254895 - Fax +39 (059) 253512 - mail: tecnord@tecnord.com - **www.tecnord.com**

## DIMENSIONS

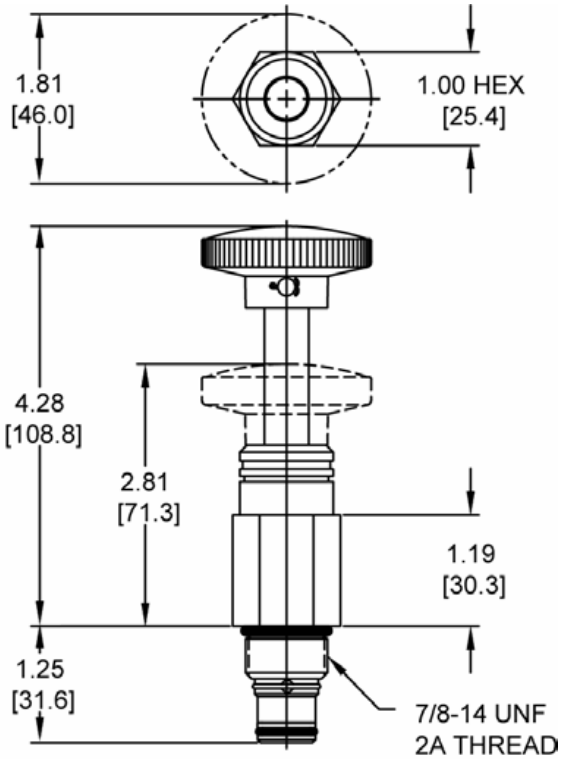


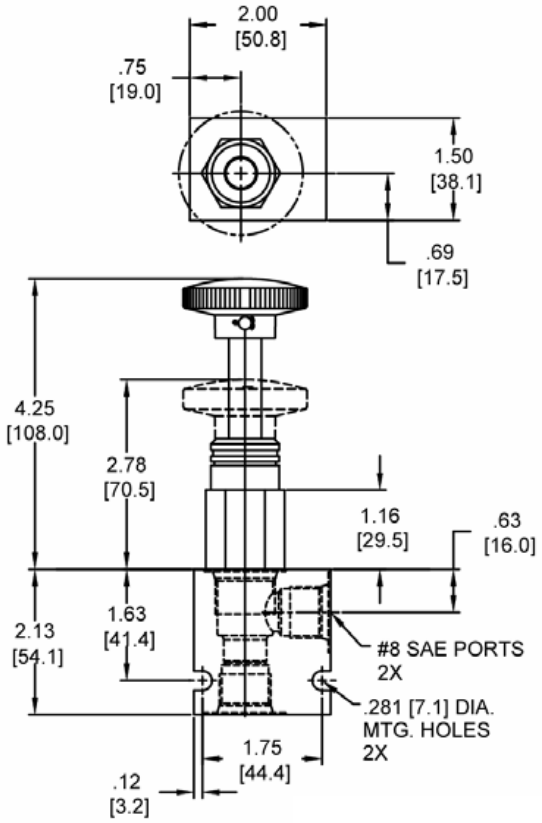


*Body Weight: .47 lbs (21 kg)*

## ORDERING INFORMATION

**DE-HPC –** _____ **–** _____

| **OPTIONS** | | **BODIES** | |
|---|---|---|---|
| Buna, Knob | **0K** | **Blank** | Without Body |
| Viton, Knob | **VK** | **N** | 3/8" NPTF Ports |
| | | **S** | #8 SAE Ports |

**WARNING:** *the specifications/application data shown in our catalogs and data sheets are intended only as a general guide for the product described (herein). Any specific application should not be undertaken without independent study, evaluation, and testing for suitability.*



Via Malavolti, 36 - 41122 Modena - ITALY - Phone +39 (059) 254895 - Fax +39 (059) 253512 - mail: tecnord@tecnord.com - **www.tecnord.com**

## DE-HPD HAND PUMP, PUSH TO PUMP TYPE

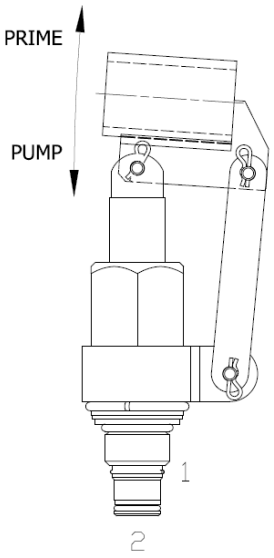


### DESCRIPTION

10 size, 7/8-14 thread, “Delta” series, cartridge type, hand pump.

### OPERATION

The DE-HPD hand pump when pipe handle is lifted, primes thru port (2) and when pushed provides flow pressure to outlet port (1).

### FEATURES

- Large displacement per stroke.
- Industry common cavity.

### HYDRAULIC SYMBOL

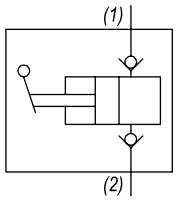


*This product is not intended as a load holding device.* ***Linkage is not to be removed. 36” Maximum handle length.***

### PERFORMANCE

Actual Test Data (Cartridge Only)

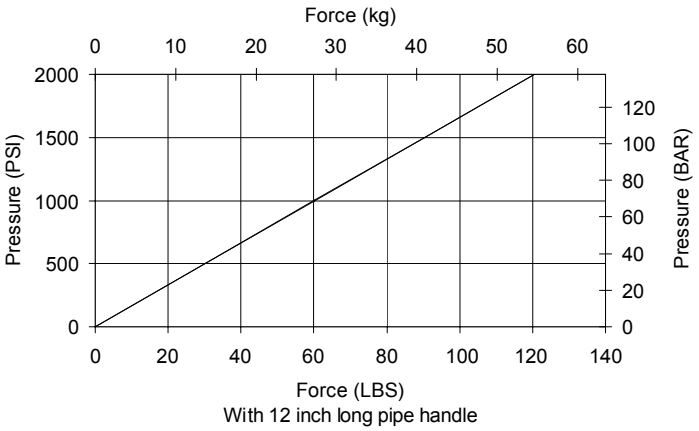


With 12 inch long pipe handle

### VALVE SPECIFICATIONS

| | |
|---|---|
| Nominal Flow | .39 cu in/stroke |
| Rated Operating Pressure | 3000 PSI (207 bar) |
| Typical Internal Leakage (150 SSU) | 0-10 drops/min |
| Viscosity Range | 36 to 3000 SSU (3 to 647 cSt) |
| Filtration | ISO 18/16/13 |
| Media Operating Temp. Range | -40° to 250°F (-40° to 120°C) |
| Weight | 1.5 lbs (.69 kg) |
| Operating Fluid Media | General Purpose Hydraulic Fluid |
| Cartridge Torque Requirements | 30 ft-lbs (40.6 Nm) |
| Cavity | DELTA 2W |
| Cavity Form Tool (Finishing) | 40500000 |
| Seal Kit | 21191200 |

**WARNING:** *the specifications/application data shown in our catalogs and data sheets are intended only as a general guide for the product described (herein). Any specific application should not be undertaken without independent study, evaluation, and testing for suitability.*



Via Malavolti, 36 - 41122 Modena - ITALY - Phone +39 (059) 254895 - Fax +39 (059) 253512 - mail: tecnord@tecnord.com - **www.tecnord.com**

## DIMENSIONS

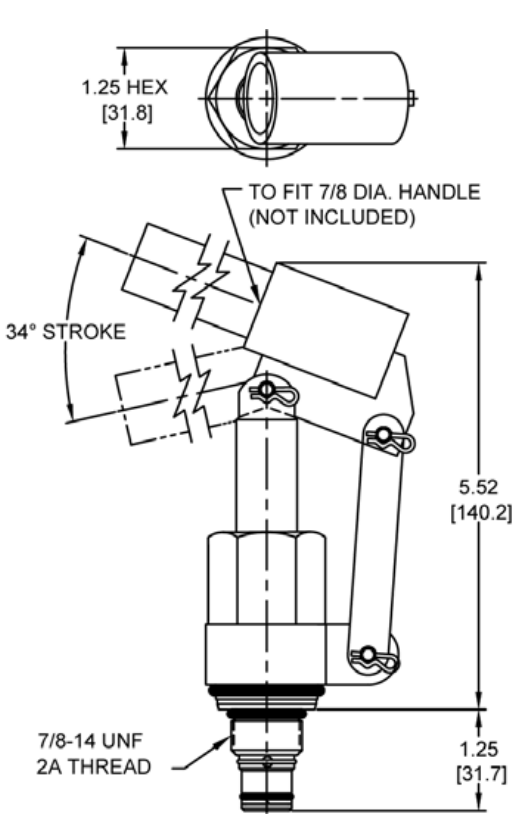


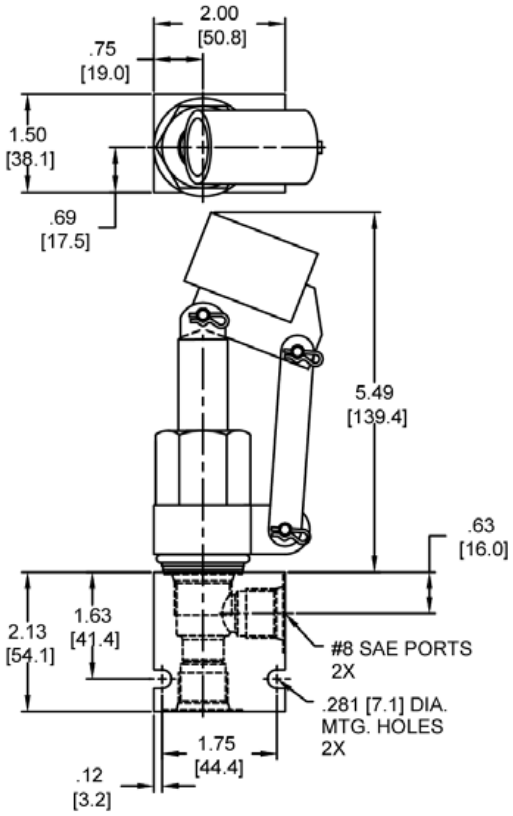


*Body Weight: .47 lbs (21 kg)*

## ORDERING INFORMATION

**DE-HPD –** _____ **–** _____

| **OPTIONS** | | **BODIES** | |
|---|---|---|---|
| Buna, Linkage | **0L** | **Blank** | Without Body |
| Viton, Linkage | **VL** | **N** | 3/8” NPTF Ports |
| | | **S** | #8 SAE Ports |

**WARNING:** *the specifications/application data shown in our catalogs and data sheets are intended only as a general guide for the product described (herein). Any specific application should not be undertaken without independent study, evaluation, and testing for suitability.*



Via Malavolti, 36 - 41122 Modena - ITALY - Phone +39 (059) 254895 - Fax +39 (059) 253512 - mail: tecnord@tecnord.com - **www.tecnord.com**

## DE-HPF HAND PUMP, PULL TO PUMP TYPE

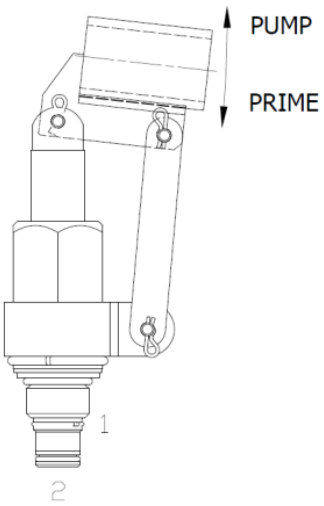


### DESCRIPTION

10 size, 7/8-14 thread, “Delta” series, cartridge type, hand pump.

### OPERATION

The DE-HPF hand pump when pipe handle is pushed, primes thru port (2) and when lifted provides flow pressure to outlet port (1).

### FEATURES

- Large displacement per stroke.
- Industry common cavity.

### HYDRAULIC SYMBOL

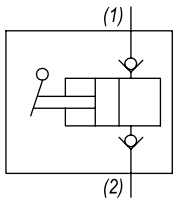


*This product is not intended as a load holding device.* ***Linkage is not to be removed. 36” Maximum handle length.***

### PERFORMANCE

Actual Test Data (Cartridge Only)

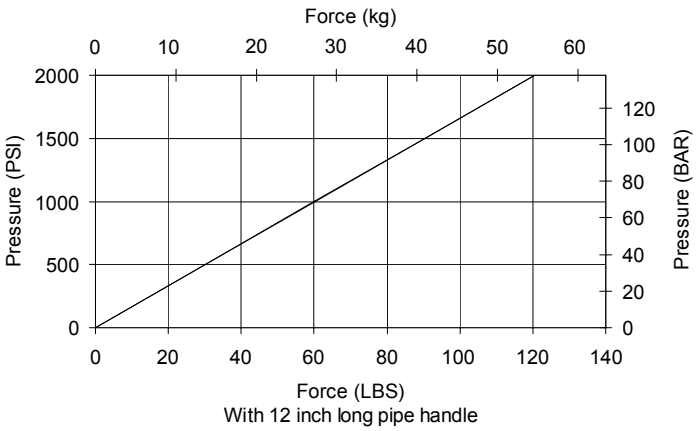


### VALVE SPECIFICATIONS

| | |
|---|---|
| Nominal Flow | .39 cu in/stroke |
| Rated Operating Pressure | 3000 PSI (207 bar) |
| Typical Internal Leakage (150 SSU) | 0-10 drops/min |
| Viscosity Range | 36 to 3000 SSU (3 to 647 cSt) |
| Filtration | ISO 18/16/13 |
| Media Operating Temp. Range | -40° to 250°F (-40° to 120°C) |
| Weight | 1.5 lbs (.69 kg) |
| Operating Fluid Media | General Purpose Hydraulic Fluid |
| Cartridge Torque Requirements | 30 ft-lbs (40.6 Nm) |
| Cavity | DELTA 2W |
| Cavity Form Tool (Finishing) | 40500000 |
| Seal Kit | 21191200 |

**WARNING:** *the specifications/application data shown in our catalogs and data sheets are intended only as a general guide for the product described (herein). Any specific application should not be undertaken without independent study, evaluation, and testing for suitability.*



Via Malavolti, 36 - 41122 Modena - ITALY - Phone +39 (059) 254895 - Fax +39 (059) 253512 - mail: tecnord@tecnord.com - **www.tecnord.com**

## DIMENSIONS

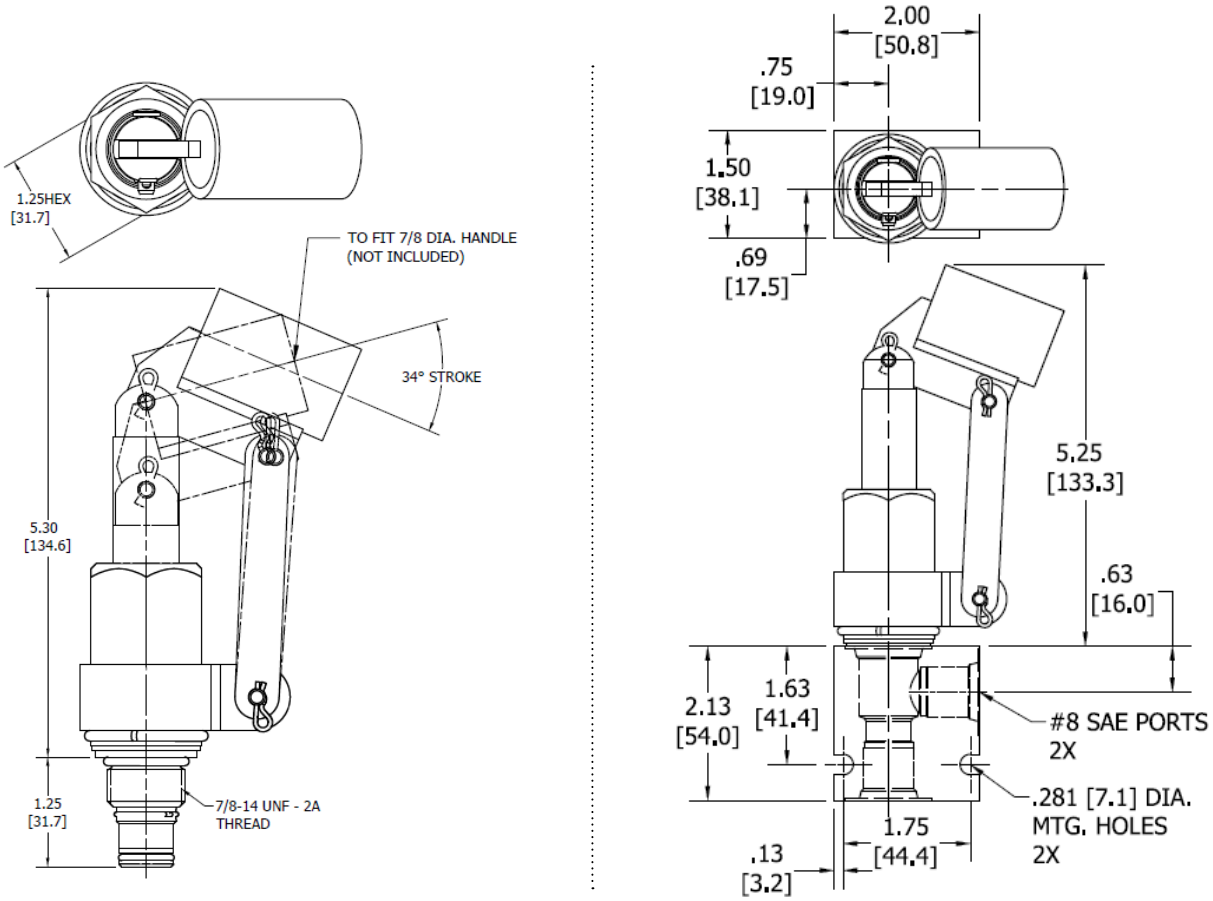


*Body Weight: .47 lbs (21 kg)*

## ORDERING INFORMATION

**DE-HPF –** _____ **–** _____

| OPTIONS | | BODIES | |
|---|---|---|---|
| Buna, Linkage | **0L** | **Blank** | Without Body |
| Viton, Linkage | **VL** | **N** | 3/8" NPTF Ports |
| | | **S** | #8 SAE Ports |

**WARNING:** *the specifications/application data shown in our catalogs and data sheets are intended only as a general guide for the product described (herein). Any specific application should not be undertaken without independent study, evaluation, and testing for suitability.*



Via Malavolti, 36 - 41122 Modena - ITALY - Phone +39 (059) 254895 - Fax +39 (059) 253512 - mail: tecnord@tecnord.com - **www.tecnord.com**

# MECHANICAL PRESSURE CONTROLS

Section / Description page

**DIRECT ACTING AND DIFFERENTIAL AREA RELIEF VALVES** ..... MP3

**PILOT OPERATED RELIEF VALVES** ..... MP31

**CROSSOVER RELIEF VALVES** ..... MP47

**PRESSURE COMPENSATED REGULATOR VALVES** ..... MP53

**PRESSURE REDUCING/RELIEVING VALVES** ..... MP87

**SEQUENCE VALVES** ..... MP95

**SHUT DOWN VALVES** ..... MP119

**WARNING:** *the specifications/application data shown in our catalogs and data sheets are intended only as a general guide for the product described (herein). Any specific application should not be undertaken without independent study, evaluation, and testing for suitability.*

W 50/ 2022

Via Malavolti, 36 - 41122 Modena - ITALY - Phone +39 (059) 254895 - Fax +39 (059) 253512 - mail: tecnord@tecnord.com - **www.tecnord.com**

**WARNING:** *the specifications/application data shown in our catalogs and data sheets are intended only as a general guide for the product described (herein). Any specific application should not be undertaken without independent study, evaluation, and testing for suitability.*



Via Malavolti, 36 - 41122 Modena - ITALY - Phone +39 (059) 254895 - Fax +39 (059) 253512 - mail: tecnord@tecnord.com - **www.tecnord.com**

## DIRECT ACTING AND DIFFERENTIAL AREA RELIEF VALVES

| DIRECT ACTING RELIEF VALVES | GPM | PSI | LPM | BAR | CAVITY | MODEL | PAGE |
|---|---|---|---|---|---|---|---|
| 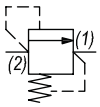 | 12 | 3500 | 45 | 241 | 7/8-14 | **DE-RCA** | MP4 |
| | 5 | 3000 | 19 | 207 | 5/8-18 | **MA-RVA** | MP6 |
| | 6 | 3500 | 23 | 241 | 3/4-16 | **PB-RVA** | MP8 |
| | 8 | 4000 | 30 | 276 | 7/8-14 | **DE-RVA** | MP10 |
| | 6 | 3500 | 23 | 241 | 3/4-16 | **PB-RWA** | MP12 |
| | 8 | 4000 | 30 | 276 | 7/8-14 | **DE-RWA** | MP14 |
| | 20 | 4000 | 76 | 276 | 7/8-14 | **DE-RWF** | MP16 |

| DIFFERENTIAL AREA RELIEF VALVES | GPM | PSI | LPM | BAR | CAVITY | MODEL | PAGE |
|---|---|---|---|---|---|---|---|
| 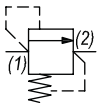 | 15 | 3500 | 57 | 241 | 7/8-14 | **DE-RCD** | MP18 |
| | 8 | 3500 | 30 | 241 | 3/4-16 | **PB-RVD** | MP20 |
| | 15 | 4000 | 57 | 276 | 7/8-14 | **DE-RVD** | MP22 |
| | 40 | 5000 | 151 | 345 | 7/8-14 | **HE-RVD** | MP24 |
| | 8 | 3500 | 30 | 241 | 3/4-16 | **PB-RWD** | MP26 |
| | 15 | 4000 | 57 | 276 | 7/8-14 | **DE-RWD** | MP28 |

## TYPICAL SCHEMATIC

Typical application for the RVA, RVD, RWA, RWD is to protect pump and system.
Typical application for the RCA and RCD is cross over relief to protect motor in both directions, where lowest possible price is desired.

**WARNING:** *the specifications/application data shown in our catalogs and data sheets are intended only as a general guide for the product described (herein). Any specific application should not be undertaken without independent study, evaluation, and testing for suitability.*



Via Malavolti, 36 - 41122 Modena - ITALY - Phone +39 (059) 254895 - Fax +39 (059) 253512 - mail: tecnord@tecnord.com - **www.tecnord.com**

## DE-RCA GUIDED BALL, DIRECT ACTING RELIEF VALVE

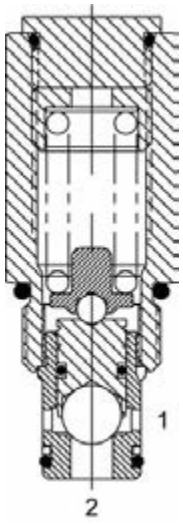


### DESCRIPTION

10 size, 7/8-14 thread, “Delta” series, direct acting relief valve.

### OPERATION

The DE-RCA blocks flow from (2) to (1) until sufficient pressure is present at (2) to force the poppet to open and allow metered flow from (2) to (1). The cartridge offers smooth transition in response to load changes in common hydraulic circuits.

### FEATURES

- Hardened parts for long life.
- Industry common cavity.

### HYDRAULIC SYMBOL

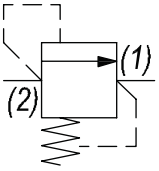


*Installation Space Saving Product. Cannot be field adjusted. Not recommended for crossover relief valve applications, use DE-RWA.*

### PERFORMANCE

Actual Test Data (Cartridge Only)

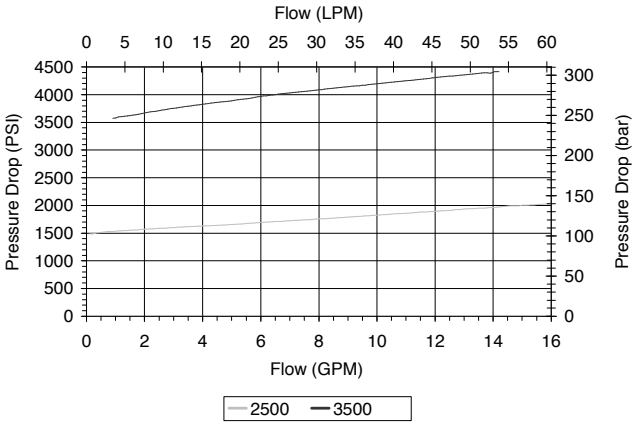


### VALVE SPECIFICATIONS

| | |
|---|---|
| Nominal Flow | 12 GPM (45 LPM) |
| Rated Operating Pressure | 3500 PSI (241 bar) |
| Viscosity Range | 36 to 3000 SSU (3 to 647 cSt) |
| Filtration | ISO 18/16/13 |
| Media Operating Temp. Range | -40° to 250°F (-40° to 120°C) |
| Weight | .38 lbs (.17 kg) |
| Operating Fluid Media | General Purpose Hydraulic Fluid |
| Cartridge Torque Requirements | 30 ft-lbs (40.6 Nm) |
| Cavity | DELTA 2W |
| Cavity Form Tool (Finishing) | 40500000 |
| Seal Kit | 21191200 |

**WARNING:** *the specifications/application data shown in our catalogs and data sheets are intended only as a general guide for the product described (herein). Any specific application should not be undertaken without independent study, evaluation, and testing for suitability.*



Via Malavolti, 36 - 41122 Modena - ITALY - Phone +39 (059) 254895 - Fax +39 (059) 253512 - mail: tecnord@tecnord.com - **www.tecnord.com**

## DIMENSIONS

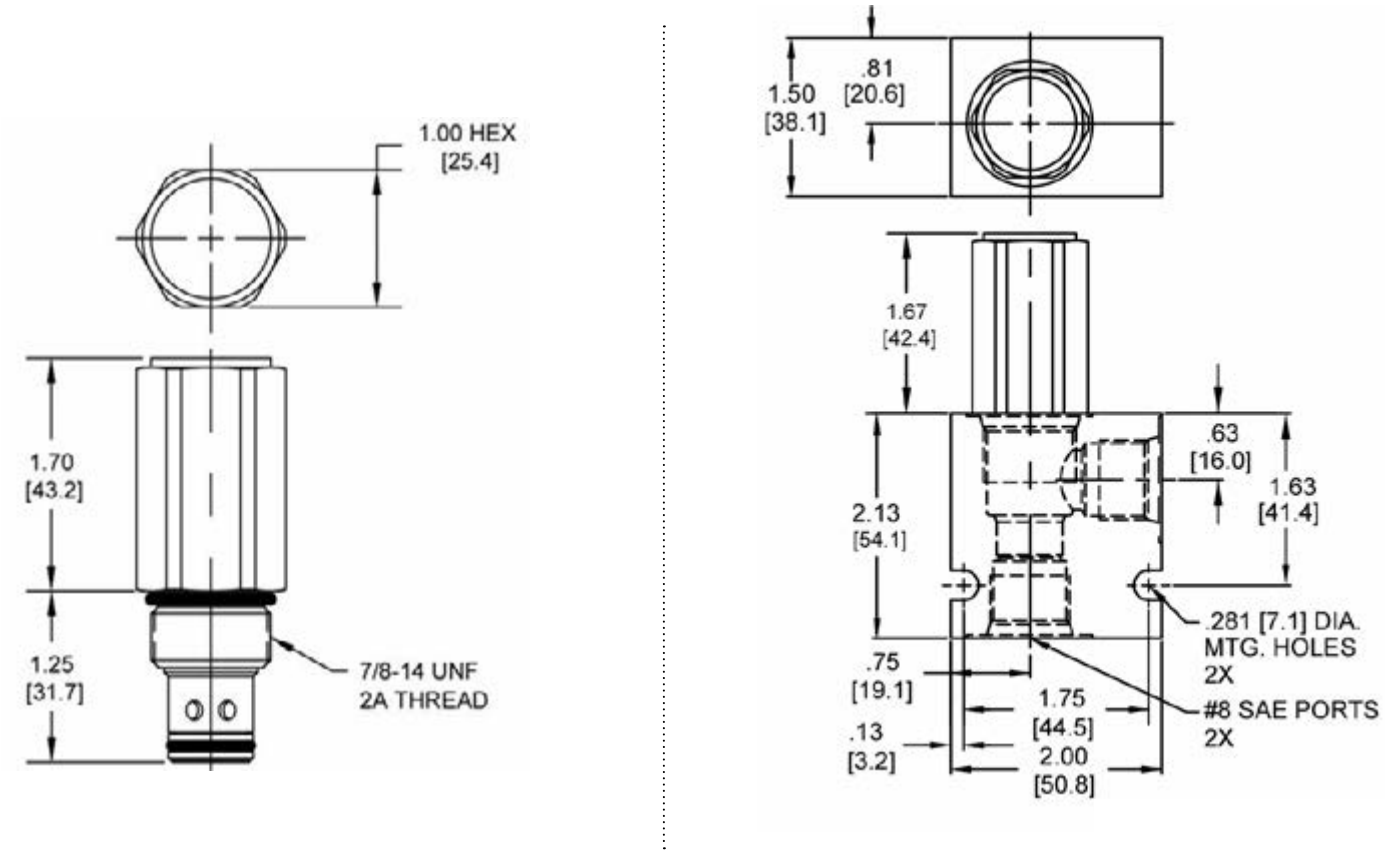


*Body Weight: .47 lbs (.21 kg)*

## ORDERING INFORMATION

**DE-RCA** – _____ – _____ – _____

**OPTIONS**

| | |
|---|---|
| Buna Standard | **00** |
| Viton Standard | **V0** |

**PRESSURE RANGE/SETTING**

| | |
|---|---|
| **2500** | 100 - 2500 PSI |
| **3500** | 250 - 3500 PSI |

**BODIES**

| | |
|---|---|
| **Blank** | Without Body |
| **N** | 3/8" NPTF Ports |
| **S** | #8 SAE Ports |

**WARNING:** *the specifications/application data shown in our catalogs and data sheets are intended only as a general guide for the product described (herein). Any specific application should not be undertaken without independent study, evaluation, and testing for suitability.*



Via Malavolti, 36 - 41122 Modena - ITALY - Phone +39 (059) 254895 - Fax +39 (059) 253512 - mail: tecnord@tecnord.com - **www.tecnord.com**

## MA-RVA DIRECT ACTING RELIEF VALVE

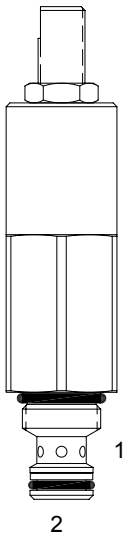


### DESCRIPTION

7 size, 5/8-18 thread, “Mini” series, direct acting relief valve.

### OPERATION

The MA-RVA blocks flow from (2) to (1) until sufficient pressure is present at (2) to force the poppet to open and allow metered flow from (2) to (1). The cartridge offers smooth transition in response to load changes in common hydraulic circuits.

### FEATURES

- Hardened parts for long life.
- Industry common cavity.

### HYDRAULIC SYMBOL

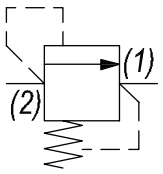


### PERFORMANCE

Actual Test Data (Cartridge Only)

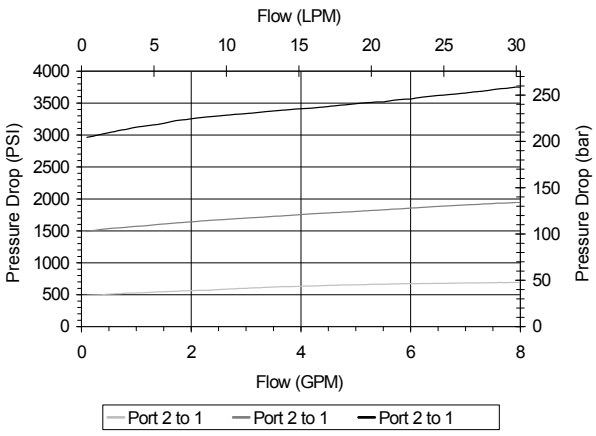


### VALVE SPECIFICATIONS

| | |
|---|---|
| Nominal Flow | 5 GPM (19 LPM) |
| Rated Operating Pressure | 3000 PSI (207 bar) |
| Viscosity Range | 36 to 3000 SSU (3 to 647 cSt) |
| Filtration | ISO 18/16/13 |
| Media Operating Temp. Range | -40° to 250°F (-40° to 120°C) |
| Weight | .39 lbs (.17 kg) |
| Operating Fluid Media | General Purpose Hydraulic Fluid |
| Cartridge Torque Requirements | 15 ft-lbs (20.3 Nm) |
| Cavity | MINI 2W |
| Cavity Form Tool (Finishing) | 40500003 |
| Seal Kit | 21191000 |

**WARNING:** *the specifications/application data shown in our catalogs and data sheets are intended only as a general guide for the product described (herein). Any specific application should not be undertaken without independent study, evaluation, and testing for suitability.*



Via Malavolti, 36 - 41122 Modena - ITALY - Phone +39 (059) 254895 - Fax +39 (059) 253512 - mail: tecnord@tecnord.com - **www.tecnord.com**

## DIMENSIONS

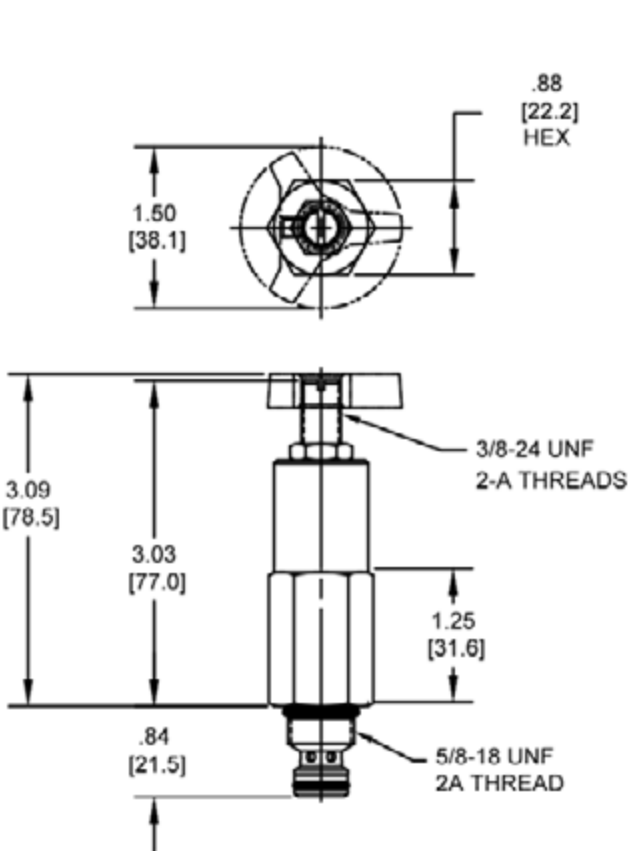


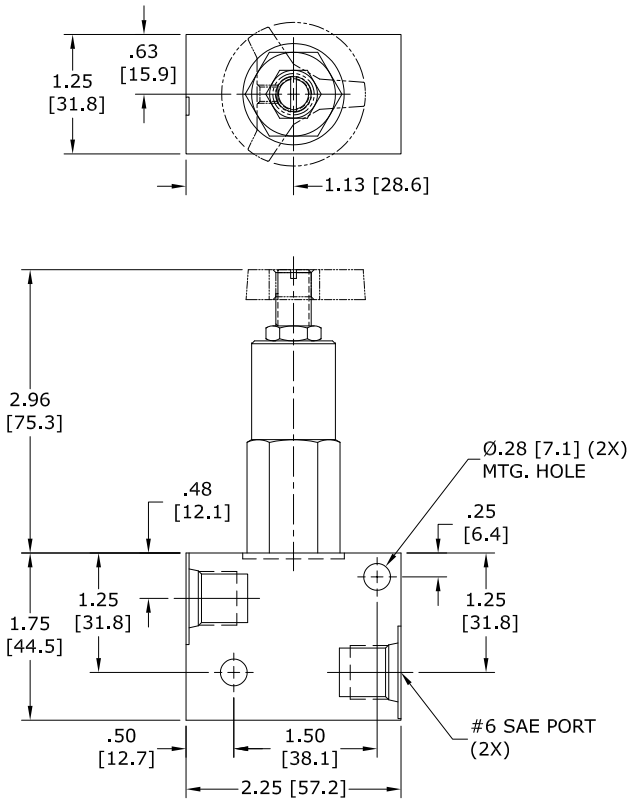


BODY WEIGHT: .40 lbs [.18 kg.]

*Body Weight: .29 lbs (.13 kg)*

## ORDERING INFORMATION

**MA-RVA – ____ – ____ – ____**

**OPTIONS**

| | |
|---|---|
| Buna Standard | **00** |
| Viton Standard | **V0** |
| Buna, Knob | **0K** |
| Viton, Knob | **VK** |

**PRESSURE RANGE**

| | |
|---|---|
| **0500** | 100 - 500 PSI |
| **1500** | 500 - 1500 PSI |
| **3000** | 1500 - 3000 PSI |

**BODIES**

| | |
|---|---|
| **Blank** | Without Body |
| **N** | 1/4" NPTF Ports |
| **S** | #6 SAE Ports |

**WARNING:** *the specifications/application data shown in our catalogs and data sheets are intended only as a general guide for the product described (herein). Any specific application should not be undertaken without independent study, evaluation, and testing for suitability.*



Via Malavolti, 36 - 41122 Modena - ITALY - Phone +39 (059) 254895 - Fax +39 (059) 253512 - mail: tecnord@tecnord.com - **www.tecnord.com**

## PB-RVA DIRECT ACTING RELIEF VALVE

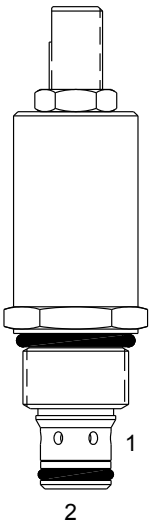


### DESCRIPTION

8 size, 3/4-16 thread, “Power” series, direct acting relief valve.

### OPERATION

The PB-RVA blocks flow from (2) to (1) until sufficient pressure is present at (2) to force the poppet to open and allow metered flow from (2) to (1). The cartridge offers smooth transition in response to load changes in common hydraulic circuits.

### FEATURES

- Hardened parts for long life.
- Industry common cavity.

### HYDRAULIC SYMBOL

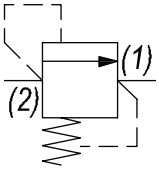


*Pressure at port (1) must not exceed 2500 PSI.*

### PERFORMANCE

Actual Test Data (Cartridge Only)

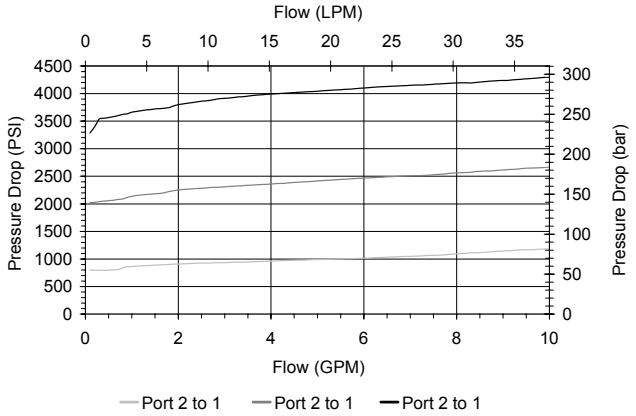


### VALVE SPECIFICATIONS

| | |
|---|---|
| Nominal Flow | 6 GPM (23 LPM) |
| Rated Operating Pressure | 3500 PSI (241 bar) |
| Viscosity Range | 36 to 3000 SSU (3 to 647 cSt) |
| Filtration | ISO 18/16/13 |
| Media Operating Temp. Range | -40° to 250°F (-40° to 120°C) |
| Weight | .30 lbs (.14 kg) |
| Operating Fluid Media | General Purpose Hydraulic Fluid |
| Cartridge Torque Requirements | 25 ft-lbs (34 Nm) |
| Cavity | POWER 2W |
| Cavity Form Tool (Finishing) | 40500005 |
| Seal Kit | 21191100 |

**WARNING:** *the specifications/application data shown in our catalogs and data sheets are intended only as a general guide for the product described (herein). Any specific application should not be undertaken without independent study, evaluation, and testing for suitability.*



Via Malavolti, 36 - 41122 Modena - ITALY - Phone +39 (059) 254895 - Fax +39 (059) 253512 - mail: tecnord@tecnord.com - **www.tecnord.com**

## DIMENSIONS

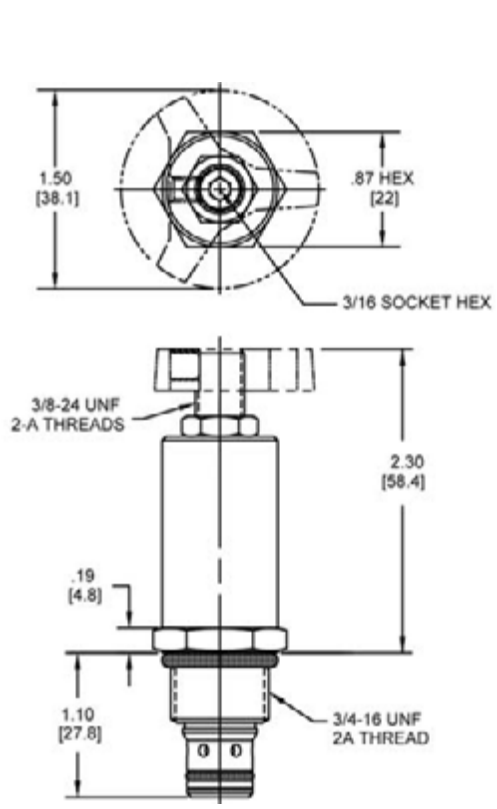


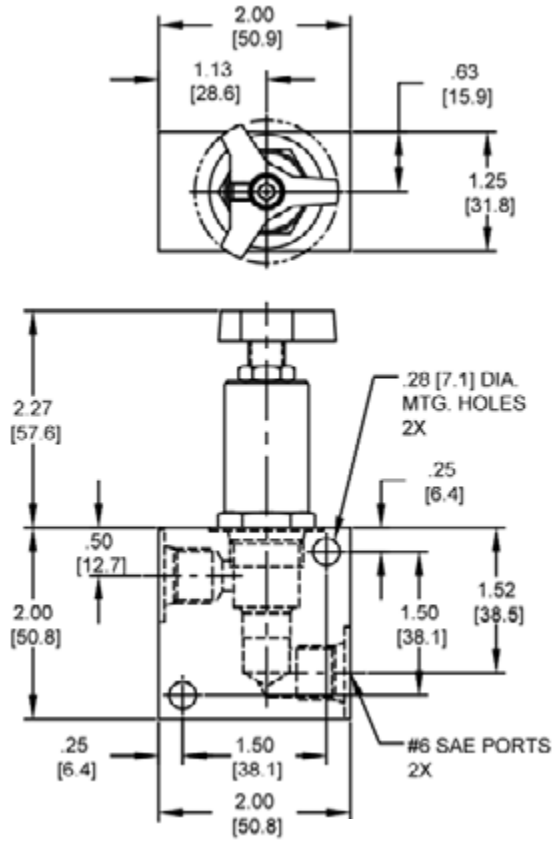


*Body Weight: .39 lbs (.18 kg)*

## ORDERING INFORMATION

**PB-RVA – ____ – ____ – ____**

**OPTIONS**

| | |
|---|---|
| Buna Standard | **00** |
| Viton Standard | **V0** |
| Buna, Knob | **0K** |
| Viton, Knob | **VK** |

**PRESSURE RANGE/SETTING**

| | |
|---|---|
| **0800** | 100 - 800 PSI |
| **2000** | 800 - 2000 PSI |
| **3500** | 2000 - 3500 PSI |

**BODIES**

| | |
|---|---|
| **Blank** | Without Body |
| **N** | 1/4" NPTF Ports |
| **S** | #6 SAE Ports |

**WARNING:** *the specifications/application data shown in our catalogs and data sheets are intended only as a general guide for the product described (herein). Any specific application should not be undertaken without independent study, evaluation, and testing for suitability.*



Via Malavolti, 36 - 41122 Modena - ITALY - Phone +39 (059) 254895 - Fax +39 (059) 253512 - mail: tecnord@tecnord.com - **www.tecnord.com**

## DE-RVA DIRECT ACTING RELIEF VALVE

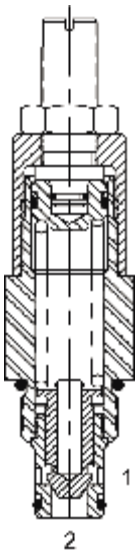


### DESCRIPTION

10 size, 7/8-14 thread, “Delta” series, direct acting relief valve.

### OPERATION

The DE-RVA blocks flow from (2) to (1) until sufficient pressure is present at (2) to force the poppet to open and allow metered flow from (2) to (1). The cartridge offers smooth transition in response to load changes in common hydraulic circuits.

### FEATURES

- Hardened parts for long life.
- Industry common cavity.

### HYDRAULIC SYMBOL

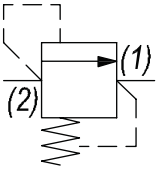


### PERFORMANCE

Actual Test Data (Cartridge Only)

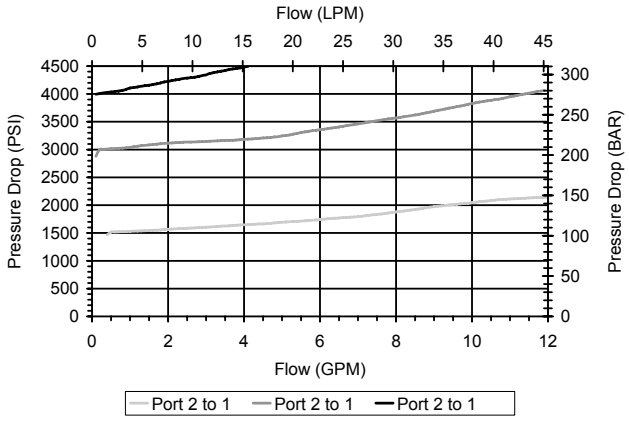


### VALVE SPECIFICATIONS

| | |
|---|---|
| Nominal Flow | 4 GPM (15.6 LPM) 4000 PSI<br>8 GPM (30 LPM) 3000 PSI |
| Rated Operating Pressure | 4000 PSI (276 bar) |
| Viscosity Range | 36 to 3000 SSU (3 to 647 cSt) |
| Filtration | ISO 18/16/13 |
| Media Operating Temp. Range | -40° to 250°F (-40° to 120°C) |
| Weight | .56 lbs (.25 kg) |
| Operating Fluid Media | General Purpose Hydraulic Fluid |
| Cartridge Torque Requirements | 30 ft-lbs (40.6 Nm) |
| Cavity | DELTA 2W |
| Cavity Form Tool (Finishing) | 40500000 |
| Seal Kit | 21191200 |

**WARNING:** *the specifications/application data shown in our catalogs and data sheets are intended only as a general guide for the product described (herein). Any specific application should not be undertaken without independent study, evaluation, and testing for suitability.*



Via Malavolti, 36 - 41122 Modena - ITALY - Phone +39 (059) 254895 - Fax +39 (059) 253512 - mail: tecnord@tecnord.com - **www.tecnord.com**

## DIMENSIONS

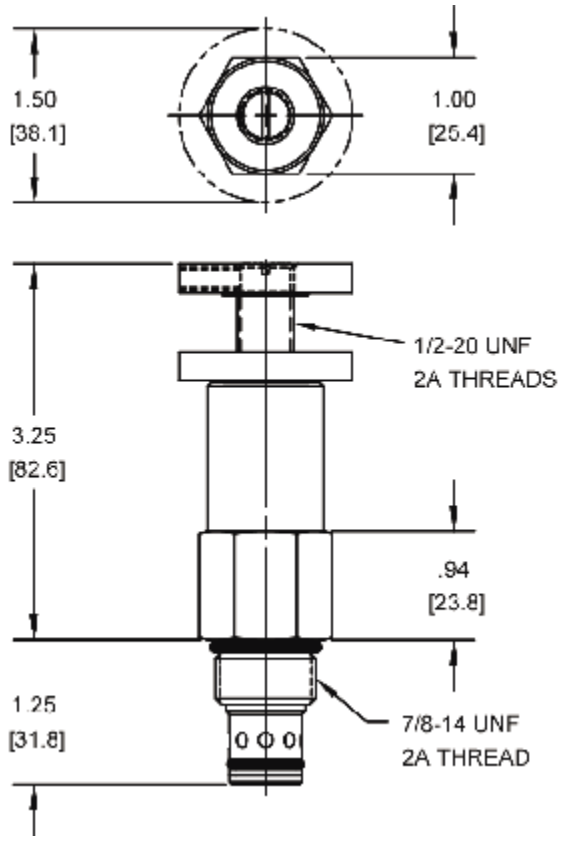


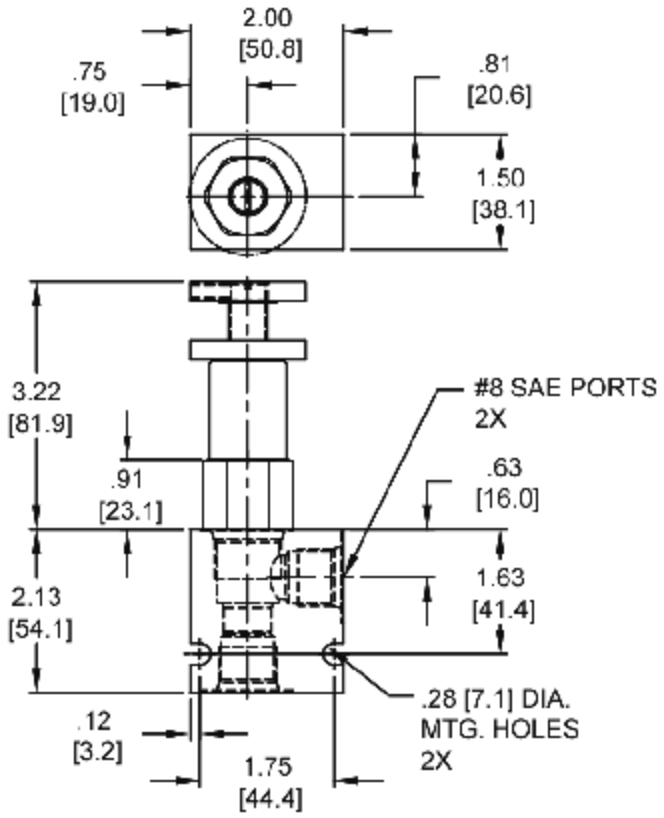


*Body Weight: .47 lbs (.21 kg)*

## ORDERING INFORMATION

**DE-RVA –** _____ **–** _____ **–** _____

**OPTIONS**

| | |
|---|---|
| Buna Standard | **00** |
| Viton Standard | **V0** |
| Buna, Knob | **0K** |
| Viton, Knob | **VK** |

**PRESSURE RANGE/SETTING**

| | |
|---|---|
| **1500** | 200 - 1500 PSI |
| **3000** | 1500 - 3000 PSI |
| **4000** | 2500 - 4000 PSI |

**BODIES**

| | |
|---|---|
| **Blank** | Without Body |
| **N** | 3/8" NPTF Ports |
| **S** | #8 SAE Ports |

**WARNING:** *the specifications/application data shown in our catalogs and data sheets are intended only as a general guide for the product described (herein). Any specific application should not be undertaken without independent study, evaluation, and testing for suitability.*



Via Malavolti, 36 - 41122 Modena - ITALY - Phone +39 (059) 254895 - Fax +39 (059) 253512 - mail: tecnord@tecnord.com - **www.tecnord.com**

## PB-RWA DIRECT ACTING RELIEF VALVE

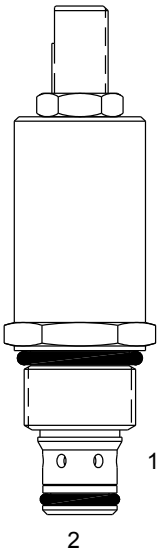


### DESCRIPTION

8 size, 3/4-16 thread, “Power” series, direct acting relief valve.

### OPERATION

The PB-RWA blocks flow from (2) to (1) until sufficient pressure is present at (2) to force the poppet to open and allow metered flow from (2) to (1). The cartridge offers smooth transition in response to load changes in common hydraulic circuits.

### FEATURES

- Hardened parts for long life.
- Industry common cavity.

### HYDRAULIC SYMBOL

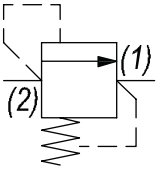


*Pressure at port (1) must not exceed 2500 PSI.*

### PERFORMANCE

Actual Test Data (Cartridge Only)

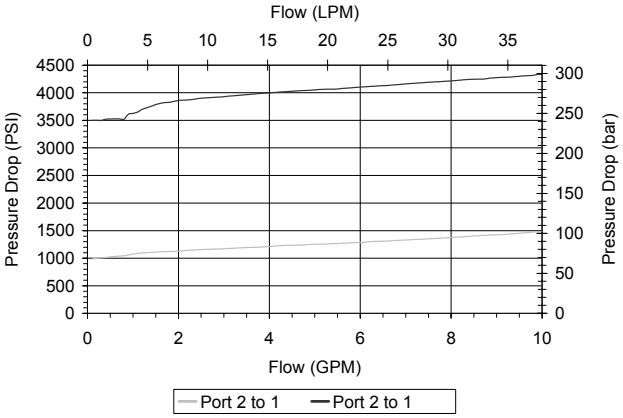


### VALVE SPECIFICATIONS

| | |
|---|---|
| Nominal Flow | 6 GPM (23 LPM) |
| Rated Operating Pressure | 3500 PSI (241 bar) |
| Viscosity Range | 36 to 3000 SSU (3 to 647 cSt) |
| Filtration | ISO 18/16/13 |
| Media Operating Temp. Range | -40° to 250°F (-40° to 120°C) |
| Weight | .31 lbs (.14 kg) |
| Operating Fluid Media | General Purpose Hydraulic Fluid |
| Cartridge Torque Requirements | 25 ft-lbs (34 Nm) |
| Cavity | POWER 2W |
| Cavity Form Tool (Finishing) | 40500005 |
| Seal Kit | 21191100 |

**WARNING:** *the specifications/application data shown in our catalogs and data sheets are intended only as a general guide for the product described (herein). Any specific application should not be undertaken without independent study, evaluation, and testing for suitability.*



Via Malavolti, 36 - 41122 Modena - ITALY - Phone +39 (059) 254895 - Fax +39 (059) 253512 - mail: tecnord@tecnord.com - **www.tecnord.com**

## DIMENSIONS

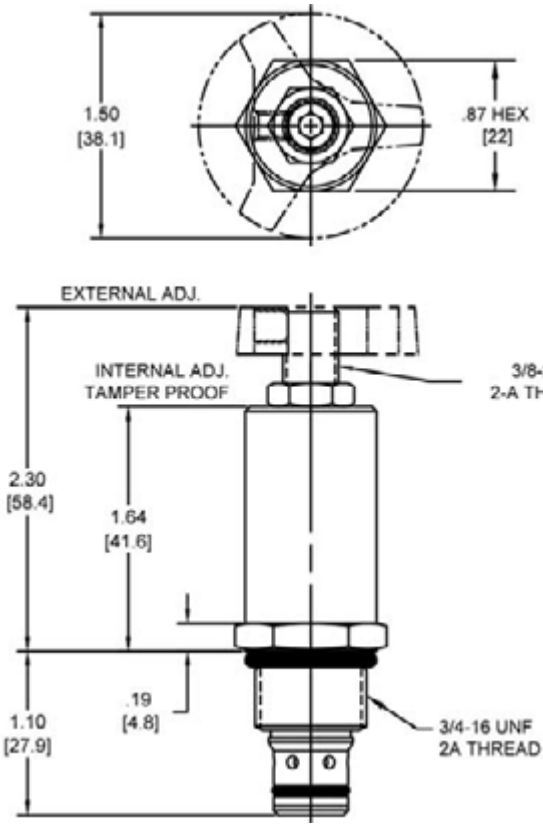


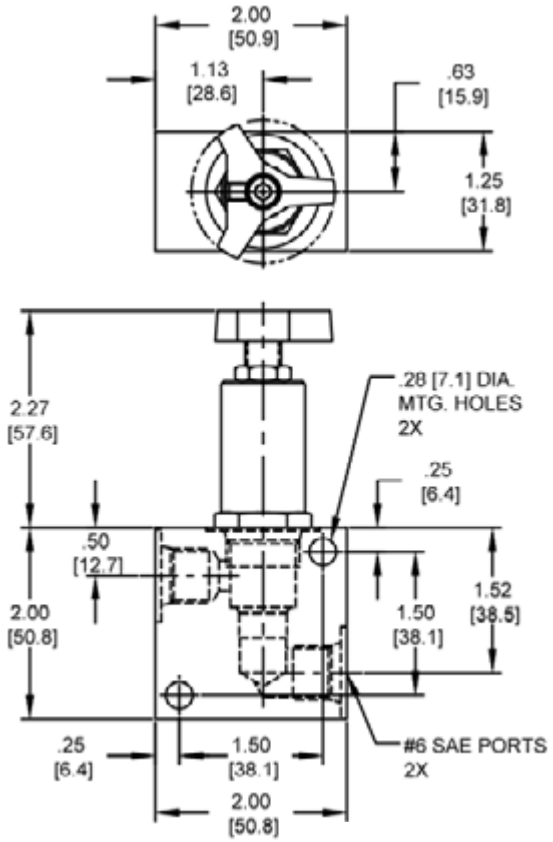


*Body Weight: .39 lbs (.18 kg)*

## ORDERING INFORMATION

**PB-RWA** – _____ – _____ – _____

**OPTIONS**

| | |
|---|---|
| External Adj. W/Locknut Buna | **00** |
| External Adj. W/Locknut Viton | **V0** |
| Buna, Knob | **0K** |
| Viton, Knob | **VK** |
| Internal Adjust Buna | **0I** |
| Internal Adjust Viton | **VI** |
| Tamper Proof Buna | **0T** |
| Tamper Proof Viton | **VT** |

**PRESSURE RANGE/SETTING**

**Ext./Int. Adjustment**

| | |
|---|---|
| **1000** | 100 - 1000 PSI |
| **3500** | 500 - 3500 PSI |

**Tamper Proof**
Fill in 4 Digit Pressure Setting
Example: 0500 - 500 PSI

**BODIES**

| | |
|---|---|
| **Blank** | Without Body |
| **N** | 1/4" NPTF Ports |
| **S** | #6 SAE Ports |

**WARNING:** *the specifications/application data shown in our catalogs and data sheets are intended only as a general guide for the product described (herein). Any specific application should not be undertaken without independent study, evaluation, and testing for suitability.*



Via Malavolti, 36 - 41122 Modena - ITALY - Phone +39 (059) 254895 - Fax +39 (059) 253512 - mail: tecnord@tecnord.com - **www.tecnord.com**

## DE-RWA DIRECT ACTING RELIEF VALVE

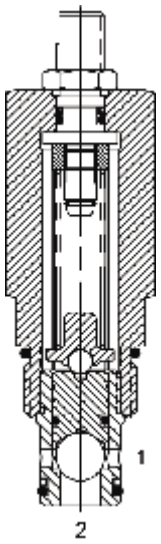


### DESCRIPTION

10 size, 7/8-14 thread, “Delta” series, direct acting relief valve.

### OPERATION

The DE-RWA blocks flow from (2) to (1) until sufficient pressure is present at (2) to force the poppet to open and allow metered flow from (2) to (1). The cartridge offers smooth transition in response to load changes in common hydraulic circuits.

### FEATURES

- Hardened parts for long life.
- Industry common cavity.

### HYDRAULIC SYMBOL

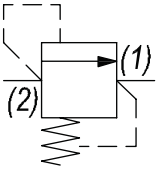


*For critical leakage applications consult factory.*

### PERFORMANCE

Actual Test Data (Cartridge Only)

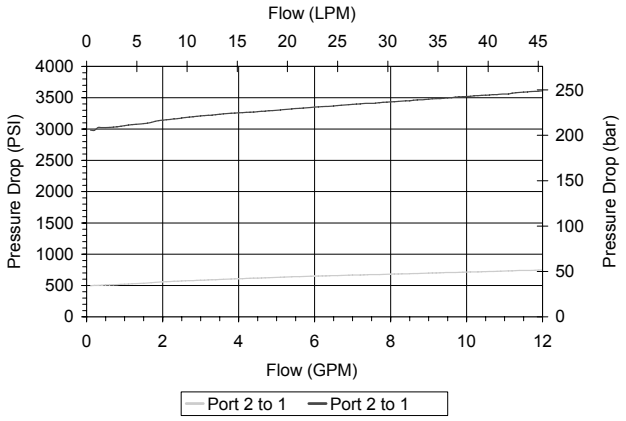


### VALVE SPECIFICATIONS

| | |
|---|---|
| Nominal Flow | 8 GPM (30 LPM) |
| Rated Operating Pressure | 4000 PSI (276 bar) |
| Viscosity Range | 36 to 3000 SSU (3 to 647 cSt) |
| Filtration | ISO 18/16/13 |
| Media Operating Temp. Range | -40° to 250°F (-40° to 120°C) |
| Weight | .51 lbs (.23 kg) |
| Operating Fluid Media | General Purpose Hydraulic Fluid |
| Cartridge Torque Requirements | 30 ft-lbs (40.6 Nm) |
| Cavity | DELTA 2W |
| Cavity Form Tool (Finishing) | 40500000 |
| Seal Kit | 21191200 |

**WARNING:** *the specifications/application data shown in our catalogs and data sheets are intended only as a general guide for the product described (herein). Any specific application should not be undertaken without independent study, evaluation, and testing for suitability.*



Via Malavolti, 36 - 41122 Modena - ITALY - Phone +39 (059) 254895 - Fax +39 (059) 253512 - mail: tecnord@tecnord.com - **www.tecnord.com**

## DIMENSIONS

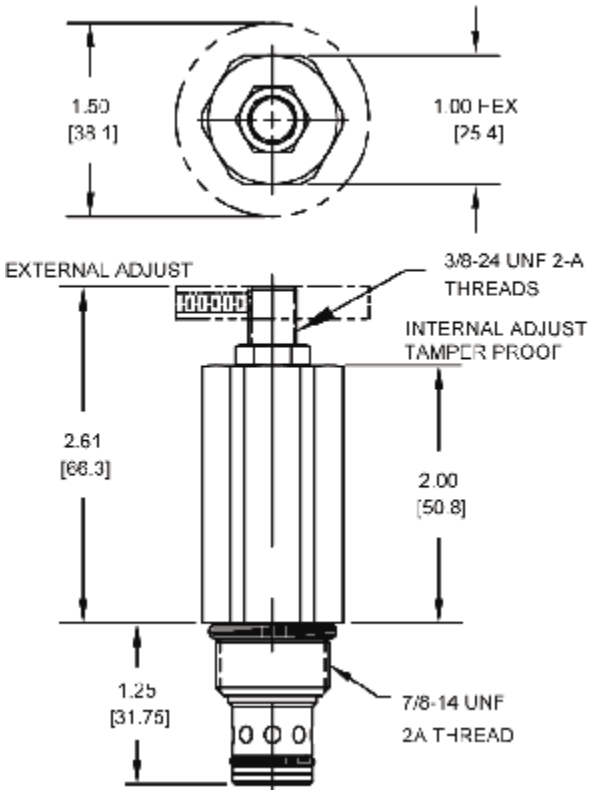


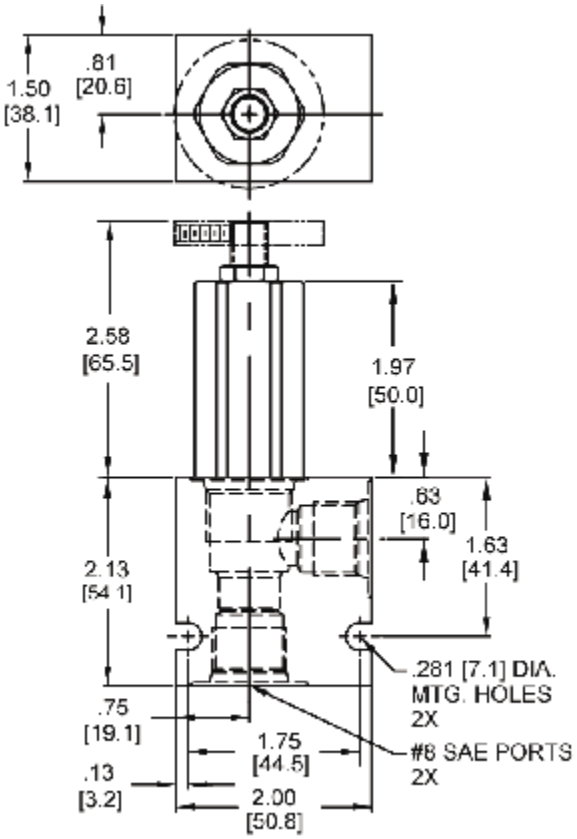


*Body Weight: .47 lbs (.21 kg)*

## ORDERING INFORMATION

**DE-RWA – _____ – _____ – _____**

**OPTIONS**

| | |
|---|---|
| Buna, External Adj. W/Locknut | **00** |
| Viton, External Adj. W/Locknut | **V0** |
| Buna, Knob | **0K** |
| Viton, Knob | **VK** |
| Buna, Internal Adjust | **0I** |
| Viton, Internal Adjust | **VI** |
| Buna, Tamper Proof | **0T** |
| Viton, Tamper Proof | **VT** |

**PRESSURE RANGE/SETTING**

**Ext./Int. Adjustment**

| | |
|---|---|
| **0500** | 100 - 500 PSI |
| **3000** | 100 - 3000 PSI |
| **4000** | 3000 - 4000 PSI |

**Tamper Proof**
Fill in 4 Digit Pressure Setting
Example: 0500 - 500 PSI

**BODIES**

| | |
|---|---|
| **Blank** | Without Body |
| **N** | 3/8" NPTF Ports |
| **S** | #8 SAE Ports |

**WARNING:** *the specifications/application data shown in our catalogs and data sheets are intended only as a general guide for the product described (herein). Any specific application should not be undertaken without independent study, evaluation, and testing for suitability.*



Via Malavolti, 36 - 41122 Modena - ITALY - Phone +39 (059) 254895 - Fax +39 (059) 253512 - mail: tecnord@tecnord.com - **www.tecnord.com**

## DE-RWF DIRECT ACTING RELIEF VALVE – FAST RESPONSE

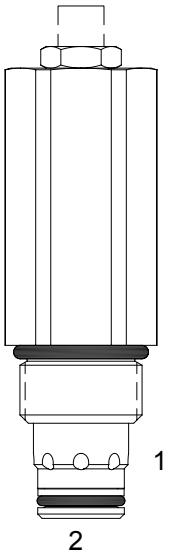


### DESCRIPTION

10 size, 7/8-14 thread, “Delta” series, direct acting relief valve.

### OPERATION

The DE-RWF blocks flow from (2) to (1) until sufficient pressure is present at (2) to force the poppet to open and allow metered flow from (2) to (1). The cartridge offers smooth transition in response to load changes in common hydraulic circuits.

### FEATURES

- Hardened parts for long life.
- Industry common cavity.

*Fast response direct acting poppet style relief valve.*
*For critical leakage applications consult factory.*

### HYDRAULIC SYMBOL

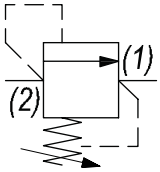


### PERFORMANCE

Actual Test Data (Cartridge Only)

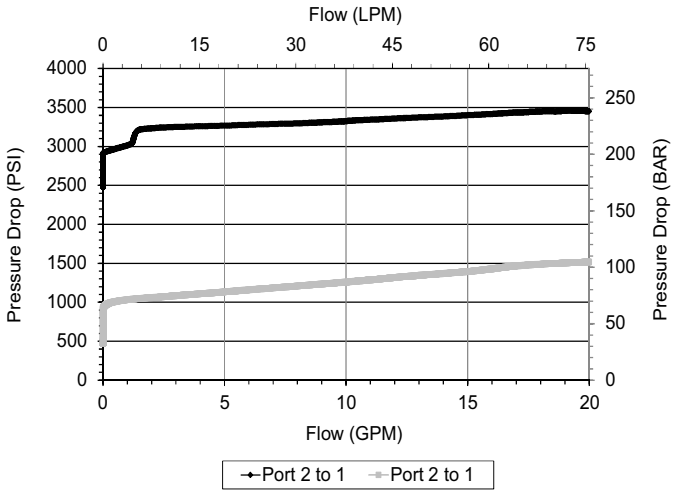


### VALVE SPECIFICATIONS

| | |
|---|---|
| Nominal Flow | 20 GPM (76 LPM) |
| Rated Operating Pressure | 4000 PSI (276 bar) |
| Viscosity Range | 36 to 3000 SSU (3 to 647 cSt) |
| Filtration | ISO 18/16/13 |
| Media Operating Temp. Range | -40° to 250°F (-40° to 120°C) |
| Weight | .51 lbs (.23 kg) |
| Operating Fluid Media | General Purpose Hydraulic Fluid |
| Cartridge Torque Requirements | 30 ft-lbs (40.6 Nm) |
| Cavity | DELTA 2W |
| Cavity Form Tool (Finishing) | 40500000 |
| Seal Kit | 21191200 |

**WARNING:** *the specifications/application data shown in our catalogs and data sheets are intended only as a general guide for the product described (herein). Any specific application should not be undertaken without independent study, evaluation, and testing for suitability.*



Via Malavolti, 36 - 41122 Modena - ITALY - Phone +39 (059) 254895 - Fax +39 (059) 253512 - mail: tecnord@tecnord.com - **www.tecnord.com**

## DIMENSIONS

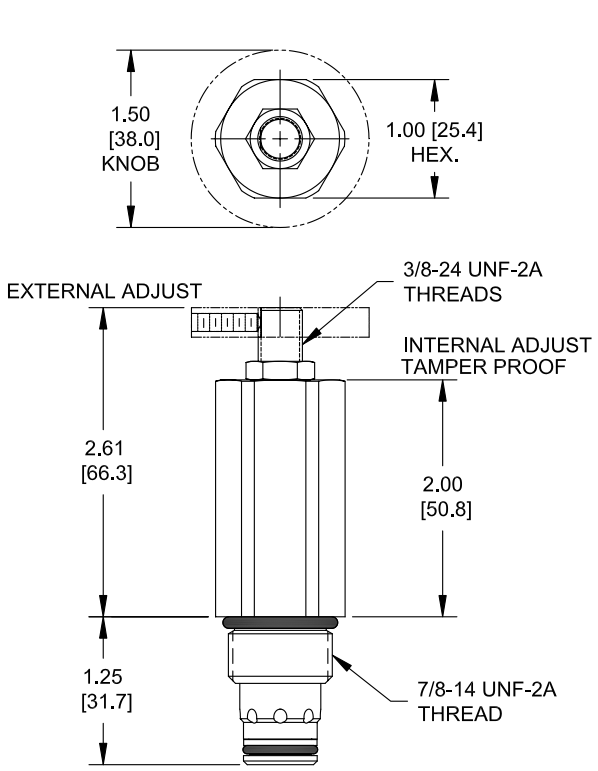


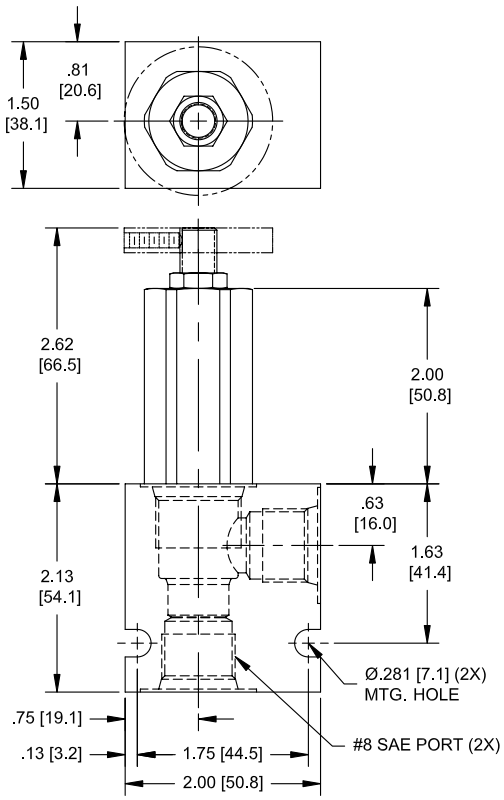


*Body Weight: .47 lbs (.21 kg)*

## ORDERING INFORMATION

**DE-RWF** – _____ – _____ – _____

**OPTIONS**

| | |
|---|---|
| Buna, External Adj. W/Locknut | **00** |
| Viton, External Adj. W/Locknut | **V0** |
| Buna, Knob | **0K** |
| Viton, Knob | **VK** |
| Buna, Internal Adjust | **0I** |
| Viton, Internal Adjust | **VI** |
| Buna, Tamper Proof | **0T** |
| Viton, Tamper Proof | **VT** |

**PRESSURE RANGE**

| | |
|---|---|
| **3000** | 500 - 3000 PSI |
| **4000** | 2000 - 4000 PSI |

**Tamper Proof**
Fill in 4 Digit Pressure Setting
Example: 2500 = 2500 PSI

**BODIES**

| | |
|---|---|
| **Blank** | Without Body |
| **N** | 3/8" NPTF Ports |
| **S** | #8 SAE Ports |

**WARNING:** *the specifications/application data shown in our catalogs and data sheets are intended only as a general guide for the product described (herein). Any specific application should not be undertaken without independent study, evaluation, and testing for suitability.*

## DE-RCD DIFFERENTIAL AREA RELIEF VALVE

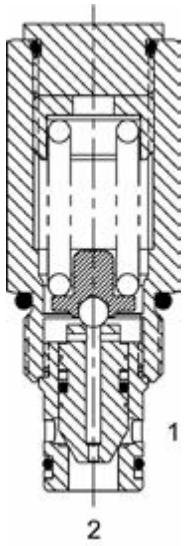


### DESCRIPTION

10 size, 7/8-14 thread, “Delta” series, differential area relief valve.

### OPERATION

The DE-RCD blocks flow from (1) to (2) until sufficient pressure is present at (1) to force the poppet to open and allow metered flow from (1) to (2). The cartridge offers smooth transition in response to load changes in common hydraulic circuits.

### FEATURES

- Hardened parts for long life.
- Industry common cavity.

### HYDRAULIC SYMBOL

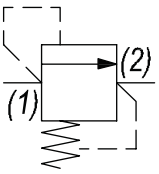


*Installation Space Saving Product. Cannot be field adjusted. Not recommended for crossover relief valve applications, use DE-RWD.*

### PERFORMANCE

Actual Test Data (Cartridge Only)

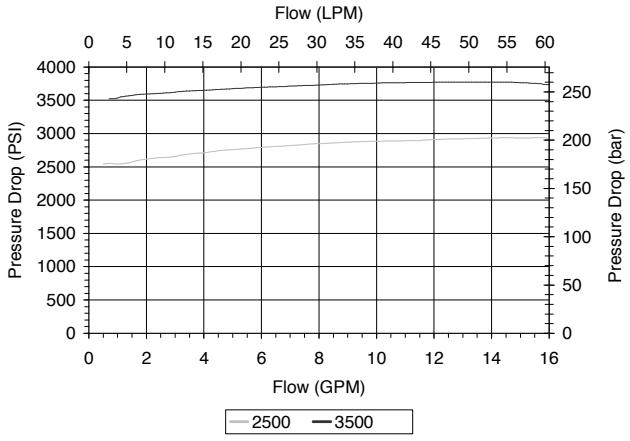


### VALVE SPECIFICATIONS

| | |
|---|---|
| Nominal Flow | 15 GPM (57 LPM) |
| Rated Operating Pressure | 3500 PSI (241 bar) |
| Viscosity Range | 36 to 3000 SSU (3 to 647 cSt) |
| Filtration | ISO 18/16/13 |
| Media Operating Temp. Range | -40° to 250°F (-40° to 120°C) |
| Weight | .37 lbs (.17 kg) |
| Operating Fluid Media | General Purpose Hydraulic Fluid |
| Cartridge Torque Requirements | 30 ft-lbs (40.6 Nm) |
| Cavity | DELTA 2W |
| Cavity Form Tool (Finishing) | 40500000 |
| Seal Kit | 21191200 |

**WARNING:** *the specifications/application data shown in our catalogs and data sheets are intended only as a general guide for the product described (herein). Any specific application should not be undertaken without independent study, evaluation, and testing for suitability.*



Via Malavolti, 36 - 41122 Modena - ITALY - Phone +39 (059) 254895 - Fax +39 (059) 253512 - mail: tecnord@tecnord.com - **www.tecnord.com**

## DIMENSIONS

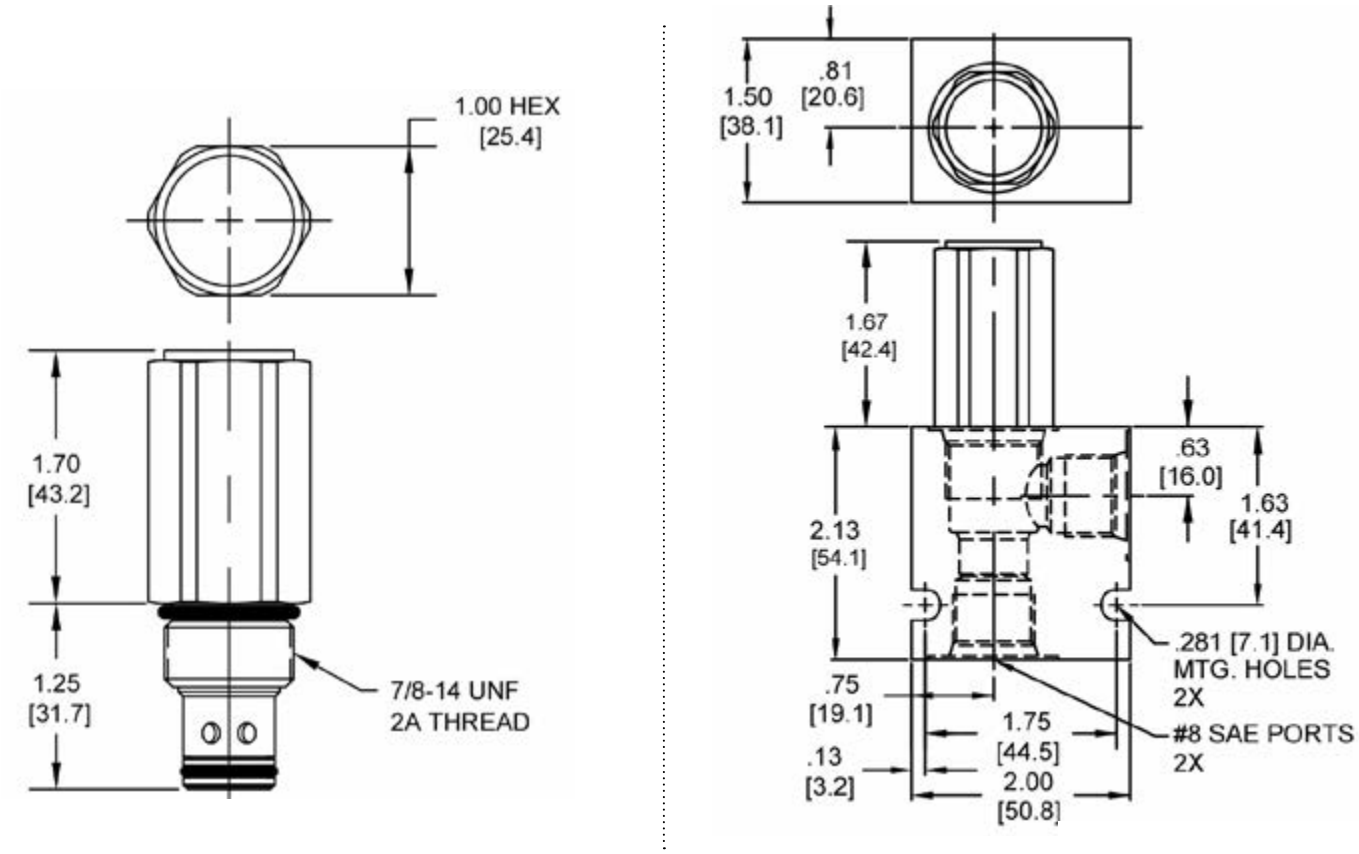


*Body Weight: .47 lbs (.21 kg)*

## ORDERING INFORMATION

**DE-RCD** – _____ – _____ – _____

**OPTIONS**

| | |
|---|---|
| Buna Standard | **00** |
| Viton Standard | **V0** |

**PRESSURE RANGE/SETTING**

| | |
|---|---|
| **2500** | 100 - 2500 PSI |
| **3500** | 250 - 3500 PSI |

**BODIES**

| | |
|---|---|
| **Blank** | Without Body |
| **N** | 3/8 NPTF Ports |
| **S** | #8 SAE Ports |

**WARNING:** *the specifications/application data shown in our catalogs and data sheets are intended only as a general guide for the product described (herein). Any specific application should not be undertaken without independent study, evaluation, and testing for suitability.*



Via Malavolti, 36 - 41122 Modena - ITALY - Phone +39 (059) 254895 - Fax +39 (059) 253512 - mail: tecnord@tecnord.com - **www.tecnord.com**

## PB-RVD DIFFERENTIAL AREA RELIEF VALVE

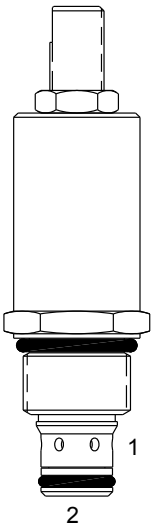


### DESCRIPTION

8 size, 3/4-16 thread, “Power” series, differential area relief valve.

### OPERATION

The PB-RVD blocks flow from (1) to (2) until sufficient pressure is present at (1) to force the poppet to open and allow metered flow from (1) to (2). The cartridge offers smooth transition in response to load changes in common hydraulic circuits.

### FEATURES

- Hardened parts for long life.
- Industry common cavity.

### HYDRAULIC SYMBOL

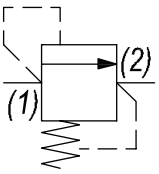


*Pressure at port (2) must not exceed 2500 PSI.*

### PERFORMANCE

Actual Test Data (Cartridge Only)

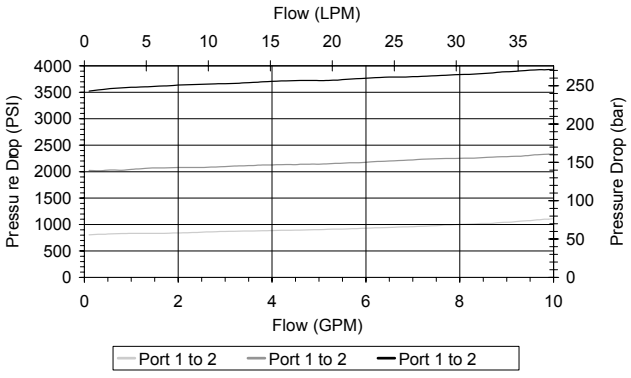


### VALVE SPECIFICATIONS

| | |
|---|---|
| Nominal Flow | 8 GPM (30 LPM) |
| Rated Operating Pressure | 3500 PSI (241 bar) |
| Viscosity Range | 36 to 3000 SSU (3 to 647 cSt) |
| Filtration | ISO 18/16/13 |
| Media Operating Temp. Range | -40° to 250°F (-40° to 120°C) |
| Weight | .31 lbs (.14 kg) |
| Operating Fluid Media | General Purpose Hydraulic Fluid |
| Cartridge Torque Requirements | 25 ft-lbs (34 Nm) |
| Cavity | POWER 2W |
| Cavity Form Tool (Finishing) | 40500005 |
| Seal Kit | 21191100 |

**WARNING:** *the specifications/application data shown in our catalogs and data sheets are intended only as a general guide for the product described (herein). Any specific application should not be undertaken without independent study, evaluation, and testing for suitability.*



Via Malavolti, 36 - 41122 Modena - ITALY - Phone +39 (059) 254895 - Fax +39 (059) 253512 - mail: tecnord@tecnord.com - **www.tecnord.com**

## DIMENSIONS

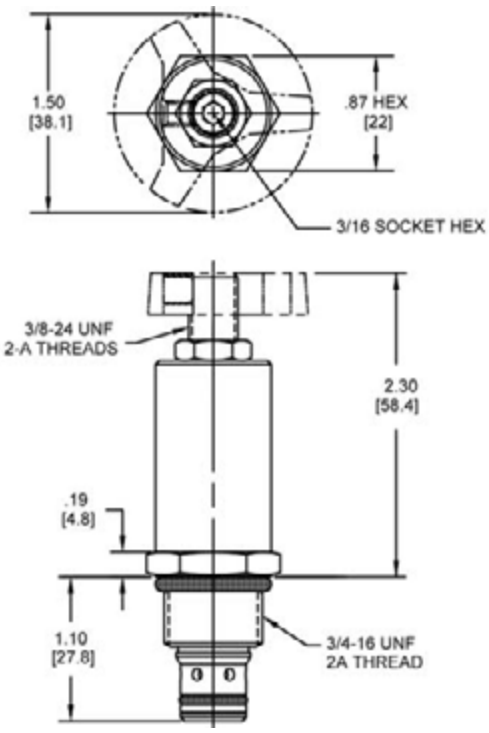


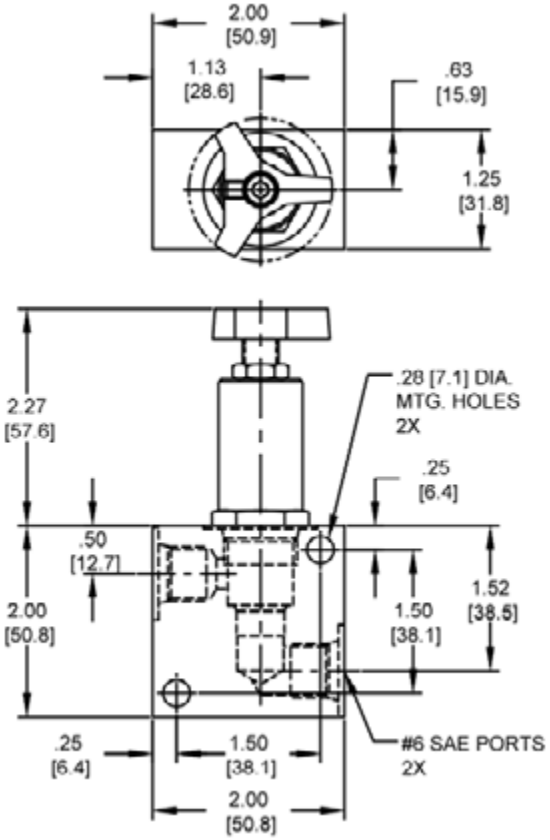


*Body Weight: .39 lbs (.18 kg)*

## ORDERING INFORMATION

**PB-RVD – ____ – ____ – ____**

**OPTIONS**

| | |
|---|---|
| Buna Standard | **00** |
| Viton Standard | **V0** |
| Buna, Knob | **0K** |
| Viton, Knob | **VK** |

**PRESSURE RANGE/SETTING**

| | |
|---|---|
| **0800** | 100 - 800 PSI |
| **2000** | 800 - 2000 PSI |
| **3500** | 2000 - 3500 PSI |

**BODIES**

| | |
|---|---|
| **Blank** | Without Body |
| **N** | 1/4” NPTF Ports |
| **S** | #6 SAE Ports |

**WARNING:** *the specifications/application data shown in our catalogs and data sheets are intended only as a general guide for the product described (herein). Any specific application should not be undertaken without independent study, evaluation, and testing for suitability.*



Via Malavolti, 36 - 41122 Modena - ITALY - Phone +39 (059) 254895 - Fax +39 (059) 253512 - mail: tecnord@tecnord.com - **www.tecnord.com**

## DE-RVD DIFFERENTIAL AREA RELIEF VALVE

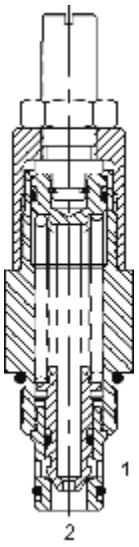


### DESCRIPTION

10 size, 7/8-14 thread, “Delta” series, differential area relief valve.

### OPERATION

The DE-RVD blocks flow from (1) to (2) until sufficient pressure is present at (1) to force the poppet to open and allow metered flow from (1) to (2). The cartridge offers smooth transition in response to load changes in common hydraulic circuits.

### FEATURES

- Hardened parts for long life.
- Industry common cavity.

*Low PSI/turn adjustment.*
*Good pressure vs. flow characteristic.*

### HYDRAULIC SYMBOL

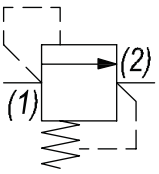


### PERFORMANCE

Actual Test Data (Cartridge Only)

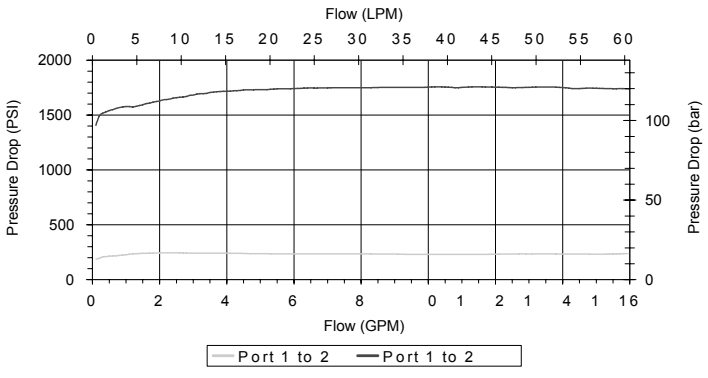


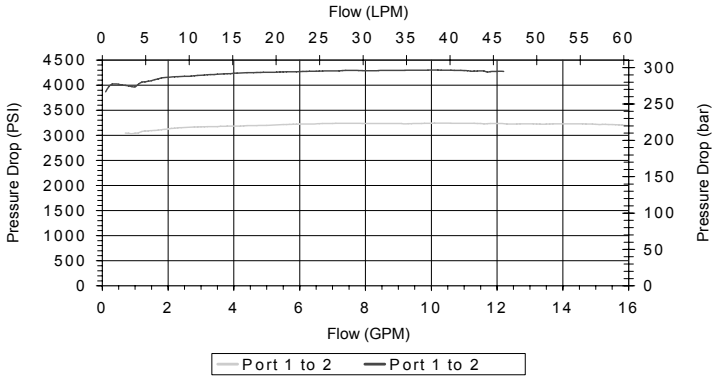


### VALVE SPECIFICATIONS

| | |
|---|---|
| Nominal Flow | 15 GPM (57 LPM) |
| Rated Operating Pressure | 4000 PSI (276 bar) |
| Viscosity Range | 36 to 3000 SSU (3 to 647 cSt) |
| Filtration | ISO 18/16/13 |
| Media Operating Temp. Range | -40° to 250°F (-40° to 120°C) |
| Weight | .57 lbs (.26 kg) |
| Operating Fluid Media | General Purpose Hydraulic Fluid |
| Cartridge Torque Requirements | 30 ft-lbs (40.6 Nm) |
| Cavity | DELTA 2W |
| Cavity Form Tool (Finishing) | 40500000 |
| Seal Kit | 21191200 |

**WARNING:** *the specifications/application data shown in our catalogs and data sheets are intended only as a general guide for the product described (herein). Any specific application should not be undertaken without independent study, evaluation, and testing for suitability.*



Via Malavolti, 36 - 41122 Modena - ITALY - Phone +39 (059) 254895 - Fax +39 (059) 253512 - mail: tecnord@tecnord.com - **www.tecnord.com**

## DIMENSIONS

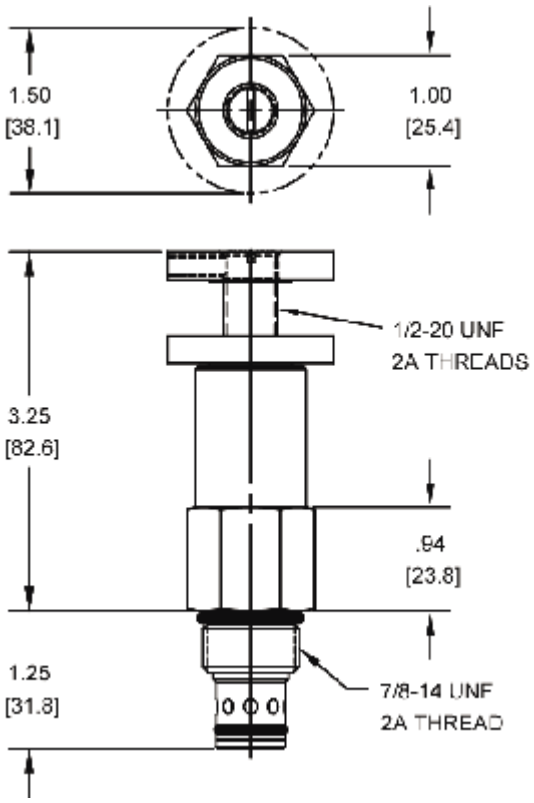


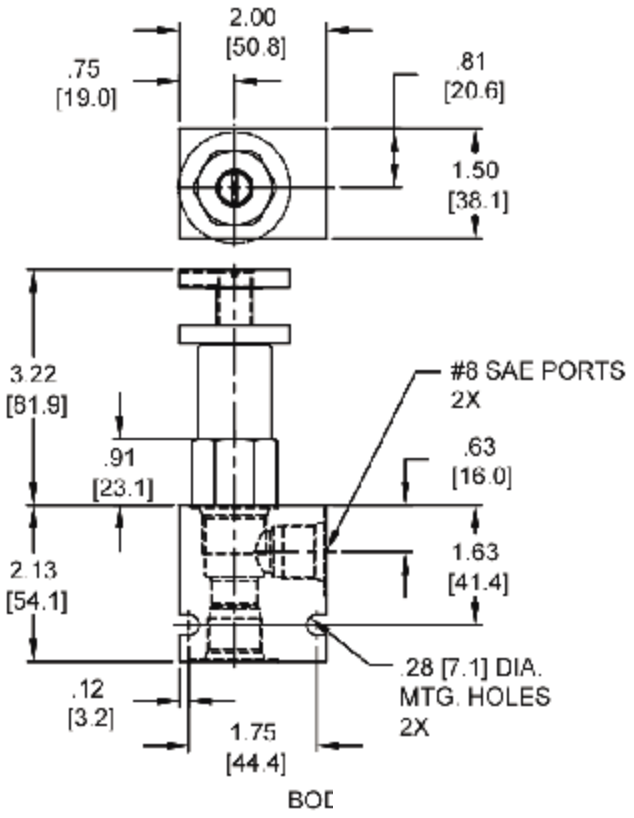


*Body Weight: .47 lbs (.21 kg)*

## ORDERING INFORMATION

**DE-RVD –** _____ **–** _____ **–** _____

**OPTIONS**

| | |
|---|---|
| Buna Standard | **00** |
| Viton Standard | **V0** |
| Buna, Screen | **A0** |
| Viton, Screen | **W0** |
| Buna, Knob | **0K** |
| Viton, Knob | **VK** |
| Buna, Knob, Screen | **AK** |
| Viton, Knob, Screen | **WK** |

**Note: use screen only if flow direction is from (1) to (2).**

**PRESSURE RANGE/SETTING**

| | |
|---|---|
| **0200** | 50 - 200 PSI |
| **1500** | 200 - 1500 PSI |
| **3000** | 1500 - 3000 PSI |
| **4000** | 2500 - 4000 PSI |

**BODIES**

| | |
|---|---|
| **Blank** | Without Body |
| **N** | 3/8" NPTF Ports |
| **S** | #8 SAE Ports |

**WARNING:** *the specifications/application data shown in our catalogs and data sheets are intended only as a general guide for the product described (herein). Any specific application should not be undertaken without independent study, evaluation, and testing for suitability.*



Via Malavolti, 36 - 41122 Modena - ITALY - Phone +39 (059) 254895 - Fax +39 (059) 253512 - mail: tecnord@tecnord.com - **www.tecnord.com**

## HE-RVD DIFFERENTIAL AREA RELIEF VALVE

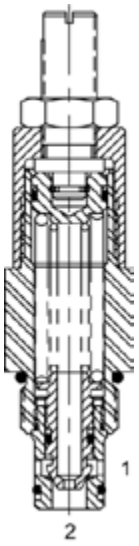


### DESCRIPTION

10 size, 7/8-14 thread, “Delta” series, differential area relief valve.

### OPERATION

The HE-RVD blocks flow from (1) to (2) until sufficient pressure is present at (1) to force the poppet to open and allow metered flow from (1) to (2). The cartridge offers smooth transition in response to load changes in common hydraulic circuits.

### FEATURES

- Hardened parts for long life.
- Industry common cavity.

*Good pressure vs. flow characteristic. Recommended Return Line Pressure as shown on Performance Data Graph. Undercut Cavity Recommended for Max flows (Consult Factory for Details).*

### HYDRAULIC SYMBOL

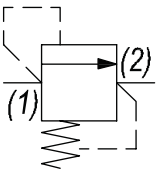


### PERFORMANCE

Actual Test Data (Cartridge Only)

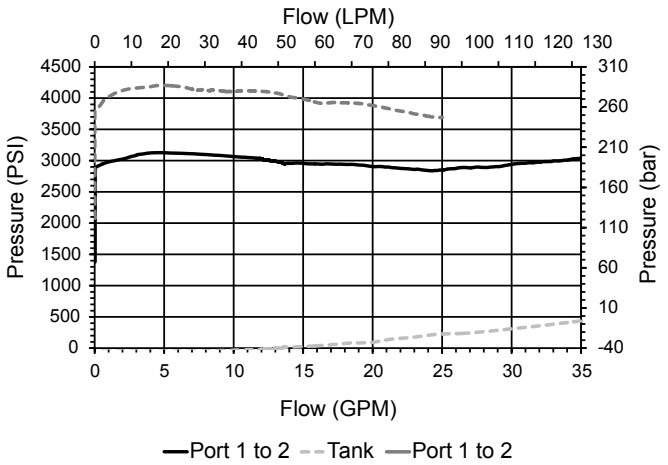


### VALVE SPECIFICATIONS

| | |
|---|---|
| Nominal Flow | 40 GPM (151 LPM) |
| Rated Operating Pressure | 5000 PSI (345 bar) |
| Viscosity Range | 36 to 3000 SSU (3 to 647 cSt) |
| Filtration | ISO 18/16/13 |
| Media Operating Temp. Range | -40° to 250°F (-40° to 120°C) |
| Weight | .57 lbs (.26 kg) |
| Operating Fluid Media | General Purpose Hydraulic Fluid |
| Cartridge Torque Requirements | 30 ft-lbs (40.6 Nm) |
| Cavity | DELTA 2W |
| Cavity Form Tool (Finishing) | 40500000 |
| Seal Kit | 21191200 |

**WARNING:** *the specifications/application data shown in our catalogs and data sheets are intended only as a general guide for the product described (herein). Any specific application should not be undertaken without independent study, evaluation, and testing for suitability.*



Via Malavolti, 36 - 41122 Modena - ITALY - Phone +39 (059) 254895 - Fax +39 (059) 253512 - mail: tecnord@tecnord.com - **www.tecnord.com**

## DIMENSIONS

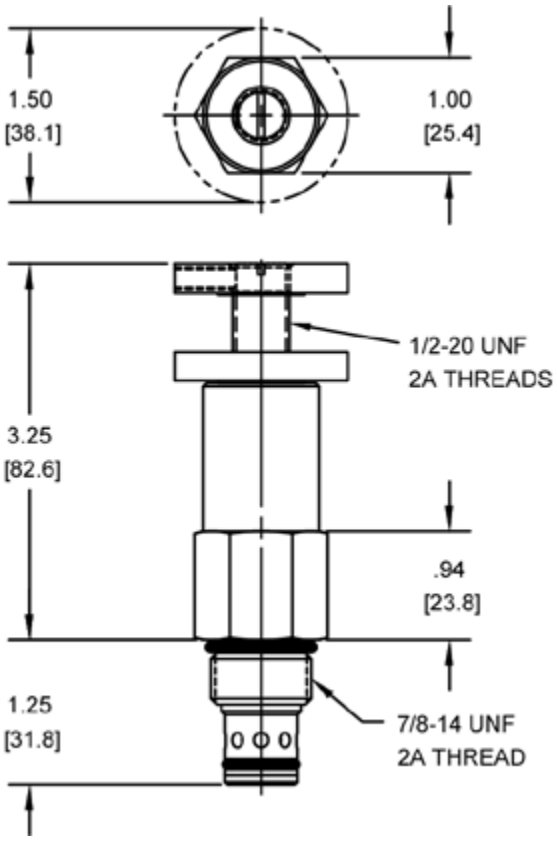


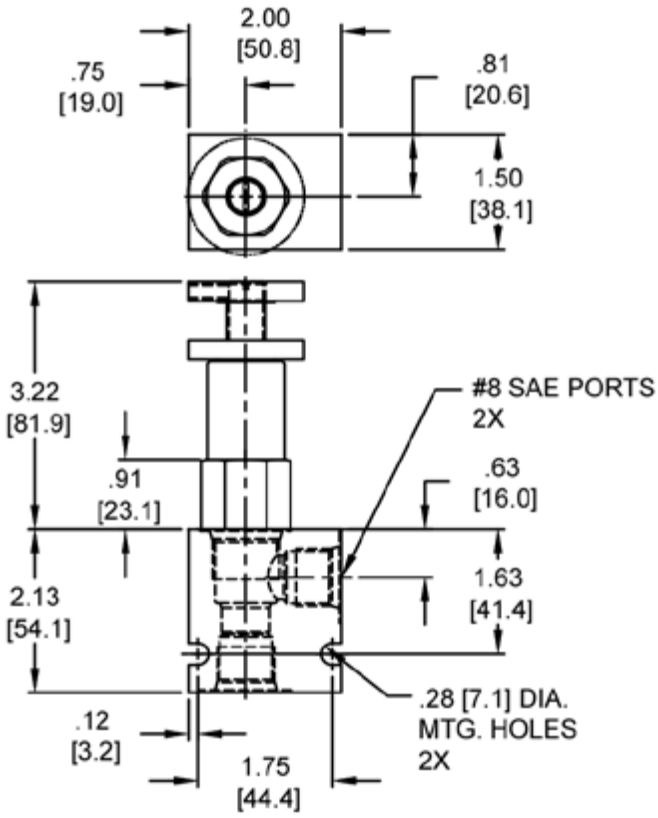


*Body Weight: .47 lbs (.21 kg)*

## ORDERING INFORMATION

**HE-RVD –** _____ **–** _____ **–** _____

**OPTIONS**

| | |
|---|---|
| Buna Standard | **00** |
| Viton Standard | **V0** |
| Buna, Screen | **A0** |
| Viton, Screen | **W0** |
| Buna, Knob | **0K** |
| Viton, Knob | **VK** |
| Buna, Knob, Screen | **AK** |
| Viton, Knob, Screen | **WK** |

**Note: use screen only if flow direction is from (1) to (2).**

**PRESSURE RANGE/SETTING**

| | |
|---|---|
| **5000** | 1000 - 5000 PSI |

**BODIES**

| | |
|---|---|
| **Blank** | Without Body |
| **N** | 3/8" NPTF Ports |
| **S** | #8 SAE Ports |

**Note: aluminum NOT durability rated for 4000 PSI. Consult factory for options.**

**WARNING:** *the specifications/application data shown in our catalogs and data sheets are intended only as a general guide for the product described (herein). Any specific application should not be undertaken without independent study, evaluation, and testing for suitability.*



Via Malavolti, 36 - 41122 Modena - ITALY - Phone +39 (059) 254895 - Fax +39 (059) 253512 - mail: tecnord@tecnord.com - **www.tecnord.com**

## PB-RWD DIFFERENTIAL AREA RELIEF VALVE

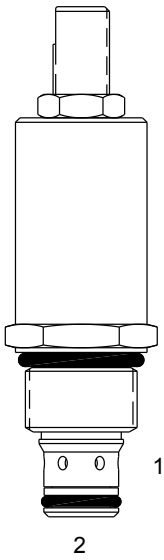


### DESCRIPTION

8 size, 3/4-16 thread, “Power” series, differential area relief valve.

### OPERATION

The PB-RWD blocks flow from (1) to (2) until sufficient pressure is present at (1) to force the poppet to open and allow metered flow from (1) to (2). The cartridge offers smooth transition in response to load changes in common hydraulic circuits.

### FEATURES

- Hardened parts for long life.
- Industry common cavity.

### HYDRAULIC SYMBOL

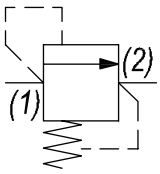


*Pressure at port (2) must not exceed 2500 PSI.*

### PERFORMANCE

Actual Test Data (Cartridge Only)

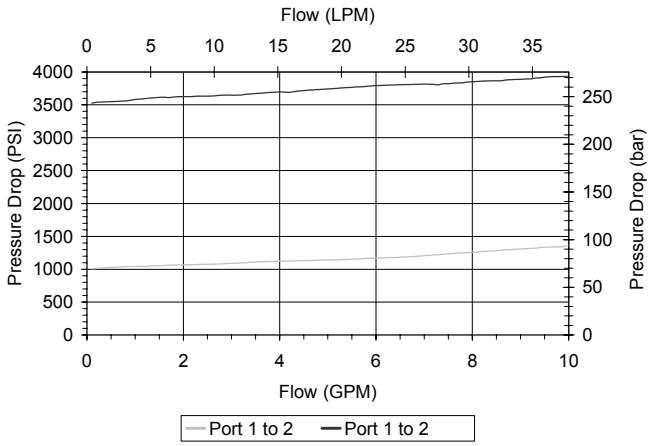


### VALVE SPECIFICATIONS

| | |
|---|---|
| Nominal Flow | 8 GPM (30 LPM) |
| Rated Operating Pressure | 3500 PSI (241 bar) |
| Viscosity Range | 36 to 3000 SSU (3 to 647 cSt) |
| Filtration | ISO 18/16/13 |
| Media Operating Temp. Range | -40° to 250°F (-40° to 120°C) |
| Weight | .32 lbs (.15 kg) |
| Operating Fluid Media | General Purpose Hydraulic Fluid |
| Cartridge Torque Requirements | 25 ft-lbs (34 Nm) |
| Cavity | POWER 2W |
| Cavity Form Tool (Finishing) | 40500005 |
| Seal Kit | 21191100 |

**WARNING:** *the specifications/application data shown in our catalogs and data sheets are intended only as a general guide for the product described (herein). Any specific application should not be undertaken without independent study, evaluation, and testing for suitability.*



Via Malavolti, 36 - 41122 Modena - ITALY - Phone +39 (059) 254895 - Fax +39 (059) 253512 - mail: tecnord@tecnord.com - **www.tecnord.com**

## DIMENSIONS

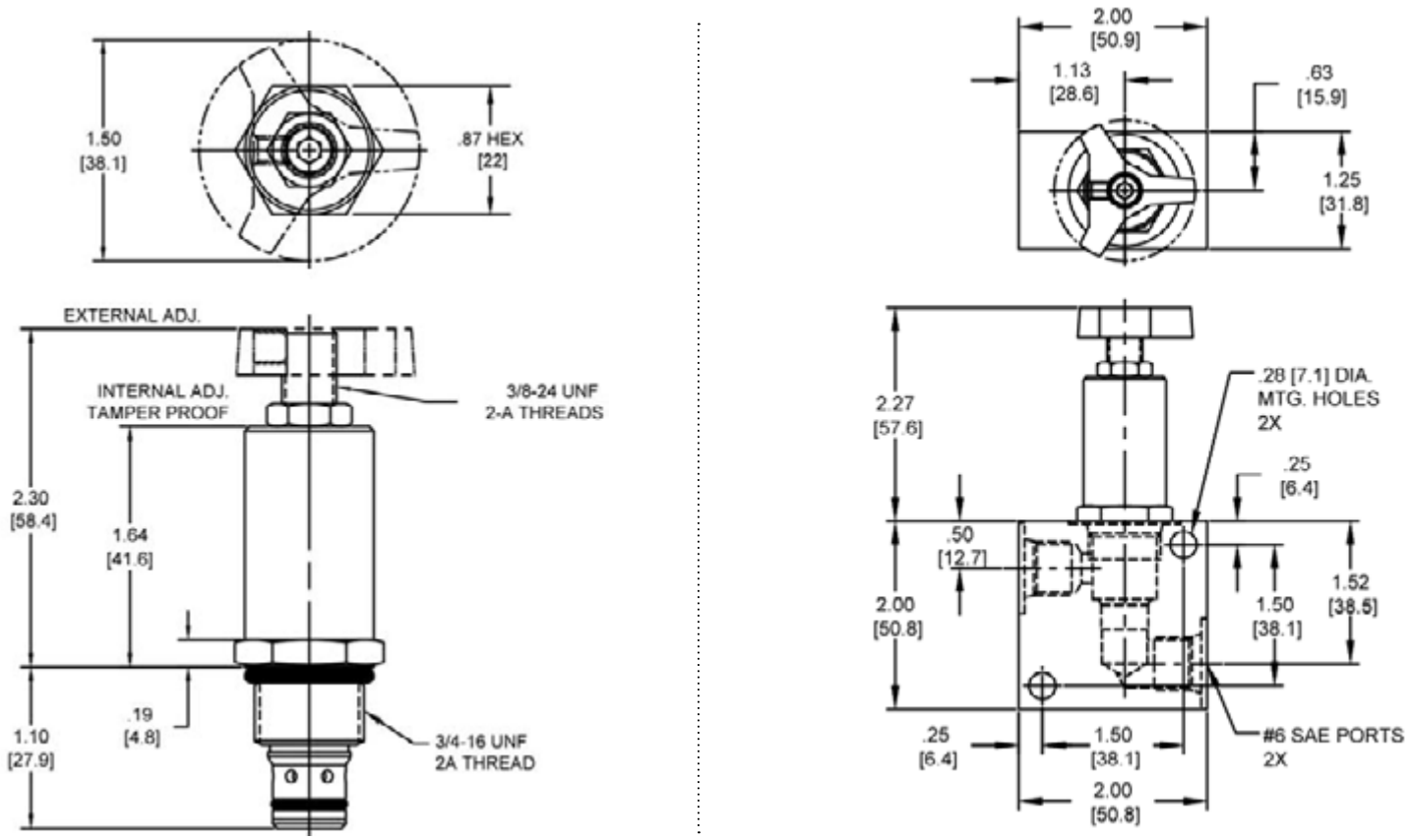


*Body Weight: .39 lbs (.18 kg)*

## ORDERING INFORMATION

**PB-RWD** – _____ – _____ – _____

**OPTIONS**

| | |
|---|---|
| External Adj. W/Locknut Buna | **00** |
| External Adj. W/Locknut Viton | **V0** |
| Buna, Knob | **0K** |
| Viton, Knob | **VK** |
| Internal Adjust Buna | **0I** |
| Internal Adjust Viton | **VI** |
| Tamper Proof Buna | **0T** |
| Tamper Proof Viton | **VT** |

**PRESSURE RANGE/SETTING**

**Ext./Int. Adjustable**

| | |
|---|---|
| **1000** | 100 - 1000 PSI |
| **3500** | 500 - 3500 PSI |

**Tamper Proof**
Fill in 4 Digit Pressure Setting
Example: 0500 - 500 PSI

**BODIES**

| | |
|---|---|
| **Blank** | Without Body |
| **N** | 1/4" NPTF Ports |
| **S** | #6 SAE Ports |

**WARNING:** *the specifications/application data shown in our catalogs and data sheets are intended only as a general guide for the product described (herein). Any specific application should not be undertaken without independent study, evaluation, and testing for suitability.*



Via Malavolti, 36 - 41122 Modena - ITALY - Phone +39 (059) 254895 - Fax +39 (059) 253512 - mail: tecnord@tecnord.com - **www.tecnord.com**

## DE-RWD DIFFERENTIAL AREA RELIEF VALVE

### DESCRIPTION

10 size, 7/8-14 thread, “Delta” series, differential area relief valve.

### OPERATION

The DE-RWD blocks flow from (1) to (2) until sufficient pressure is present at (1) to force the poppet to open and allow metered flow from (1) to (2).

### FEATURES

- Hardened parts for long life.
- Industry common cavity.

### HYDRAULIC SYMBOL

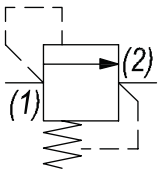


### PERFORMANCE

Actual Test Data (Cartridge Only)

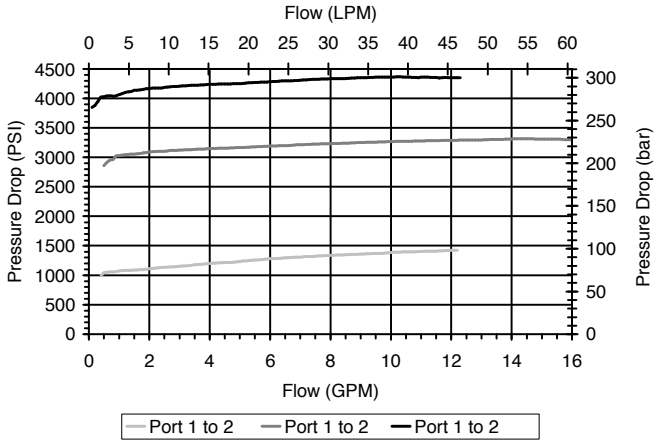


### VALVE SPECIFICATIONS

| | |
|---|---|
| Nominal Flow | 15 GPM (57 LPM) |
| Rated Operating Pressure | 4000 PSI (276 bar) |
| Viscosity Range | 36 to 3000 SSU (3 to 647 cSt) |
| Filtration | ISO 18/16/13 |
| Media Operating Temp. Range | -40° to 250°F (-40° to 120°C) |
| Weight | .55 lbs (.25 kg) |
| Operating Fluid Media | General Purpose Hydraulic Fluid |
| Cartridge Torque Requirements | 30 ft-lbs (40.6 Nm) |
| Cavity | DELTA 2W |
| Cavity Form Tool (Finishing) | 40500000 |
| Seal Kit | 21191200 |

**WARNING:** *the specifications/application data shown in our catalogs and data sheets are intended only as a general guide for the product described (herein). Any specific application should not be undertaken without independent study, evaluation, and testing for suitability.*



Via Malavolti, 36 - 41122 Modena - ITALY - Phone +39 (059) 254895 - Fax +39 (059) 253512 - mail: tecnord@tecnord.com - **www.tecnord.com**

## DIMENSIONS

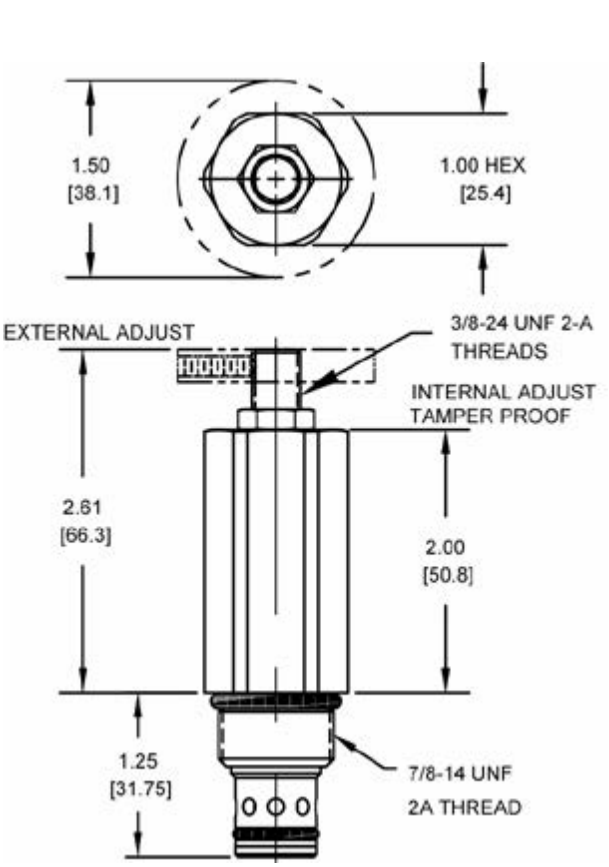


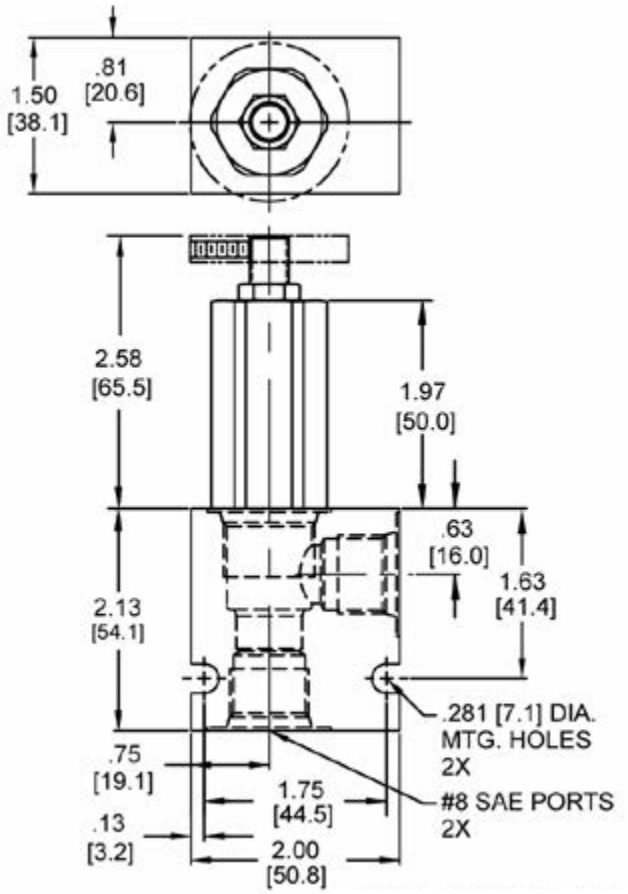


*Body Weight: .47 lbs (.21 kg)*

## ORDERING INFORMATION

**DE-RWD – _____ – _____ – _____**

**OPTIONS**

| | |
|---|---|
| Buna, External Adj. W/Locknut | **00** |
| Viton, External Adj. W/Locknut | **V0** |
| Buna, Knob | **0K** |
| Viton, Knob | **VK** |
| Buna, Internal Adjust | **0I** |
| Viton, Internal Adjust | **VI** |
| Buna, Tamper Proof | **0T** |
| Viton, Tamper Proof | **VT** |

**BODIES**

| | |
|---|---|
| **Blank** | Without Body |
| **N** | 3/8" NPTF Ports |
| **S** | #8 SAE Ports |

**PRESSURE RANGE/SETTING**

**Ext./Int. Adjustable**

| | |
|---|---|
| **1000** | 100 - 1000 PSI |
| **3000** | 100 - 3000 PSI |
| **4000** | 3000 - 4000 PSI |

**Tamper Proof**
Fill in 4 Digit Pressure Setting
Example: 0500 - 500 PSI

**Note: aluminum NOT durability rated for 4000 PSI. Consult factory for options.**

**WARNING:** *the specifications/application data shown in our catalogs and data sheets are intended only as a general guide for the product described (herein). Any specific application should not be undertaken without independent study, evaluation, and testing for suitability.*



Via Malavolti, 36 - 41122 Modena - ITALY - Phone +39 (059) 254895 - Fax +39 (059) 253512 - mail: tecnord@tecnord.com - **www.tecnord.com**

**WARNING:** *the specifications/application data shown in our catalogs and data sheets are intended only as a general guide for the product described (herein). Any specific application should not be undertaken without independent study, evaluation, and testing for suitability.*



Via Malavolti, 36 - 41122 Modena - ITALY - Phone +39 (059) 254895 - Fax +39 (059) 253512 - mail: tecnord@tecnord.com - **www.tecnord.com**

## PILOT OPERATED RELIEF VALVES

| | GPM | PSI | LPM | BAR | CAVITY | MODEL | PAGE |
|---|---|---|---|---|---|---|---|
| 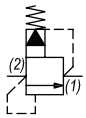 | 20 | 4000 | 76 | 276 | 7/8-14 | **DE-RVP** | MP32 |
| | 20 | 5000 | 76 | 345 | 1 1/16-12 | **HT-RVP** | MP34 |
| 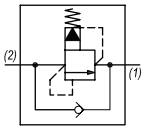 | 15 | 4000 | 57 | 276 | 7/8-14 | **DE-RVR** | MP36 |
| | 40 | 3500 | 151 | 241 | 1 5/16-12 | **SJ-RVR** | MP38 |
| 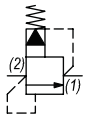 | 15 | 4000 | 57 | 276 | 7/8-14 | **DE-RWP** | MP40 |
| 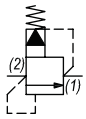 | 40 | 5000 | 151 | 345 | 7/8-14 | **HE-RWP** | MP42 |
| 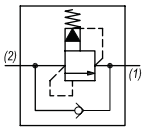 | 15 | 4000 | 57 | 276 | 7/8-14 | **DE-RWR** | MP44 |

## TYPICAL SCHEMATIC

Typical application for the RVP and RWP is to protect pump or system. Typical application for the RWR and RVR, is to be used as counterbalance in a system where positive hydraulic locking is not required. In this schematic positive locking is done by using a P. O. check valve.

**WARNING:** *the specifications/application data shown in our catalogs and data sheets are intended only as a general guide for the product described (herein). Any specific application should not be undertaken without independent study, evaluation, and testing for suitability.*



Via Malavolti, 36 - 41122 Modena - ITALY - Phone +39 (059) 254895 - Fax +39 (059) 253512 - mail: tecnord@tecnord.com - **www.tecnord.com**

## DE-RVP PILOT OPERATED RELIEF VALVE

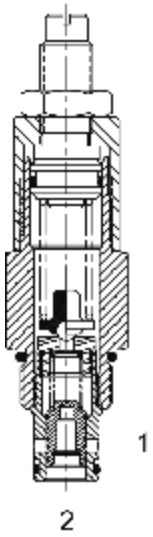


### DESCRIPTION

10 size, 7/8-14 thread, “Delta” series, pilot operated relief valve.

### OPERATION

The DE-RVP blocks flow from (2) to (1) until sufficient pressure is present at (2) to force the pilot stage open, allowing the main stage to shift, opening (2) to (1). The cartridge offers smooth transition in response to load changes in common hydraulic circuits.

### FEATURES

- Hardened parts for long life.
- Industry common cavity.

### HYDRAULIC SYMBOL

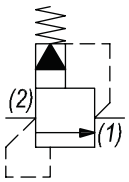


### PERFORMANCE

Actual Test Data (Cartridge Only)

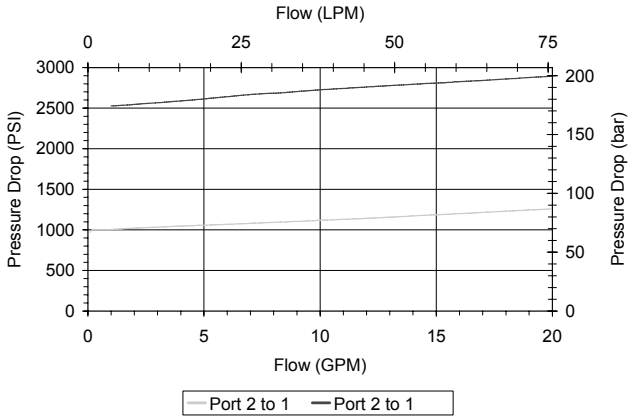


### VALVE SPECIFICATIONS

| | |
|---|---|
| Nominal Flow | 20 GPM (76 LPM) |
| Rated Operating Pressure | 4000 PSI (276 bar) |
| Viscosity Range | 36 to 3000 SSU (3 to 647 cSt) |
| Filtration | ISO 18/16/13 |
| Media Operating Temp. Range | -40° to 250°F (-40° to 120°C) |
| Weight | .56 lbs (.25 kg) |
| Operating Fluid Media | General Purpose Hydraulic Fluid |
| Cartridge Torque Requirements | 30 ft-lbs (40.6 Nm) |
| Cavity | DELTA 2W |
| Cavity Form Tool (Finishing) | 40500000 |
| Seal Kit | 21191200 |

**WARNING:** *the specifications/application data shown in our catalogs and data sheets are intended only as a general guide for the product described (herein). Any specific application should not be undertaken without independent study, evaluation, and testing for suitability.*



Via Malavolti, 36 - 41122 Modena - ITALY - Phone +39 (059) 254895 - Fax +39 (059) 253512 - mail: tecnord@tecnord.com - **www.tecnord.com**

## DIMENSIONS

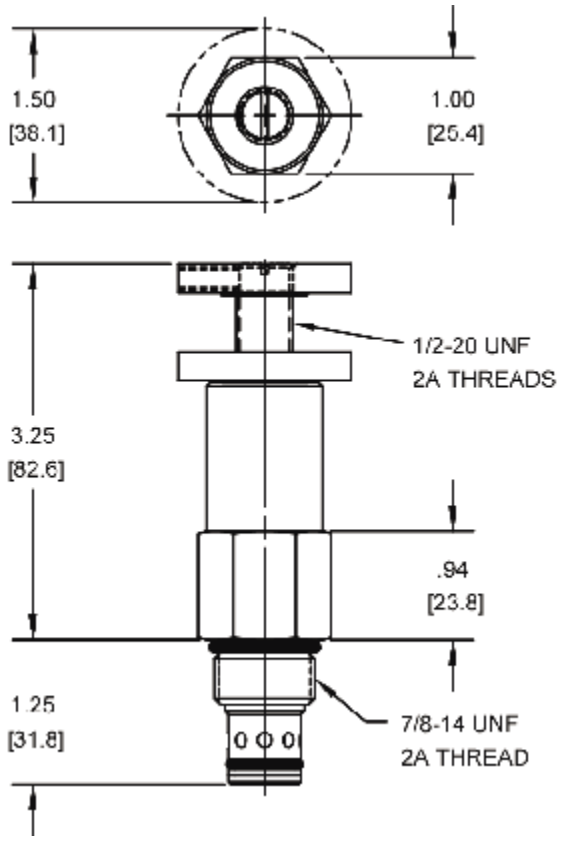


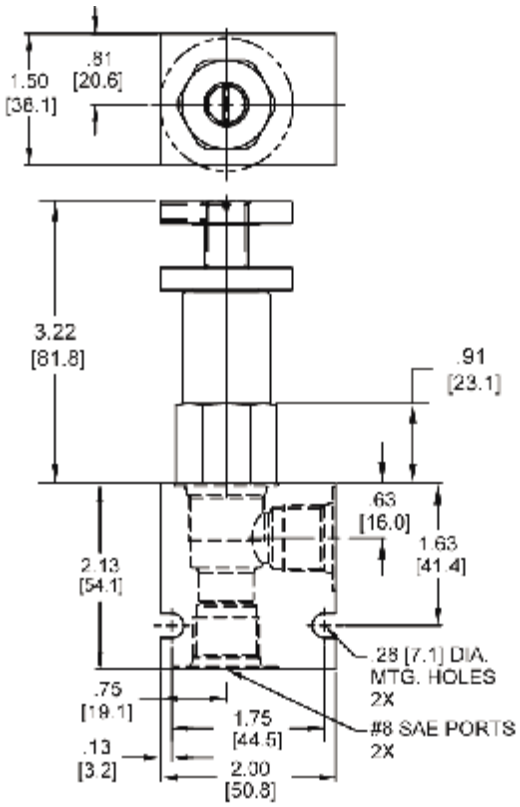


*Body Weight: .47 lbs (.21 kg)*

## ORDERING INFORMATION

**DE-RVP – _____ – _____ – _____**

**OPTIONS**

| | |
|---|---|
| Buna Standard | **00** |
| Viton Standard | **V0** |
| Buna, Knob | **0K** |
| Viton, Knob | **VK** |

**PRESSURE RANGE/SETTING**

| | |
|---|---|
| **4000** | 100 - 4000 PSI |

**BODIES**

| | |
|---|---|
| **Blank** | Without Body |
| **N** | 3/8" NPTF Ports |
| **S** | #8 SAE Ports |

**WARNING:** *the specifications/application data shown in our catalogs and data sheets are intended only as a general guide for the product described (herein). Any specific application should not be undertaken without independent study, evaluation, and testing for suitability.*



Via Malavolti, 36 - 41122 Modena - ITALY - Phone +39 (059) 254895 - Fax +39 (059) 253512 - mail: tecnord@tecnord.com - **www.tecnord.com**

## HT-RVP PILOT OPERATED RELIEF VALVE

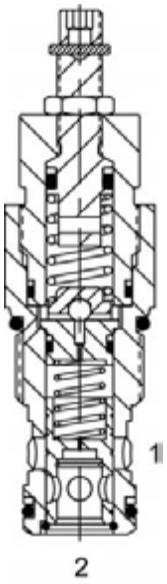


### DESCRIPTION

12 size, 1 1/16-12 thread, “Tecnord” series, pilot operated relief valve.

### OPERATION

The HT-RVP blocks flow from (2) to (1) until sufficient pressure is present at (2) to force the pilot stage off its seat, allowing the main stage spool to shift, opening (2) to (1). The cartridge offers smooth transition in response to load changes in common hydraulic circuits.

### FEATURES

- Hardened parts for long life.
- Industry common cavity.

*Undercut cavity recommended for circuits above 2500 PSI where flows go to 30 GPM.*

### HYDRAULIC SYMBOL

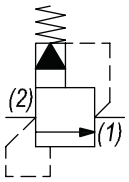


### PERFORMANCE

Actual Test Data (Cartridge Only)

### VALVE SPECIFICATIONS

| | |
|---|---|
| Nominal Flow | 20 GPM (76 LPM) |
| Rated Operating Pressure | 5000 PSI (345 bar) |
| Viscosity Range | 36 to 3000 SSU (3 to 647 cSt) |
| Filtration | ISO 18/16/13 |
| Media Operating Temp. Range | -40° to 250°F (-40° to 120°C) |
| Weight | 1.13 lbs (.51 kg) |
| Operating Fluid Media | General Purpose Hydraulic Fluid |
| Cartridge Torque Requirements | 70 ft-lbs (95 Nm) |
| Cavity | TECNORD 2W |
| Cavity Form Tool (Finishing) | 40500032 |
| Seal Kit | 21191300 |

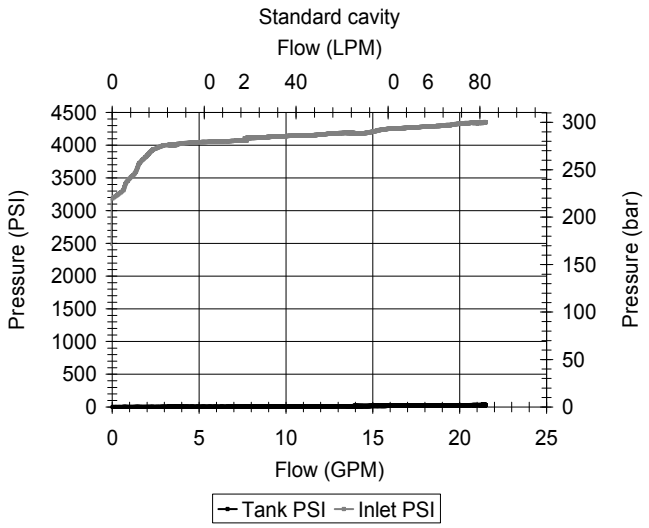


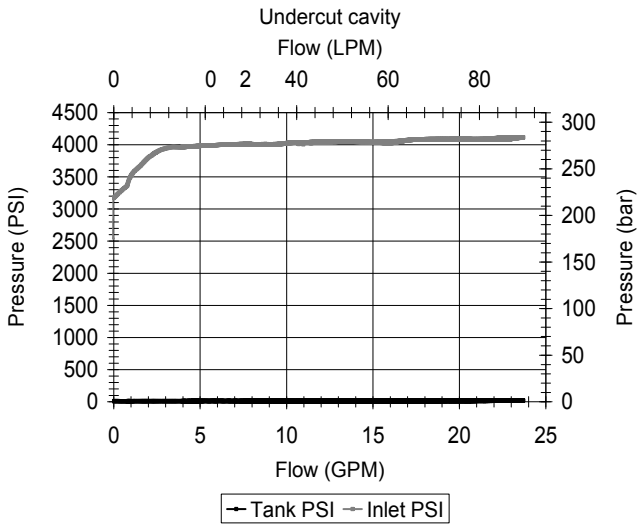


**WARNING:** *the specifications/application data shown in our catalogs and data sheets are intended only as a general guide for the product described (herein). Any specific application should not be undertaken without independent study, evaluation, and testing for suitability.*

## DIMENSIONS

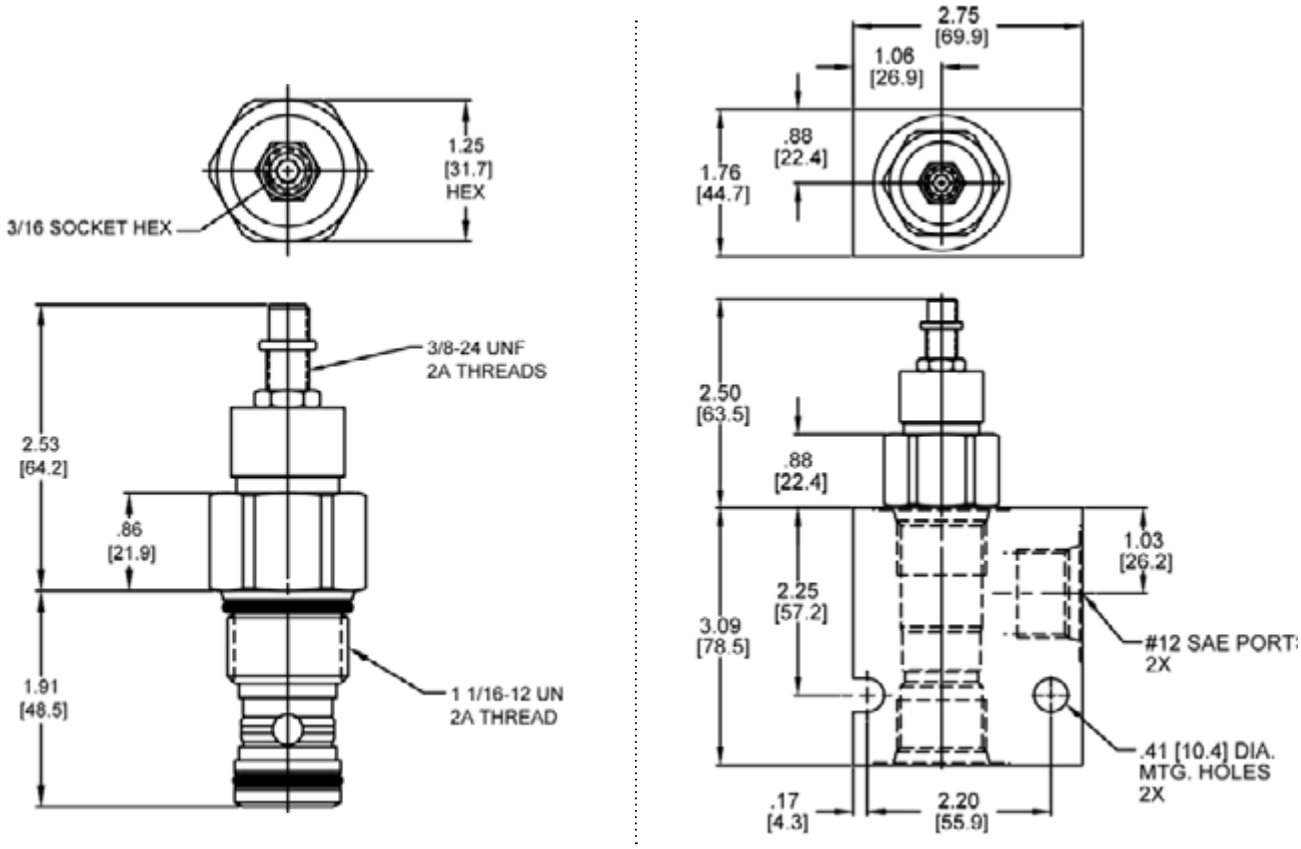


*Body Weight: 3.71 lbs (1.68 kg)*

## ORDERING INFORMATION

**HT-RVP – _____ – _____ – _____**

**OPTIONS**

| | |
|---|---|
| Buna Standard | **00** |
| Viton Standard | **V0** |
| Buna, Knob | **0K** |
| Viton, Knob | **VK** |

**PRESSURE SETTING**

| | |
|---|---|
| **5000** | 100 - 5000 PSI |

**BODIES**

| | |
|---|---|
| **Blank** | Without Body |
| **S** | #12 SAE Ports |

**WARNING:** *the specifications/application data shown in our catalogs and data sheets are intended only as a general guide for the product described (herein). Any specific application should not be undertaken without independent study, evaluation, and testing for suitability.*



Via Malavolti, 36 - 41122 Modena - ITALY - Phone +39 (059) 254895 - Fax +39 (059) 253512 - mail: tecnord@tecnord.com - **www.tecnord.com**

## DE-RVR PILOT OPERATED RELIEF VALVE, WITH REVERSE FLOW

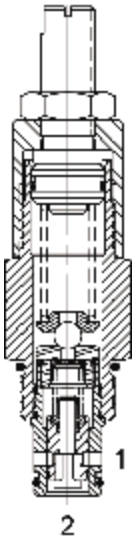


### DESCRIPTION

10 size, 7/8-14 thread, “Delta” series, pilot operated relief valve with reverse flow.

### OPERATION

The DE-RVR blocks flow from (2) to (1) until sufficient pressure is present at (2) to force the pilot stage open, allowing the main stage to shift, opening (2) to (1). The relief flow path is from (2) to (1). Free reverse flow, from (1) to (2), occurs when the pressure at (1) is at least 10 PSI (.7 bar) higher than at port (2).

### FEATURES

- Hardened parts for long life.
- Industry common cavity.

### HYDRAULIC SYMBOL

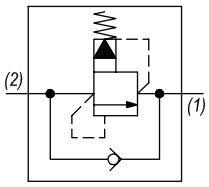


*Consult Chart for flow capacity port (1) to (2).*

### PERFORMANCE

Actual Test Data (Cartridge Only)

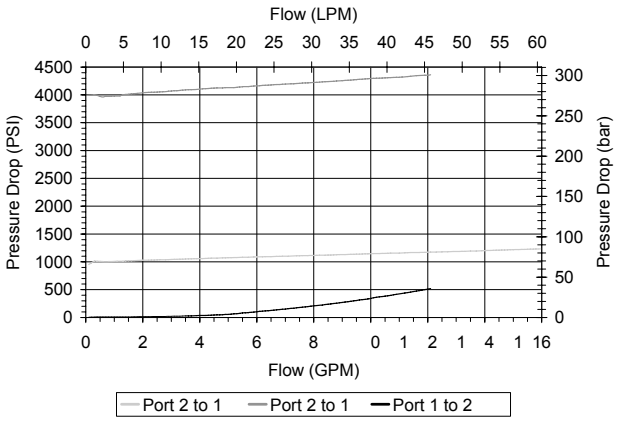


### VALVE SPECIFICATIONS

| | |
|---|---|
| Nominal Flow | 15 GPM (57 LPM) |
| Rated Operating Pressure | 4000 PSI (276 bar) |
| Viscosity Range | 36 to 3000 SSU (3 to 647 cSt) |
| Filtration | ISO 18/16/13 |
| Media Operating Temp. Range | -40° to 250°F (-40° to 120°C) |
| Weight | .56 lbs (.25 kg) |
| Operating Fluid Media | General Purpose Hydraulic Fluid |
| Cartridge Torque Requirements | 30 ft-lbs (40.6 Nm) |
| Cavity | DELTA 2W |
| Cavity Form Tool (Finishing) | 40500000 |
| Seal Kit | 21191200 |

**WARNING:** *the specifications/application data shown in our catalogs and data sheets are intended only as a general guide for the product described (herein). Any specific application should not be undertaken without independent study, evaluation, and testing for suitability.*



Via Malavolti, 36 - 41122 Modena - ITALY - Phone +39 (059) 254895 - Fax +39 (059) 253512 - mail: tecnord@tecnord.com - **www.tecnord.com**

## DIMENSIONS

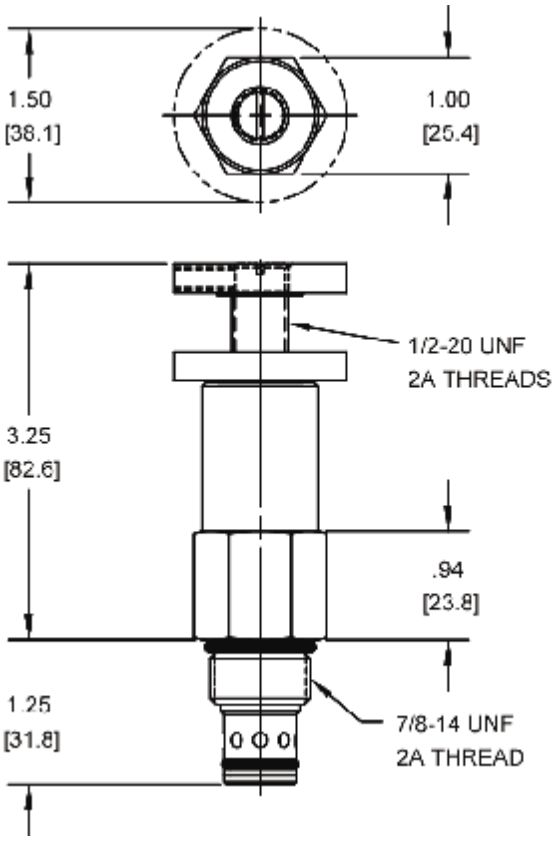


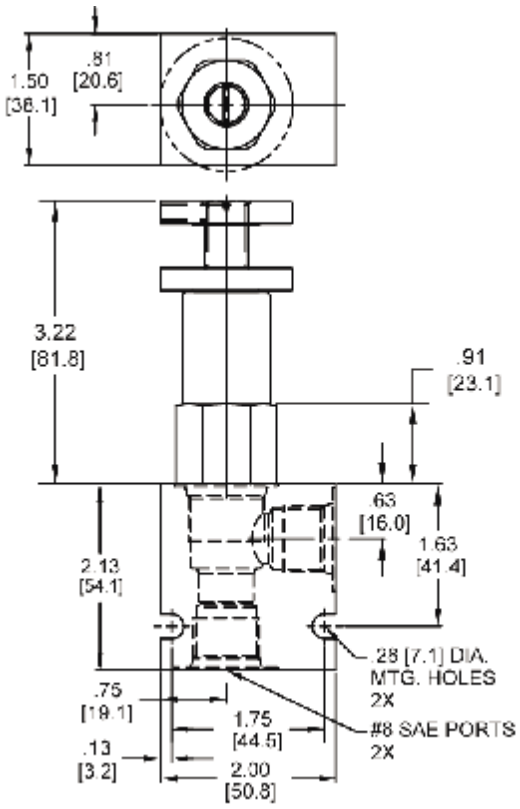


*Body Weight: .47 lbs (.21 kg)*

## ORDERING INFORMATION

**DE-RVR – ____ – ____ – ____**

**OPTIONS**

| | |
|---|---|
| Buna Standard | **00** |
| Viton Standard | **V0** |
| Buna, Knob | **0K** |
| Viton, Knob | **VK** |

**PRESSURE RANGE/SETTING**

| | |
|---|---|
| **4000** | 100 - 4000 PSI |

**BODIES**

| | |
|---|---|
| **Blank** | Without Body |
| **N** | 3/8" NPTF Ports |
| **S** | #8 SAE Ports |

**WARNING:** *the specifications/application data shown in our catalogs and data sheets are intended only as a general guide for the product described (herein). Any specific application should not be undertaken without independent study, evaluation, and testing for suitability.*



Via Malavolti, 36 - 41122 Modena - ITALY - Phone +39 (059) 254895 - Fax +39 (059) 253512 - mail: tecnord@tecnord.com - **www.tecnord.com**

## SJ-RVR PILOT OPERATED RELIEF VALVE, WITH REVERSE FLOW

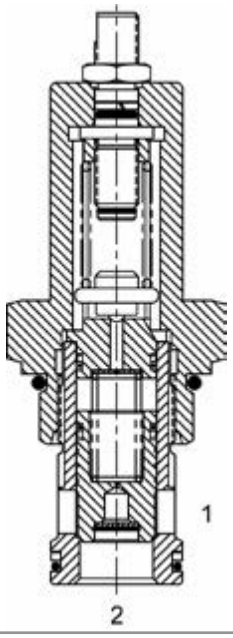


### DESCRIPTION

16 size, 1 5/16-12 thread, “Super” series, pilot operated relief valve with reverse flow.

### OPERATION

The SJ-RVR blocks flow from (2) to (1) until sufficient pressure is present at (2) to force the pilot stage off its seat, allowing the main stage spool to shift, opening (2) to (1). The relief flow path is from (2) to (1). Reverse flow, from (1) to (2), occurs when the pressure at (1) is at least 30 PSI (2.1 bar) higher then at port (2). The Cartridge offers smooth transition in response to load changes in common hydraulic circuits.

### FEATURES

- Hardened parts for long life.
- Industry common cavity.

### HYDRAULIC SYMBOL

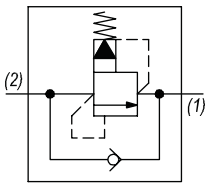


### PERFORMANCE

Actual Test Data (Cartridge Only)

### VALVE SPECIFICATIONS

| | |
|---|---|
| Nominal Flow | 40 GPM (151 LPM) |
| Rated Operating Pressure | 3500 PSI (241 bar) |
| Viscosity Range | 36 to 3000 SSU (3 to 647 cSt) |
| Filtration | ISO 18/16/13 |
| Media Operating Temp. Range | -40° to 250°F (-40° to 120°C) |
| Weight | 1.13 lbs (.51 kg) |
| Operating Fluid Media | General Purpose Hydraulic Fluid |
| Cartridge Torque Requirements | 90 ft-lbs (122 Nm) |
| Cavity | SUPER 2W |
| Cavity Form Tool (Finishing) | 40500017 |
| Seal Kit | 21191400 |

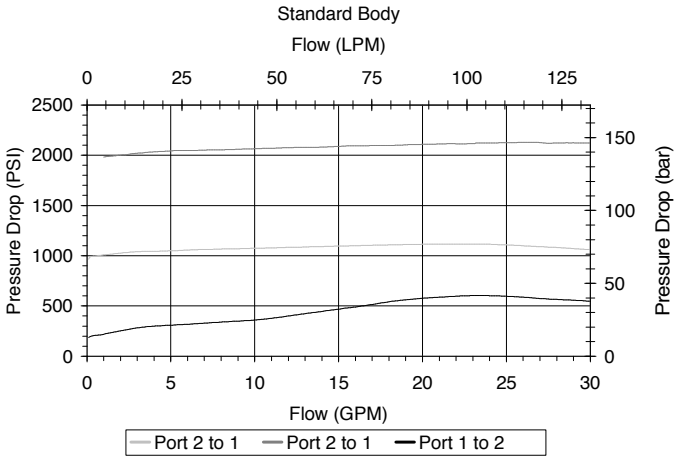


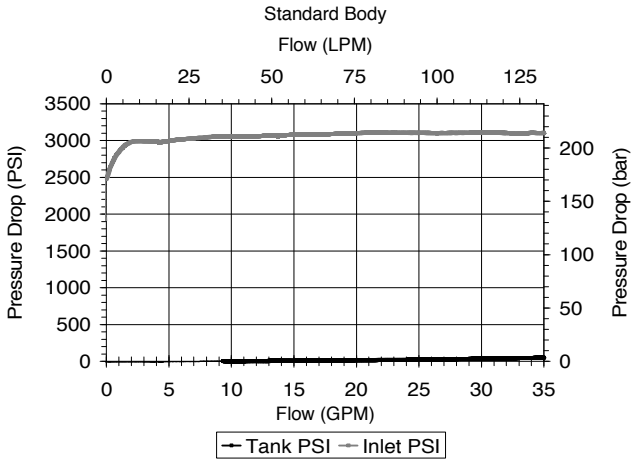


**WARNING:** *the specifications/application data shown in our catalogs and data sheets are intended only as a general guide for the product described (herein). Any specific application should not be undertaken without independent study, evaluation, and testing for suitability.*



Via Malavolti, 36 - 41122 Modena - ITALY - Phone +39 (059) 254895 - Fax +39 (059) 253512 - mail: tecnord@tecnord.com - **www.tecnord.com**

## DIMENSIONS

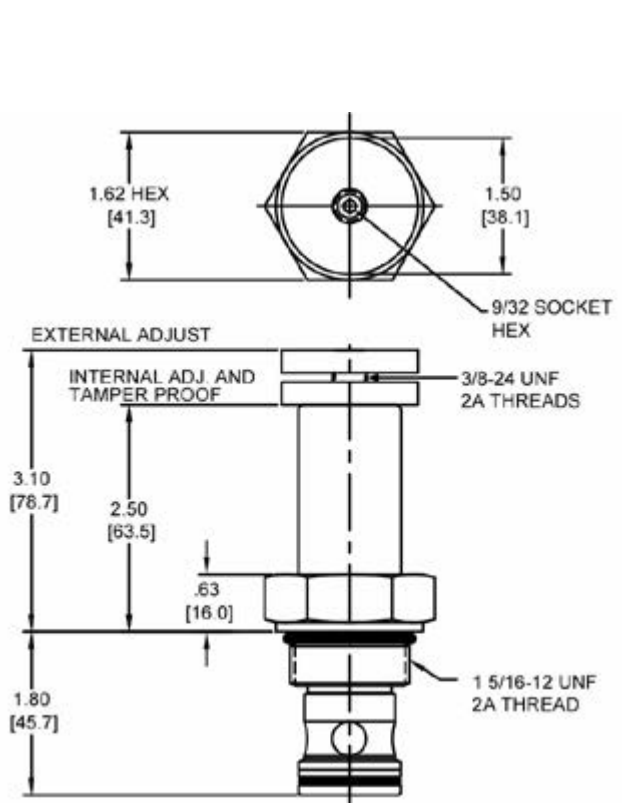


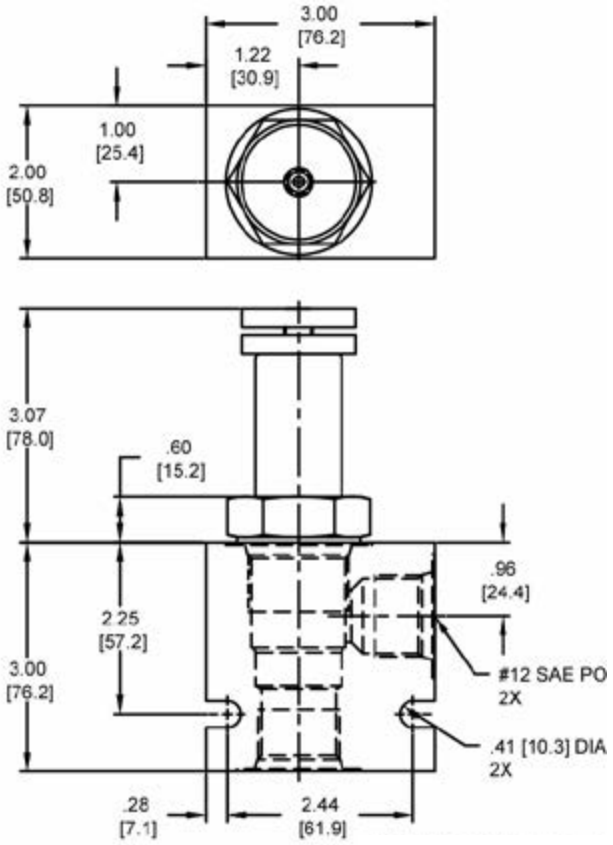


*Body Weight: 1.29 lbs (.59 kg)*

## ORDERING INFORMATION

**SJ-RVR** – _____ – _____ – _____

**OPTIONS**

| | |
|---|---|
| Buna Standard | **00** |
| Viton Standard | **V0** |
| Buna, Knob | **0K** |
| Viton, Knob | **VK** |
| Buna, Internal Adjust | **0I** |
| Viton, Internal Adjust | **VI** |
| Buna, Tamper Proof | **0T** |
| Viton, Tamper Proof | **VT** |

**PRESSURE SETTING**

| | |
|---|---|
| **3500** | 500 - 3500 PSI |

**Tamper Proof**
Fill in 4 Digit Pressure Setting
Example: 0500 - 500 PSI

**BODIES**

| | |
|---|---|
| **Blank** | Without Body |
| **N** | 3/4" NPTF Ports |
| **S** | #12 SAE Ports |

**WARNING:** *the specifications/application data shown in our catalogs and data sheets are intended only as a general guide for the product described (herein). Any specific application should not be undertaken without independent study, evaluation, and testing for suitability.*



Via Malavolti, 36 - 41122 Modena - ITALY - Phone +39 (059) 254895 - Fax +39 (059) 253512 - mail: tecnord@tecnord.com - **www.tecnord.com**

## DE-RWP PILOT OPERATED RELIEF VALVE

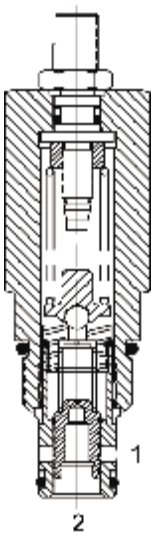


### DESCRIPTION

10 size, 7/8-14 thread, “Delta” series, pilot operated relief valve.

### OPERATION

The DE-RWP blocks flow from (2) to (1) until sufficient pressure is present at (2) to force the pilot stage open, allowing the main stage to shift, opening (2) to (1).

### FEATURES

- Hardened parts for long life.
- Industry common cavity.

### HYDRAULIC SYMBOL

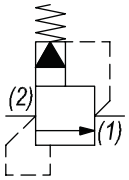


### PERFORMANCE

Actual Test Data (Cartridge Only)

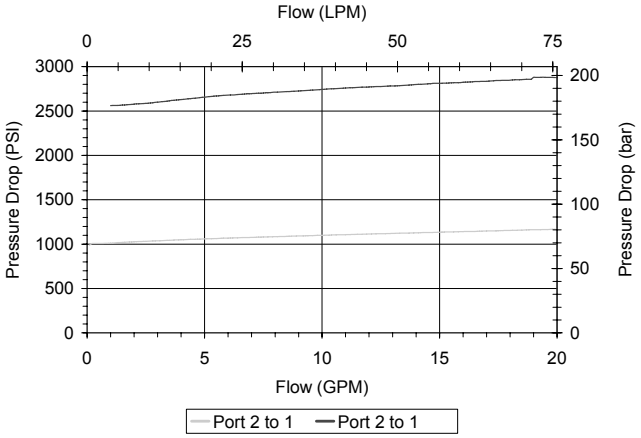


### VALVE SPECIFICATIONS

| | |
|---|---|
| Nominal Flow | 15 GPM (57 LPM) |
| Rated Operating Pressure | 4000 PSI (276 bar) |
| Viscosity Range | 36 to 3000 SSU (3 to 647 cSt) |
| Filtration | ISO 18/16/13 |
| Media Operating Temp. Range | -40° to 250°F (-40° to 120°C) |
| Weight | .53 lbs (.24 kg) |
| Operating Fluid Media | General Purpose Hydraulic Fluid |
| Cartridge Torque Requirements | 30 ft-lbs (40.6 Nm) |
| Cavity | DELTA 2W |
| Cavity Form Tool (Finishing) | 40500000 |
| Seal Kit | 21191200 |

**WARNING:** *the specifications/application data shown in our catalogs and data sheets are intended only as a general guide for the product described (herein). Any specific application should not be undertaken without independent study, evaluation, and testing for suitability.*



Via Malavolti, 36 - 41122 Modena - ITALY - Phone +39 (059) 254895 - Fax +39 (059) 253512 - mail: tecnord@tecnord.com - **www.tecnord.com**

## DIMENSIONS

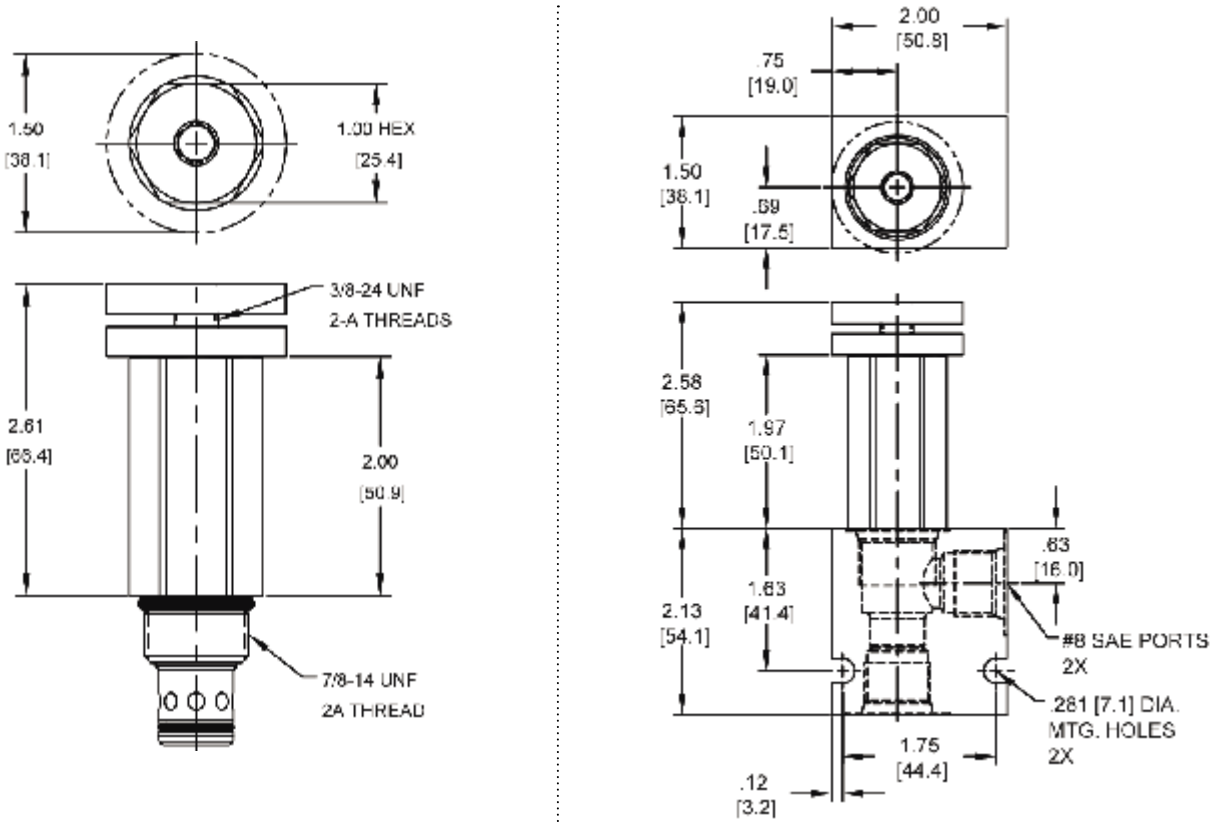


*Body Weight: .47 lbs (.21 kg)*

## ORDERING INFORMATION

**DE-RWP – ____ – ____ – ____**

**OPTIONS**

| | |
|---|---|
| Buna Standard | **00** |
| Viton Standard | **V0** |
| Buna, Knob | **0K** |
| Viton, Knob | **VK** |
| Buna, Internal Adjust | **0I** |
| Viton, Internal Adjust | **VI** |
| Buna, Tamper Proof | **0T** |
| Viton, Tamper Proof | **VT** |

**PRESSURE RANGE/SETTING**

| | |
|---|---|
| **4000** | 1000 - 4000 PSI |

**Tamper Proof**
Fill in 4 Digit Pressure Setting
Example: 0500 - 500 PSI

**BODIES**

| | |
|---|---|
| **Blank** | Without Body |
| **N** | 3/8" NPTF Ports |
| **S** | #8 SAE Ports |

**WARNING:** *the specifications/application data shown in our catalogs and data sheets are intended only as a general guide for the product described (herein). Any specific application should not be undertaken without independent study, evaluation, and testing for suitability.*



Via Malavolti, 36 - 41122 Modena - ITALY - Phone +39 (059) 254895 - Fax +39 (059) 253512 - mail: tecnord@tecnord.com - **www.tecnord.com**

## HE-RWP RAPID RESPONSE, PILOT OPERATED RELIEF VALVE

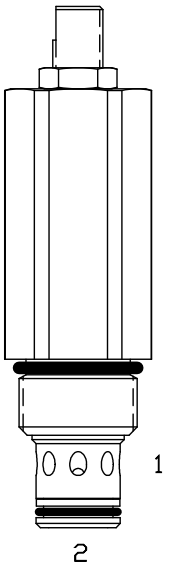


### DESCRIPTION

High Pressure, High Flow, Rapid Response, 10 size, 7/8-14 thread, “Delta” series, pilot operated relief valve.

### OPERATION

The HE-RWP blocks flow from (2) to (1) until sufficient pressure is present at (2) to force the pilot stage open, allowing the main stage to shift, opening (2) to (1).

### FEATURES

- High pressure valve.
- Hardened parts for long life.
- Industry common cavity.
- Rapid response to sudden pressure application.
- Excellent regulation of pressure with flow (low override).

### HYDRAULIC SYMBOL

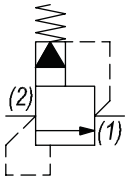


*This is a rapid response, high pressure relief valve with excellent high flow regulation. Consult factory for higher flow capacity cavity option.*

### PERFORMANCE

Actual Test Data (Cartridge Only)

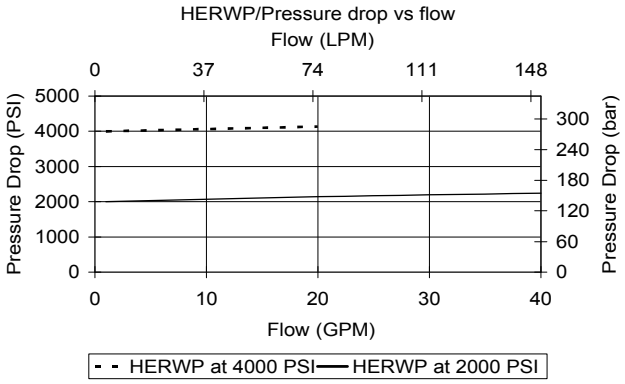


### VALVE SPECIFICATIONS

| | |
|---|---|
| Nominal Flow | 40 GPM (151 LPM) |
| Rated Operating Pressure | 5000 PSI (345 bar) |
| Viscosity Range | 36 to 3000 SSU (3 to 647 cSt) |
| Filtration | ISO 18/16/13 |
| Media Operating Temp. Range | -40° to 250°F (-40° to 120°C) |
| Weight | .53 lbs (.24 kg) |
| Operating Fluid Media | General Purpose Hydraulic Fluid |
| Cartridge Torque Requirements | 30 ft-lbs (40.6 Nm) |
| Cavity | DELTA 2W |
| Cavity Form Tool (Finishing) | 40500000 |
| Seal Kit | 21191200 |

**WARNING:** *the specifications/application data shown in our catalogs and data sheets are intended only as a general guide for the product described (herein). Any specific application should not be undertaken without independent study, evaluation, and testing for suitability.*



Via Malavolti, 36 - 41122 Modena - ITALY - Phone +39 (059) 254895 - Fax +39 (059) 253512 - mail: tecnord@tecnord.com - **www.tecnord.com**

## DIMENSIONS

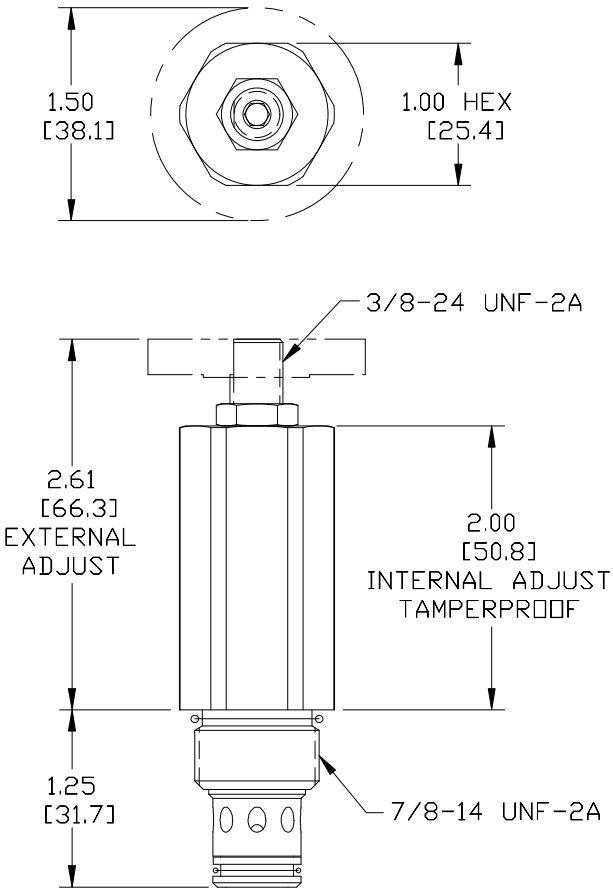


## ORDERING INFORMATION

**HE-RWP – ____ – ____ – ____**

**OPTIONS**

| | |
|---|---|
| Buna Standard | **00** |
| Viton Standard | **V0** |
| Buna, Knob | **0K** |
| Viton, Knob | **VK** |
| Buna, Internal Adjust | **0I** |
| Viton, Internal Adjust | **VI** |
| Buna, Tamper Proof | **0T** |
| Viton, Tamper Proof | **VT** |

**PRESSURE RANGE/SETTING**

| | |
|---|---|
| **5000** | 1000 - 5000 PSI |

**Tamper Proof**
Fill in 4 Digit Pressure Setting
Example: 1500 - 1500 PSI

**BODIES**
**Consult Factory**

**WARNING**
DO NOT USE ALUMINUM BODY
HIGH PRESSURE (5000 PSI) PRODUCT

**WARNING:** *the specifications/application data shown in our catalogs and data sheets are intended only as a general guide for the product described (herein). Any specific application should not be undertaken without independent study, evaluation, and testing for suitability.*



Via Malavolti, 36 - 41122 Modena - ITALY - Phone +39 (059) 254895 - Fax +39 (059) 253512 - mail: tecnord@tecnord.com - **www.tecnord.com**

## DE-RWR PILOT OPERATED RELIEF VALVE, WITH REVERSE FLOW

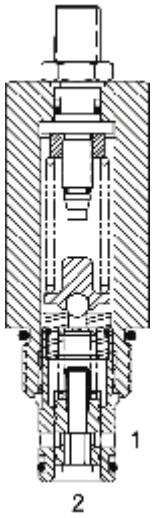


### DESCRIPTION

10 size, 7/8-14 thread, “Delta” series, pilot operated relief valve with reverse flow.

### OPERATION

The DE-RWR blocks flow from (2) to (1) until sufficient pressure is present at (2) to force the pilot stage open, and allow metered flow from (2) to (1). The relief flow path is from (2) to (1). Free reverse flow, from (1) to (2), occurs when the pressure at (1) is at least 10 PSI (.7 bar) higher than at port (2).

### FEATURES

- Hardened parts for long life.
- Industry common cavity.

### HYDRAULIC SYMBOL

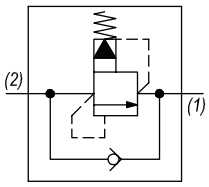


*Consult chart for flow capacity (1) to (2).*

### PERFORMANCE

Actual Test Data (Cartridge Only)

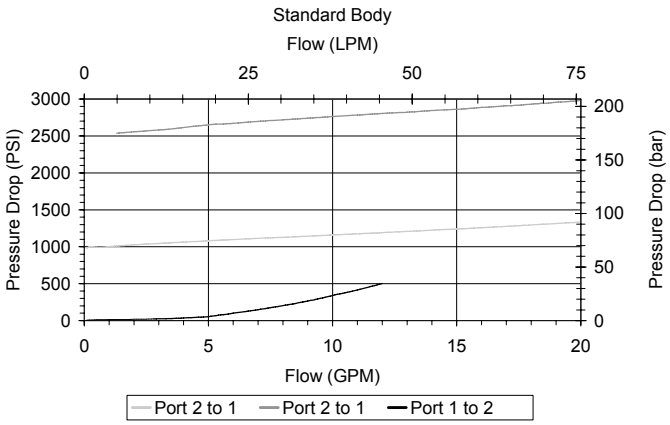


### VALVE SPECIFICATIONS

| | |
|---|---|
| Nominal Flow | 15 GPM (57 LPM) |
| Rated Operating Pressure | 4000 PSI (276 bar) |
| Viscosity Range | 36 to 3000 SSU (3 to 647 cSt) |
| Filtration | ISO 18/16/13 |
| Media Operating Temp. Range | -40° to 250°F (-40° to 120°C) |
| Weight | .53 lbs (.24 kg) |
| Operating Fluid Media | General Purpose Hydraulic Fluid |
| Cartridge Torque Requirements | 30 ft-lbs (40.6 Nm) |
| Cavity | DELTA 2W |
| Cavity Form Tool (Finishing) | 40500000 |
| Seal Kit | 21191200 |

**WARNING:** *the specifications/application data shown in our catalogs and data sheets are intended only as a general guide for the product described (herein). Any specific application should not be undertaken without independent study, evaluation, and testing for suitability.*



Via Malavolti, 36 - 41122 Modena - ITALY - Phone +39 (059) 254895 - Fax +39 (059) 253512 - mail: tecnord@tecnord.com - **www.tecnord.com**

## DIMENSIONS

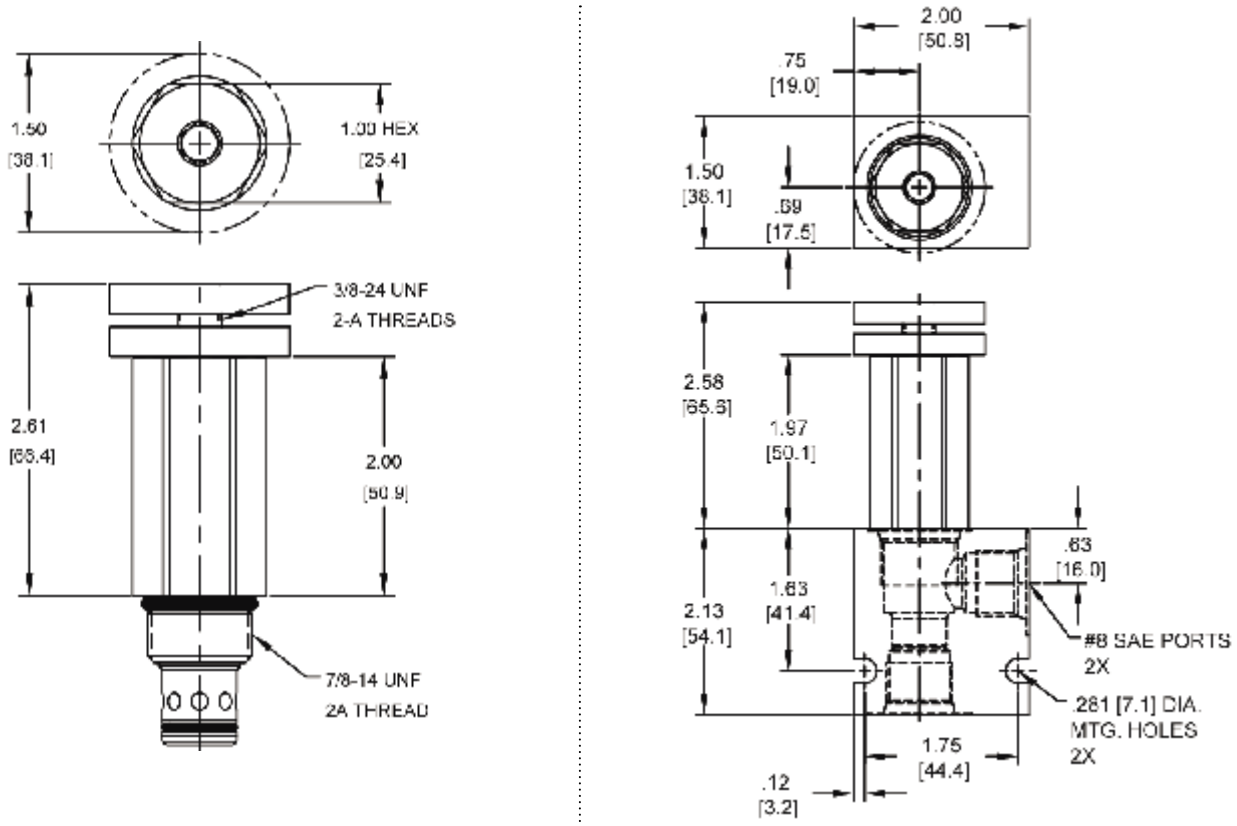


*Body Weight: .47 lbs (.21 kg)*

## ORDERING INFORMATION

**DE-RWR – ____ – ____ – ____**

**OPTIONS**

| | |
|---|---|
| Buna Standard | **00** |
| Viton Standard | **V0** |
| Buna, Knob | **0K** |
| Viton, Knob | **VK** |
| Buna, Internal Adjust | **0I** |
| Viton, Internal Adjust | **VI** |
| Buna, Tamper Proof | **0T** |
| Viton, Tamper Proof | **VT** |

**PRESSURE RANGE/SETTING**

| | |
|---|---|
| **4000** | 1000 - 4000 PSI |

**Tamper Proof**
Fill in 4 Digit Pressure Setting
Example: 0500 - 500 PSI

**BODIES**

| | |
|---|---|
| **Blank** | Without Body |
| **N** | 3/8" NPTF Ports |
| **S** | #8 SAE Ports |

**WARNING:** *the specifications/application data shown in our catalogs and data sheets are intended only as a general guide for the product described (herein). Any specific application should not be undertaken without independent study, evaluation, and testing for suitability.*



Via Malavolti, 36 - 41122 Modena - ITALY - Phone +39 (059) 254895 - Fax +39 (059) 253512 - mail: tecnord@tecnord.com - **www.tecnord.com**

**WARNING:** *the specifications/application data shown in our catalogs and data sheets are intended only as a general guide for the product described (herein). Any specific application should not be undertaken without independent study, evaluation, and testing for suitability.*



Via Malavolti, 36 - 41122 Modena - ITALY - Phone +39 (059) 254895 - Fax +39 (059) 253512 - mail: tecnord@tecnord.com - **www.tecnord.com**

## CROSSOVER RELIEF VALVES

| | GPM | PSI | LPM | BAR | CAVITY | MODEL | PAGE |
|---|---|---|---|---|---|---|---|
| 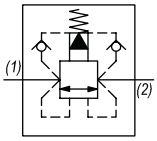  | 15 | 4000 | 57 | 276 | 7/8-14 | **DE-RVB** | MP48 |
| 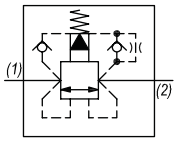  | 15 | 4000 | 57 | 276 | 7/8-14 | **DE-RVC** | MP50 |

## TYPICAL SCHEMATIC

Typical application for the RVC is in a series circuit where a load on motor #2 causes back pressure on motor #1 and relief valve #1. Vent in port (2) of RV 1 allows spring to maintain proper load on motor #1 even though back pressure is present. Port (2) pressure into spring chamber to offset back pressure. Vent at port (2) causes .2 GPM flow from port (2) to port (1).

Typical application for the RVB is in a parallel circuit where the load on motor #2 does not cause back pressure on motor #1. Relief valve maintains differential pressure across motor because one side of motor always goes to tank.

W 50/ 2022

**WARNING:** *the specifications/application data shown in our catalogs and data sheets are intended only as a general guide for the product described (herein). Any specific application should not be undertaken without independent study, evaluation, and testing for suitability.*

## DE-RVB CROSSOVER RELIEF VALVE, FOR PARALLEL CIRCUITS

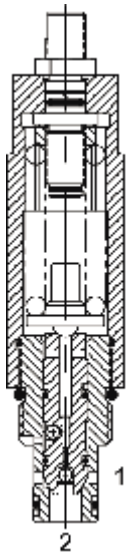


### DESCRIPTION

10 size, 7/8-14 thread, “Delta” series, crossover relief valve for parallel circuit applications.

### OPERATION

The DE-RVB is a direct-acting, cross over relief valve. When pressure at either port exceeds the nominal setting value, flow will be diverted to the opposite port. Back pressure at either port will affect the nominal setting of the opposite port on a 1:1 basis. For correlation purposes, pre-set value will be measured at port (2). Pressure at port (1) will not vary more than ±300 PSI from the port (2) value. The cartridge offers smooth transition in response to load changes in common hydraulic circuits.

### FEATURES

- Hardened parts for long life.
- Industry common cavity.

### HYDRAULIC SYMBOL

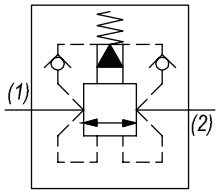


*The DE-RVB is designed for parallel circuit applications. For series circuits, use DE-RVC.*

### PERFORMANCE

Actual Test Data (Cartridge Only)

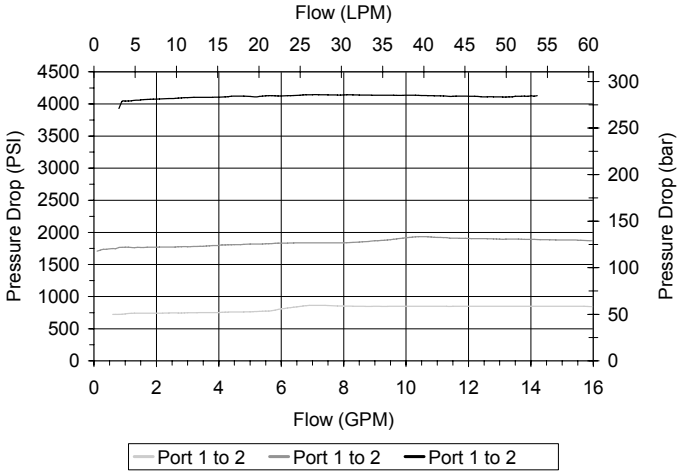


### VALVE SPECIFICATIONS

| | |
|---|---|
| Nominal Flow | 15 GPM (57 LPM) from (2) to (1)<br>20 GPM (76 LPM) from (1) to (2) |
| Rated Operating Pressure | 4000 PSI (276 bar) |
| Viscosity Range | 36 to 3000 SSU (3 to 647 cSt) |
| Filtration | ISO 18/16/13 |
| Media Operating Temp. Range | -40° to 250°F (-40° to 120°C) |
| Weight | .80 lbs (.36 kg) |
| Operating Fluid Media | General Purpose Hydraulic Fluid |
| Cartridge Torque Requirements | 30 ft-lbs (40.6 Nm) |
| Cavity | DELTA 2W |
| Cavity Form Tool (Finishing) | 40500000 |
| Seal Kit | 21191202 |

**WARNING:** *the specifications/application data shown in our catalogs and data sheets are intended only as a general guide for the product described (herein). Any specific application should not be undertaken without independent study, evaluation, and testing for suitability.*



Via Malavolti, 36 - 41122 Modena - ITALY - Phone +39 (059) 254895 - Fax +39 (059) 253512 - mail: tecnord@tecnord.com - **www.tecnord.com**

## DIMENSIONS

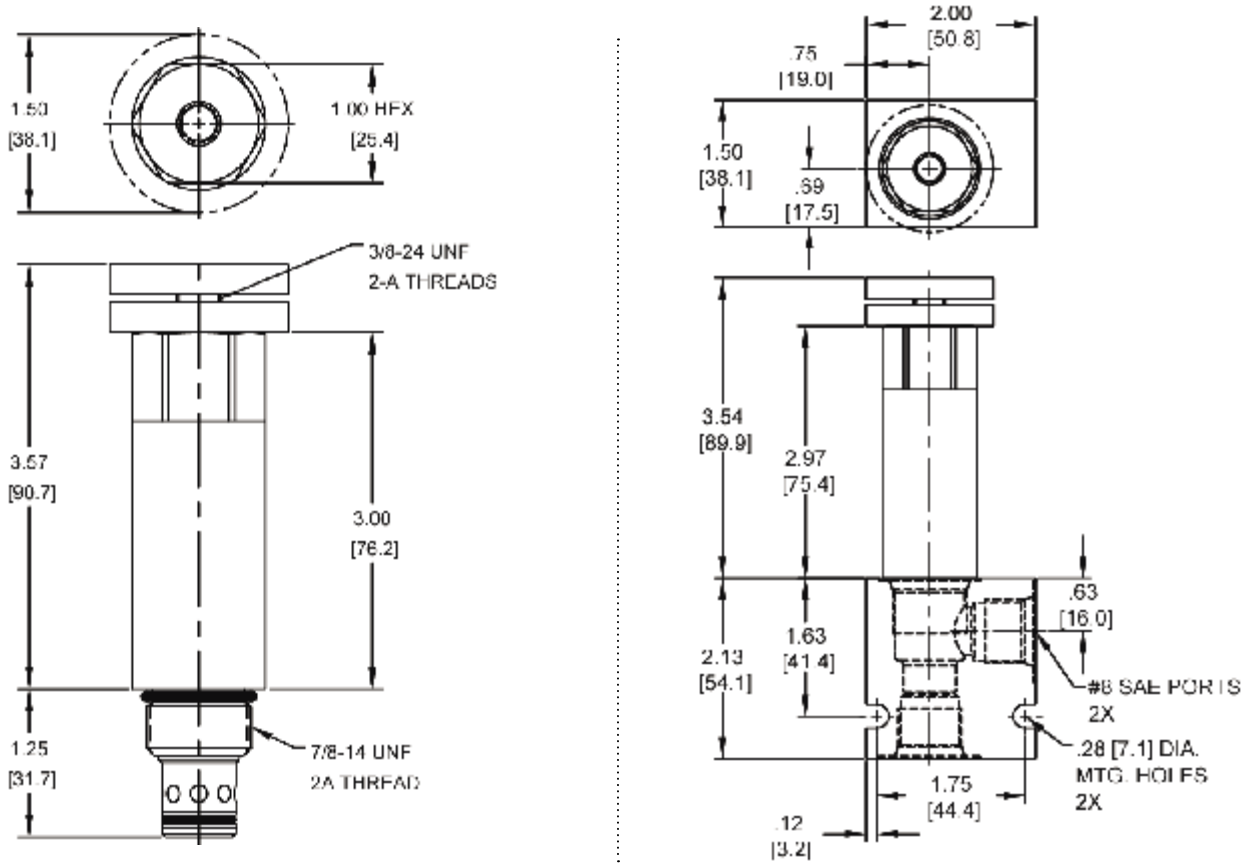


*Body Weight: .47 lbs (.21 kg)*

## ORDERING INFORMATION

**DE-RVB – ____ – ____ – ____**

**OPTIONS**

| | |
|---|---|
| Buna Standard | **00** |
| Viton Standard | **V0** |
| Buna, Knob | **0K** |
| Viton, Knob | **VK** |
| Buna, Internal Adjust | **0I** |
| Viton, Internal Adjust | **VI** |
| Buna, Tamper Proof | **0T** |
| Viton, Tamper Proof | **VT** |

**PRESSURE RANGE/SETTING**

**Ext./Int. Adjustable**

| | |
|---|---|
| **0700** | 100 - 700 PSI |
| **1800** | 500 - 1800 PSI |
| **4000** | 1000 - 4000 PSI |

**Tamper Proof**
Fill in 4 Digit Pressure Setting
Example: 0500 - 500 PSI

**BODIES**

| | |
|---|---|
| **Blank** | Without Body |
| **N** | 3/8" NPTF Ports |
| **S** | #8 SAE Ports |

**WARNING:** *the specifications/application data shown in our catalogs and data sheets are intended only as a general guide for the product described (herein). Any specific application should not be undertaken without independent study, evaluation, and testing for suitability.*



Via Malavolti, 36 - 41122 Modena - ITALY - Phone +39 (059) 254895 - Fax +39 (059) 253512 - mail: tecnord@tecnord.com - **www.tecnord.com**

## DE-RVC CROSSOVER RELIEF VALVE, FOR SERIES CIRCUITS

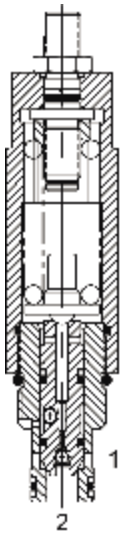


### DESCRIPTION

10 size, 7/8-14 thread, “Delta” series, crossover relief valve for series circuit application.

### OPERATION

The DE-RVC is a direct-acting, cross over relief valve. When pressure at either port exceeds the nominal setting value, flow will be diverted to the opposite port. Back pressure at either port will affect the nominal setting of the opposite port on a 1:1 basis. For correlation purposes, pre-set value will be measured at port (2). Pressure at port (1) will not vary more than ±300 PSI from the port (2) value. The cartridge offers smooth transition in response to load changes in common hydraulic circuits.

### FEATURES

- Hardened parts for long life.
- Industry common cavity.

### HYDRAULIC SYMBOL

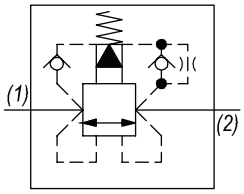


*The DE-RVC is designed for series circuit applications with controlled leakage between ports (2) and (1). For parallel circuits, use DE-RVB.*

### PERFORMANCE

Actual Test Data (Cartridge Only)

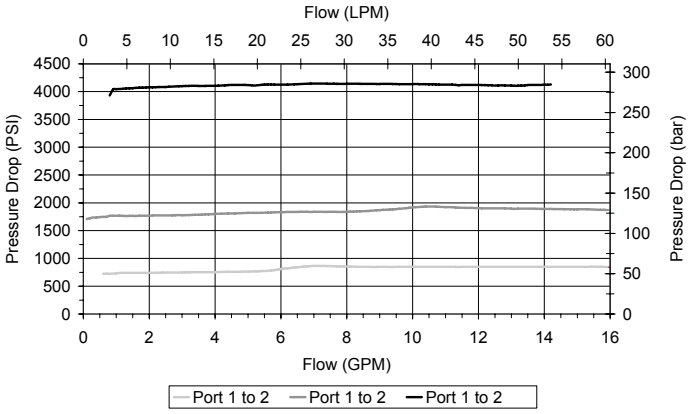


### VALVE SPECIFICATIONS

| | |
|---|---|
| Nominal Flow | 15 GPM (57 LPM) from (2) to (1)<br>20 GPM (76 LPM) from (1) to (2) |
| Rated Operating Pressure | 4000 PSI (276 bar) |
| Viscosity Range | 36 to 3000 SSU (3 to 647 cSt) |
| Filtration | ISO 18/16/13 |
| Media Operating Temp. Range | -40° to 250°F (-40° to 120°C) |
| Weight | .80 lbs (.36 kg) |
| Operating Fluid Media | General Purpose Hydraulic Fluid |
| Cartridge Torque Requirements | 30 ft-lbs (40.6 Nm) |
| Cavity | DELTA 2W |
| Cavity Form Tool (Finishing) | 40500000 |
| Seal Kit | 21191202 |

**WARNING:** *the specifications/application data shown in our catalogs and data sheets are intended only as a general guide for the product described (herein). Any specific application should not be undertaken without independent study, evaluation, and testing for suitability.*



Via Malavolti, 36 - 41122 Modena - ITALY - Phone +39 (059) 254895 - Fax +39 (059) 253512 - mail: tecnord@tecnord.com - **www.tecnord.com**

## DIMENSIONS

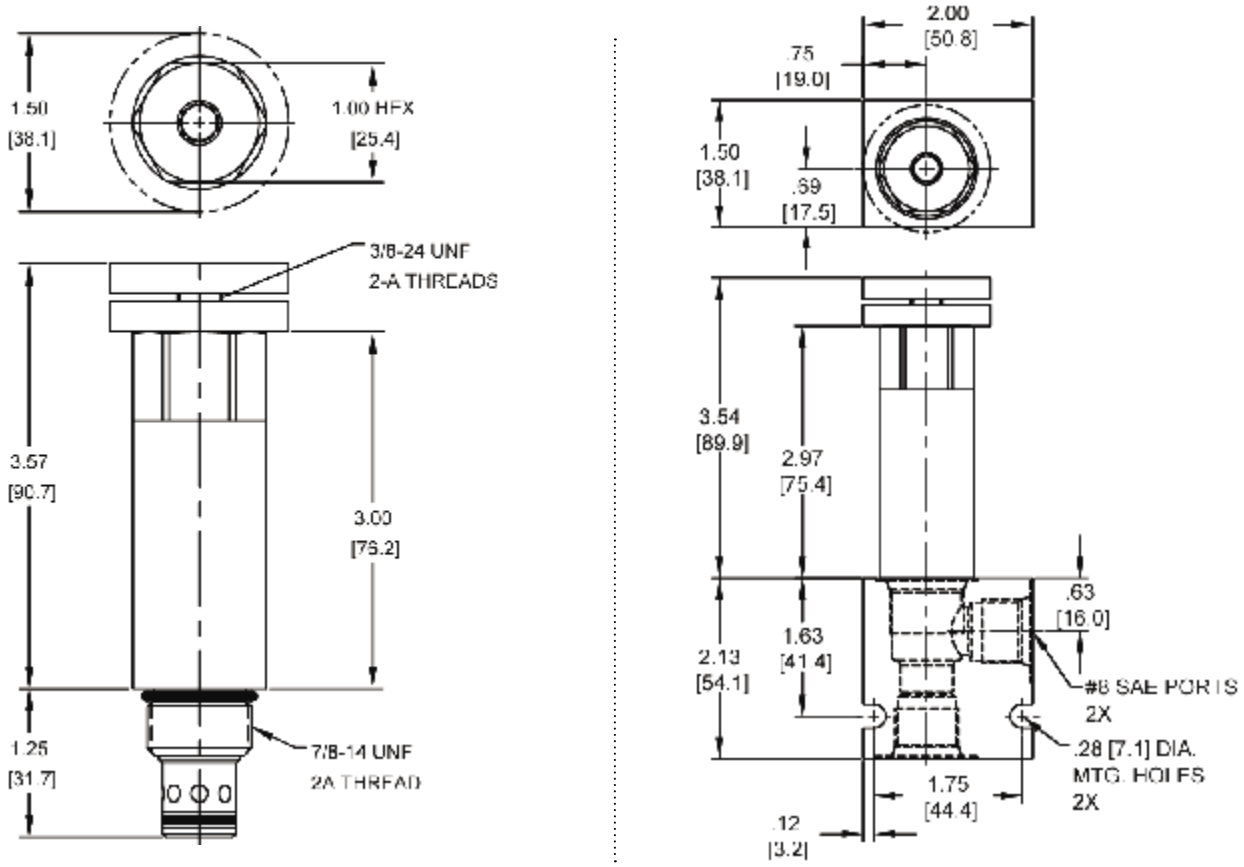


*Body Weight: .47 lbs (.21 kg)*

## ORDERING INFORMATION

**DE-RVC –** _____ **–** _____ **–** _____

**OPTIONS**

| | |
|---|---|
| Buna Standard | **00** |
| Viton Standard | **V0** |
| Buna, Knob | **0K** |
| Viton, Knob | **VK** |
| Buna, Internal Adjust | **0I** |
| Viton, Internal Adjust | **VI** |
| Buna, Tamper Proof | **0T** |
| Viton, Tamper Proof | **VT** |

**BODIES**

| | |
|---|---|
| **Blank** | Without Body |
| **N** | 3/8" NPTF Ports |
| **S** | #8 SAE Ports |

**PRESSURE RANGE/SETTING**

**Ext./Int. Adjustable**

| | |
|---|---|
| **0700** | 100 - 700 PSI |
| **1800** | 500 - 1800 PSI |
| **4000** | 1000 - 4000 PSI |

**Tamper Proof**
Fill in 4 Digit Pressure Setting
Example: 0500 - 500 PSI

**WARNING:** *the specifications/application data shown in our catalogs and data sheets are intended only as a general guide for the product described (herein). Any specific application should not be undertaken without independent study, evaluation, and testing for suitability.*



Via Malavolti, 36 - 41122 Modena - ITALY - Phone +39 (059) 254895 - Fax +39 (059) 253512 - mail: tecnord@tecnord.com - **www.tecnord.com**

**WARNING:** *the specifications/application data shown in our catalogs and data sheets are intended only as a general guide for the product described (herein). Any specific application should not be undertaken without independent study, evaluation, and testing for suitability.*



Via Malavolti, 36 - 41122 Modena - ITALY - Phone +39 (059) 254895 - Fax +39 (059) 253512 - mail: tecnord@tecnord.com - **www.tecnord.com**

## PRESSURE COMPENSATED REGULATOR VALVES

| | GPM | PSI | LPM | BAR | CAVITY | MODEL | PAGE |
|---|---|---|---|---|---|---|---|
| | 10 | 3500 | 38 | 241 | 7/8-14 | **DF-PCR** | MP54 |
| | 33 | 3500 | 120 | 241 | Special | **QC-CP3** | MP56 |
| | 8 | 3500 | 30 | 241 | 3/4-16 | **PP-PCA** | MP58 |
| | 40 | 3500 | 151 | 241 | 1 1/16-12 | **TR-PCA** | MP60 |
| | 40 | 3500 | 151 | 241 | 1 5/16-12 | **SL-PCA** | MP62 |
| 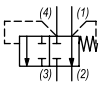 | 10 | 3500 | 38 | 241 | 7/8-14 | **DG-PCB** | MP64 |
| | 10 | 3500 | 38 | 241 | 7/8-14 | **DG-TCB** | MP66 |
| 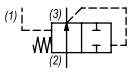 | 8 | 3000 | 30 | 207 | 3/4-16 | **PP-PCC** | MP68 |
| | 8 | 3500 | 30 | 241 | 7/8-14 | **DF-CP2** | MP70 |
| | 19 | 3500 | 70 | 241 | Special | **QC-CP2** | MP72 |
| | 20 | 3500 | 76 | 241 | 1 1/16-12 | **TR-PCC** | MP74 |
| | 10 | 3500 | 38 | 241 | 7/8-14 | **DF-PCE** | MP76 |
| | 40 | 3500 | 151 | 241 | 1 5/16-12 | **SL-PCE** | MP78 |
| 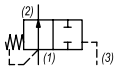 | 10 | 3500 | 38 | 241 | 7/8-14 | **DF-PCS** | MP80 |
| 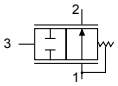 | 10 | 3500 | 38 | 241 | 7/8-14 | **DF-TCS** | MP82 |
| 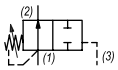 | 10 | 3500 | 38 | 241 | 7/8-14 | **DF-PCT** | MP84 |

## TYPICAL SCHEMATIC

These very flexible pressure compensator valves can regulate flow through many types of orifices: Electro-Proportional Orifices, Plate or Set Screw Orifices, Needle Valves &/or even across the pressure drop of other control valve (s). When using multiple compensating devices in the same circuit it is good practice to keep at least 50 PSID between their settings to reduce the likelihood of cross talking during dynamic events.

**WARNING:** *the specifications/application data shown in our catalogs and data sheets are intended only as a general guide for the product described (herein). Any specific application should not be undertaken without independent study, evaluation, and testing for suitability.*

## DF-PCR PRESSURE COMPENSATING REGULATOR VALVE

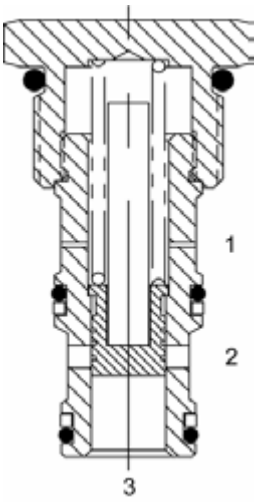


### DESCRIPTION

10 size, 7/8-14 thread, “Delta” series, pressure compensating regulator valve.

### OPERATION

The DF-PCR-0P with an orifice between ports (3) and (1) maintains a constant flow rate from (3) regardless of load pressure changes in the system upstream of (3), or in the bypass leg at (2) as long as pressure at (2) is less than (1). The valve’s spool maintains a constant differential pressure across an external orifice, thereby regulating the hydraulic flow rate from (3) to (2) (see options table for pressure ranges). When used with an orifice as described above, as a priority type regulator, delivering pump flow first to (3), then bypassing excess to (2). All ports may be fully pressurized. The DF-PCR-0V with a dump valve and a pilot relief valve at (1) acts as main stage of a ventable relief valve.

### FEATURES

- Hardened parts for long life.
- Industry common cavity.

### HYDRAULIC SYMBOL

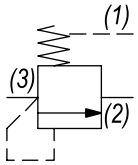


*Can be used as a logic element.DF-PCR-oP is commonly used as a bypass flow regulator (80 PSI recommended). DF-PCR-oV is commonly used as the main stage of a ventable relief valve (40 and 80 PSI recommended).*

### PERFORMANCE

Actual Test Data (Cartridge Only)

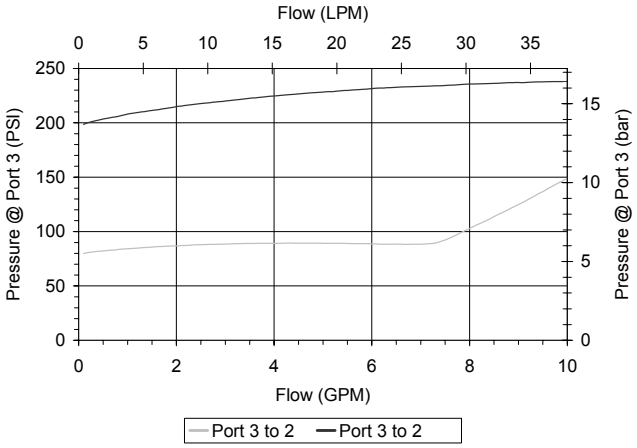


### VALVE SPECIFICATIONS

| | |
|---|---|
| Nominal Flow | 10 GPM (38 LPM) |
| Rated Operating Pressure | 3500 PSI (241 bar) |
| Seat Ratio | Area of Pilot is equal to the area at Port (3) |
| Viscosity Range | 36 to 3000 SSU (3 to 647 cSt) |
| Filtration | ISO 18/16/13 |
| Media Operating Temp. Range | -40° to 250°F (-40° to 120°C) |
| Weight | .19 lbs (.09 kg) |
| Operating Fluid Media | General Purpose Hydraulic Fluid |
| Cartridge Torque Requirements | 30 ft-lbs (40.6 Nm) |
| Cavity | DELTA 3W |
| Cavity Form Tool (Finishing) | 40500001 |
| Seal Kit | 21191206 |

**WARNING:** *the specifications/application data shown in our catalogs and data sheets are intended only as a general guide for the product described (herein). Any specific application should not be undertaken without independent study, evaluation, and testing for suitability.*



Via Malavolti, 36 - 41122 Modena - ITALY - Phone +39 (059) 254895 - Fax +39 (059) 253512 - mail: tecnord@tecnord.com - **www.tecnord.com**

## DIMENSIONS

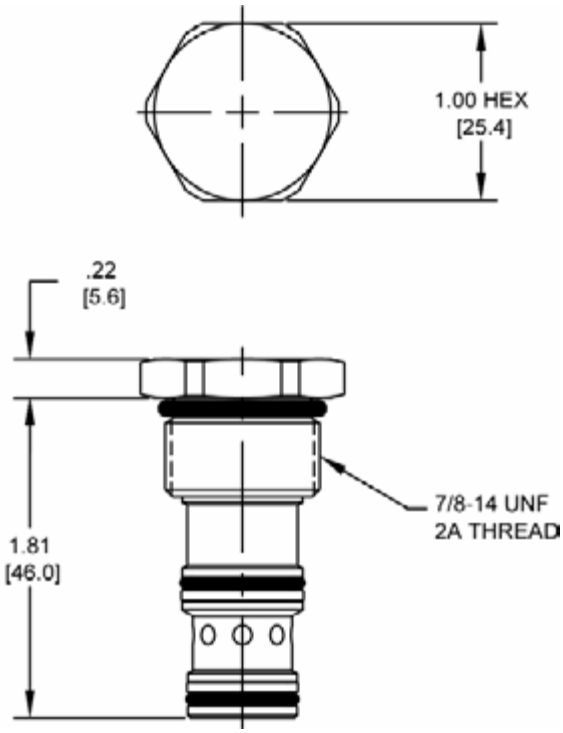


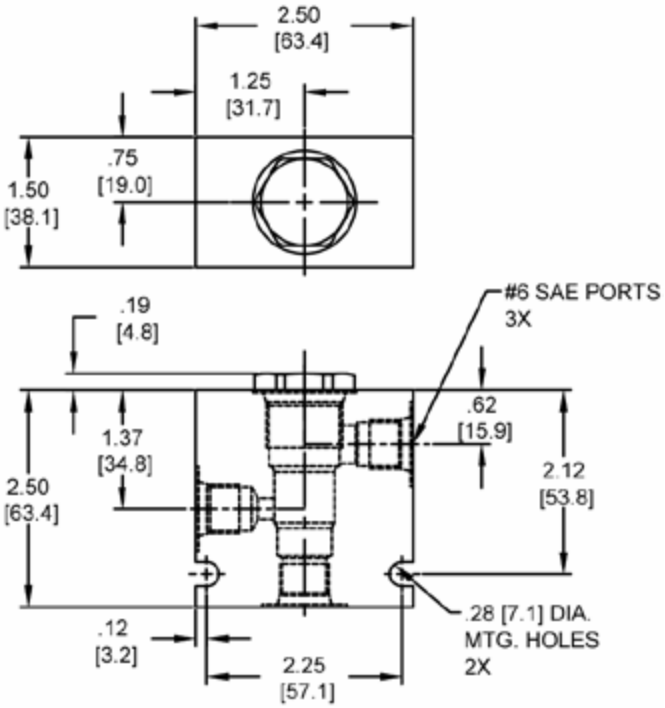


*Body Weight: .76 lbs (.35 kg)*

## ORDERING INFORMATION

**DF-PCR – ____ – ____ – ____**

**OPTIONS**

| | |
|---|---|
| Buna, Pilot to Close | **0P** |
| Viton, Pilot to Close | **VP** |
| Buna, Vent to Open | **0V** |
| Viton, Vent to Open | **VV** |

**PRESSURE SETTING**

| | |
|---|---|
| **0040** | 40 PSI |
| **0080** | 80 PSI |
| **0150** | 150 PSI |
| **0200** | 200 PSI |

**BODIES**

| | |
|---|---|
| **Blank** | Without Body |
| **N** | 1/4" NPTF Ports |
| **S** | #6 SAE Ports |

**WARNING:** *the specifications/application data shown in our catalogs and data sheets are intended only as a general guide for the product described (herein). Any specific application should not be undertaken without independent study, evaluation, and testing for suitability.*

## QC-CP3 PRESSURE COMPENSATING VALVE, BYPASS TYPE FOR 3 WAY FLOW CONTROL

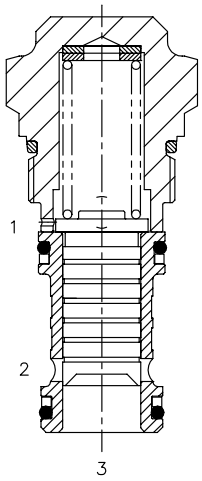


### DESCRIPTION

Special cavity, pressure compensating valve, bypass type, for 3 way flow control, normally closed.

### OPERATION

The QC-CP3 with an orifice between ports (3) and (1) maintains a constant flow rate from (3) regardless of load pressure changes in the system upstream of (3), or in the bypass leg at (2) as long as pressure at (2) is less than (1). The valve's spool maintains a constant differential pressure across an external orifice, thereby regulating the hydraulic flow rate from (3) to (2), (see options table for pressure ranges). When used with an orifice as described above, as a priority type regulator, delivering pump flow first to (3), then bypassing excess to (2). All ports may be fully pressurized.

### FEATURES

- Hardened parts for long life.
- Spring range from 8 to 24 bar.

### HYDRAULIC SYMBOL

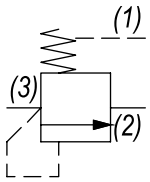


*Pressure compensator for 3 way flow control, typically used with an external orifice between ports (3) and (1). Port (1) should sense upstream pressure of orifice.*

### PERFORMANCE

Actual Test Data (Cartridge Only)

**Pressure (bar) vs. flow (lt/min)**

*For various pressure compensator settings*

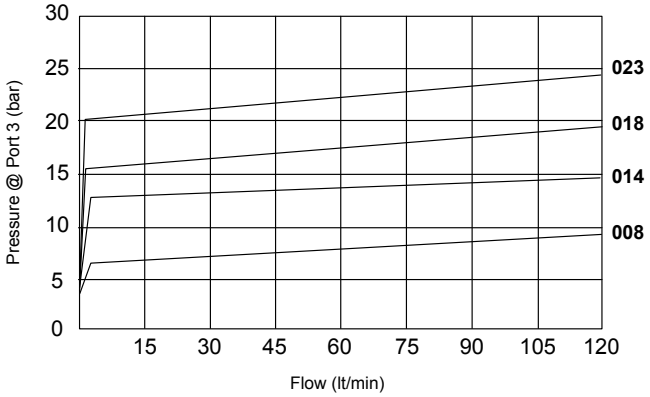


### VALVE SPECIFICATIONS

| | |
|---|---|
| Nominal Flow | 33 GPM (120 LPM) |
| Rated Operating Pressure | 3500 PSI (241 bar) |
| Typical Internal Leakage (150 SSU) | 35 ml/min @ 250 bar |
| Viscosity Range | 36 to 3000 SSU (3 to 647 cSt) |
| Filtration | ISO 18/16/13 |
| Media Operating Temp. Range | -40° to 250°F (-40° to 120°C) |
| Weight | .35 lbs (.16 kg) |
| Operating Fluid Media | General Purpose Hydraulic Fluid |
| Cartridge Torque Requirements | 52 ft-lbs (70 Nm) |
| Cavity | T031 (Special) |
| Cavity Tools Kit (form tool, reamer, tap) | K-T031 |
| Seal Kit | 210902321 |

**WARNING:** *the specifications/application data shown in our catalogs and data sheets are intended only as a general guide for the product described (herein). Any specific application should not be undertaken without independent study, evaluation, and testing for suitability.*



Via Malavolti, 36 - 41122 Modena - ITALY - Phone +39 (059) 254895 - Fax +39 (059) 253512 - mail: tecnord@tecnord.com - **www.tecnord.com**

## DIMENSIONS

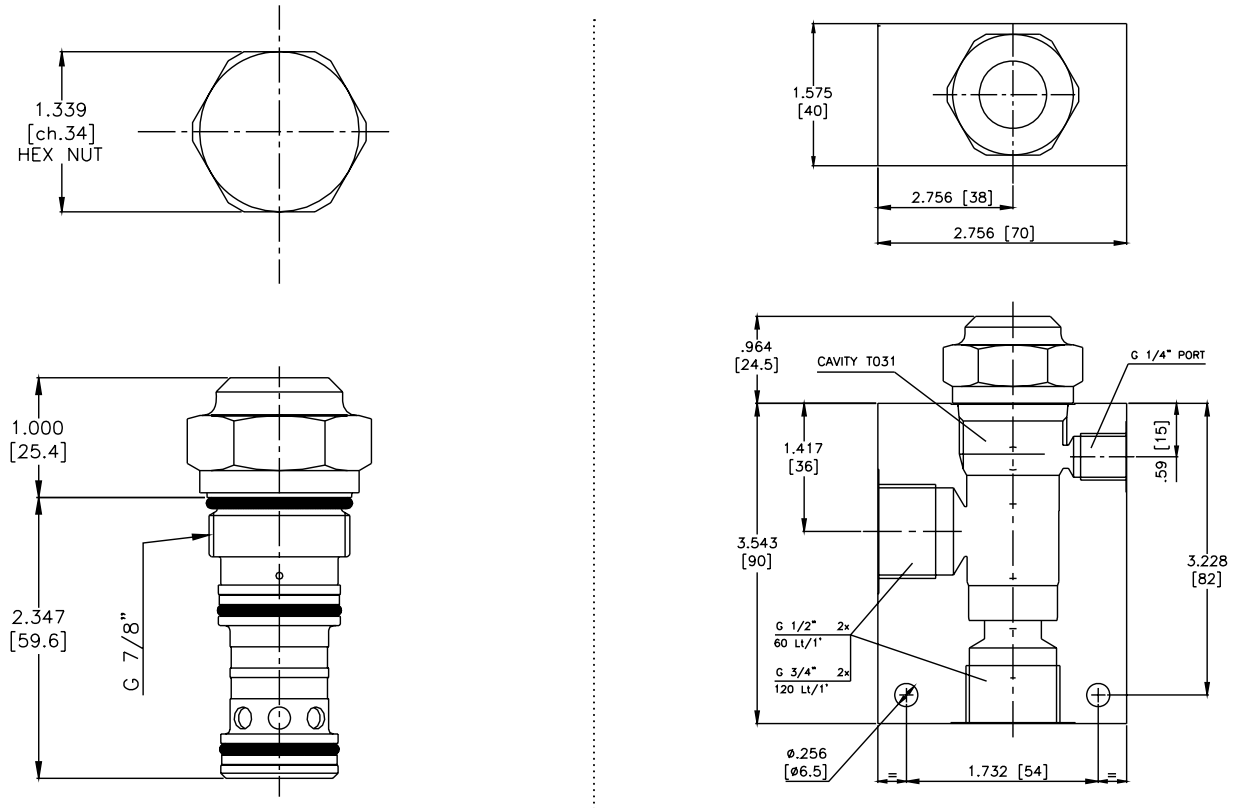


*(for bodies style and sizes see section "Accessories")*

## ORDERING INFORMATION

**QC-CP3 – ____ – ____ – ____**

**OPTIONS**

| | |
|---|---|
| Buna Standard | **00** |
| Viton Standard | **V0** |

**BODIES**

| | |
|---|---|
| **Blank** | Without Body |
| **N** | 1/2" BSP Ports |
| **S** | #8 SAE Ports |

**PRESSURE SETTINGS**

| | |
|---|---|
| **008** | 8 bar (115 PSI) @ 60 l/min |
| **014** | 14 bar (200 PSI) @ 60 l/min |
| **018** | 18 bar (260 PSI) @ 60 l/min |
| **023** | 23 bar (330 PSI) @ 60 l/min |

**WARNING:** *the specifications/application data shown in our catalogs and data sheets are intended only as a general guide for the product described (herein). Any specific application should not be undertaken without independent study, evaluation, and testing for suitability.*



Via Malavolti, 36 - 41122 Modena - ITALY - Phone +39 (059) 254895 - Fax +39 (059) 253512 - mail: tecnord@tecnord.com - **www.tecnord.com**

## PP-PCA FIXED PRESSURE COMPENSATING REGULATOR VALVE

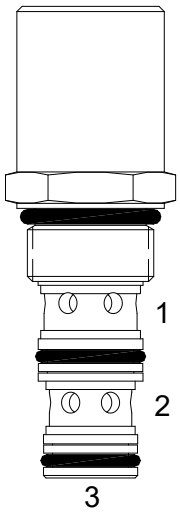


### DESCRIPTION

8 size, 3/4-16 thread, “Power” series, pressure compensating regulator valve.

### OPERATION

The PP-PCA-0P with an orifice between ports (3) and (1) maintains a constant flow rate from (3) regardless of load pressure changes in the system upstream of (3), or in the bypass leg at (2) as long as pressure at (2) is less than (1).

The valves spool maintains a constant differential pressure across an external orifice, thereby regulating the hydraulic flow rate across this external orifice. (see options table for pressure ranges). When used with an orifice as described above, it functions as a priority type regulator, delivering pump flow first to the external orifice, then bypassing excess to (2). All ports may be fully pressurized. The PP-PCA-0V with a dump valve and a pilot relief valve at (1) acts as main stage of a ventable relief valve.

### FEATURES

- Hardened parts for long life.
- Industry common cavity.

### HYDRAULIC SYMBOL

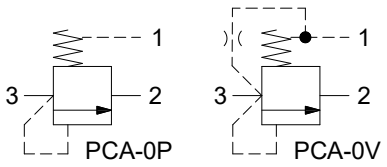


*Can be used as a logic element.*
*PP-PCA-0P is commonly used as a bypass flow regulator (80 PSI recommended).*
*PP-PCA-0V is commonly used as the main stage of a ventable relief valve (40 and 80 PSI recommended).*

### PERFORMANCE

Actual Test Data (Cartridge Only)

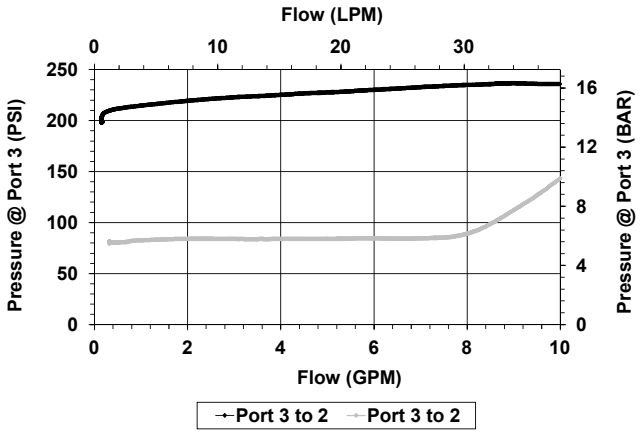


### VALVE SPECIFICATIONS

| | |
|---|---|
| Nominal Flow | 8 GPM (30 LPM) |
| Rated Operating Pressure | 3500 PSI (241 bar) |
| Seat Ratio | Area of Pilot is equal to the area at Port (3) |
| Viscosity Range | 36 to 3000 SSU (3 to 647 cSt) |
| Filtration | ISO 18/16/13 |
| Media Operating Temp. Range | -40° to 250°F (-40° to 120°C) |
| Weight | .19 lbs (.09 kg) |
| Operating Fluid Media | General Purpose Hydraulic Fluid |
| Cartridge Torque Requirements | 25 ft-lbs (34 Nm) |
| Cavity | POWER 3W |
| Cavity Form Tool (Finishing) | 40500024 |
| Seal Kit | 21191106 |

**WARNING:** *the specifications/application data shown in our catalogs and data sheets are intended only as a general guide for the product described (herein). Any specific application should not be undertaken without independent study, evaluation, and testing for suitability.*



Via Malavolti, 36 - 41122 Modena - ITALY - Phone +39 (059) 254895 - Fax +39 (059) 253512 - mail: tecnord@tecnord.com - **www.tecnord.com**

## DIMENSIONS

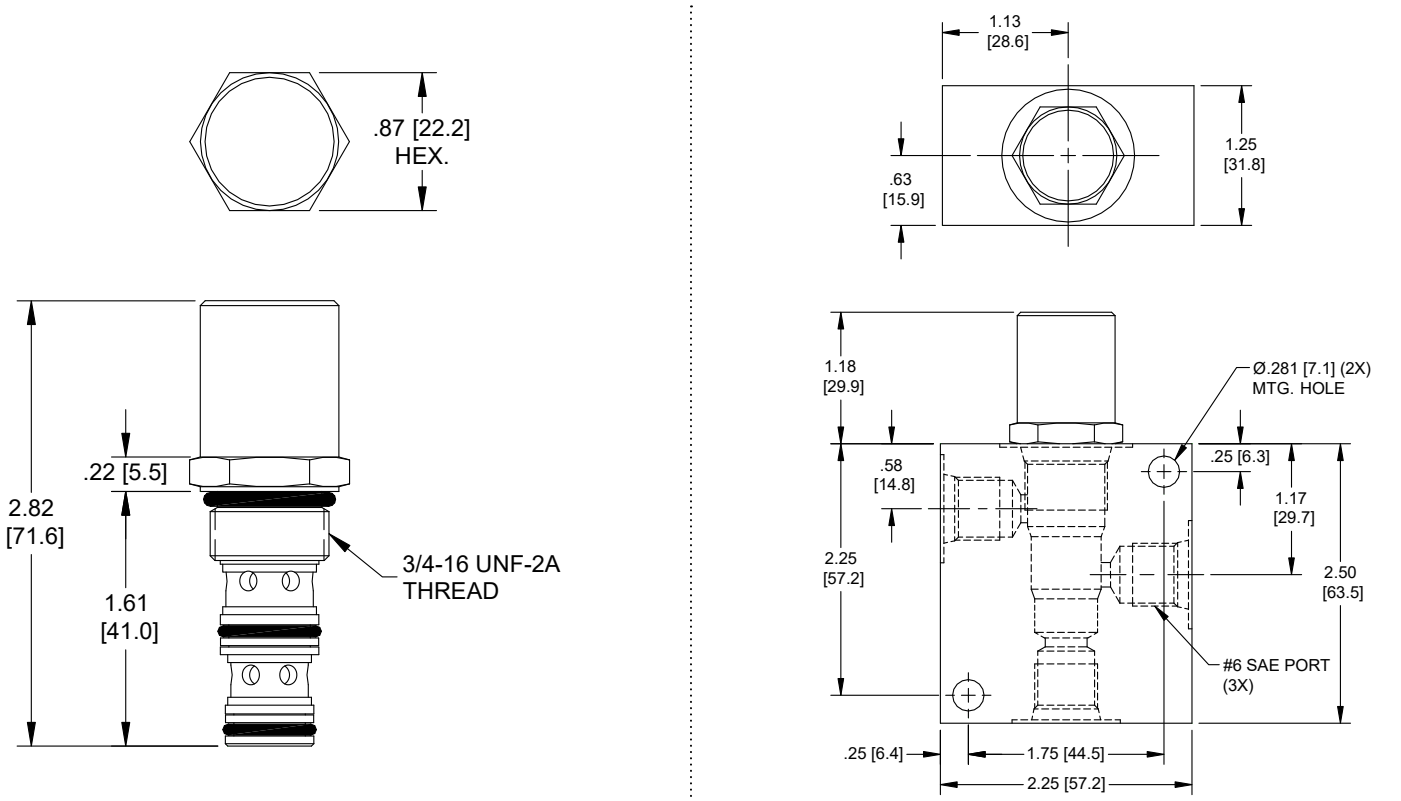


*Body Weight: .56 lbs (.55 kg)*

## ORDERING INFORMATION

**PP-PCA – ____ – ____ – ____**

**OPTIONS**

| | |
|---|---|
| Buna, Vent to Open | **0V** |
| Buna, Pilot to Close | **0P** |
| Viton, Vent to Open | **VV** |
| Viton, Pilot to Close | **VP** |

**PRESSURE SETTING**

| | |
|---|---|
| **0040** | 40 PSI |
| **0080** | 80 PSI |
| **0150** | 150 PSI |
| **0200** | 200 PSI |

**BODIES**

| | |
|---|---|
| **Blank** | Without Body |
| **N** | 1/4" NPTF Ports |
| **S** | #6 SAE Ports |

**WARNING:** *the specifications/application data shown in our catalogs and data sheets are intended only as a general guide for the product described (herein). Any specific application should not be undertaken without independent study, evaluation, and testing for suitability.*



Via Malavolti, 36 - 41122 Modena - ITALY - Phone +39 (059) 254895 - Fax +39 (059) 253512 - mail: tecnord@tecnord.com - **www.tecnord.com**

## TR-PCA PRESSURE COMPENSATING REGULATOR VALVE

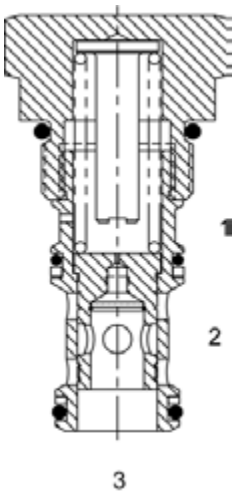


### DESCRIPTION

12 size, 1 1/16-12 thread, “Tecnord” series, pressure compensating regulator valve.

### OPERATION

The TR-PCA-0P with an orifice between ports (3) and (1) maintains a constant flow rate from (3) regardless of load pressure changes in the system upstream of (3), or in the bypass leg at (2) as long as pressure at (2) is less than (1). The valve’s spool maintains a constant differential pressure across an external orifice, thereby regulating the hydraulic flow rate across this external orifice (see options table for pressure ranges). When used with an orifice as described above, it functions as a priority type regulator, delivering pump flow first to the external orifice, then bypassing excess to (2). All ports may be fully pressurized. The TR-PCA-0V with a dump valve and a pilot relief valve at (1) acts as main stage of a ventable relief valve.

### FEATURES

- Hardened parts for long life.
- Industry common cavity.

### HYDRAULIC SYMBOL

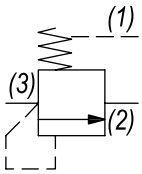


*Can be used as a logic element. TR-PCA-0P is commonly used as a bypass flow regulator (90 and 150 PSI recommended). TR-PCA-0V is commonly used as the main stage of a ventable relief valve (50 and 90 PSI recommended).*

### PERFORMANCE

Actual Test Data (Cartridge Only)

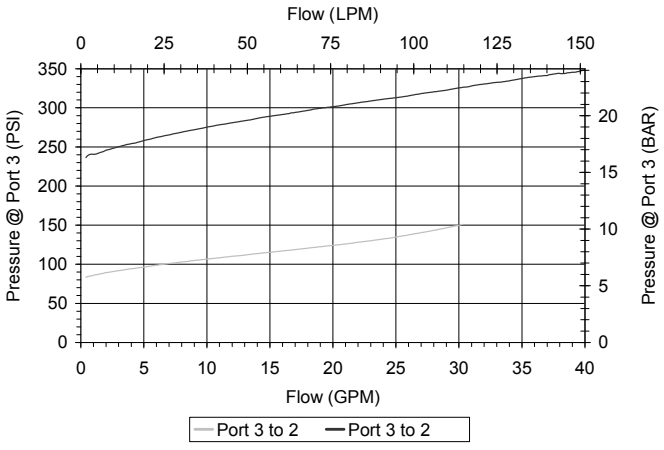


### VALVE SPECIFICATIONS

| | |
|---|---|
| Nominal Flow | 40 GPM (151 LPM) |
| Rated Operating Pressure | 3500 PSI (241 bar) |
| Seat Ratio | Area of Pilot is equal to the area at Port (3) |
| Viscosity Range | 36 to 3000 SSU (3 to 647 cSt) |
| Filtration | ISO 18/16/13 |
| Media Operating Temp. Range | -40° to 250°F (-40° to 120°C) |
| Weight | .54 lbs (.24 kg) |
| Operating Fluid Media | General Purpose Hydraulic Fluid |
| Cartridge Torque Requirements | 70 ft-lbs (95 Nm) |
| Cavity | TECNORD 3WS |
| Cavity Form Tool (Finishing) | 40500033 |
| Seal Kit | 21191306 |

**WARNING:** *the specifications/application data shown in our catalogs and data sheets are intended only as a general guide for the product described (herein). Any specific application should not be undertaken without independent study, evaluation, and testing for suitability.*



Via Malavolti, 36 - 41122 Modena - ITALY - Phone +39 (059) 254895 - Fax +39 (059) 253512 - mail: tecnord@tecnord.com - **www.tecnord.com**

## DIMENSIONS

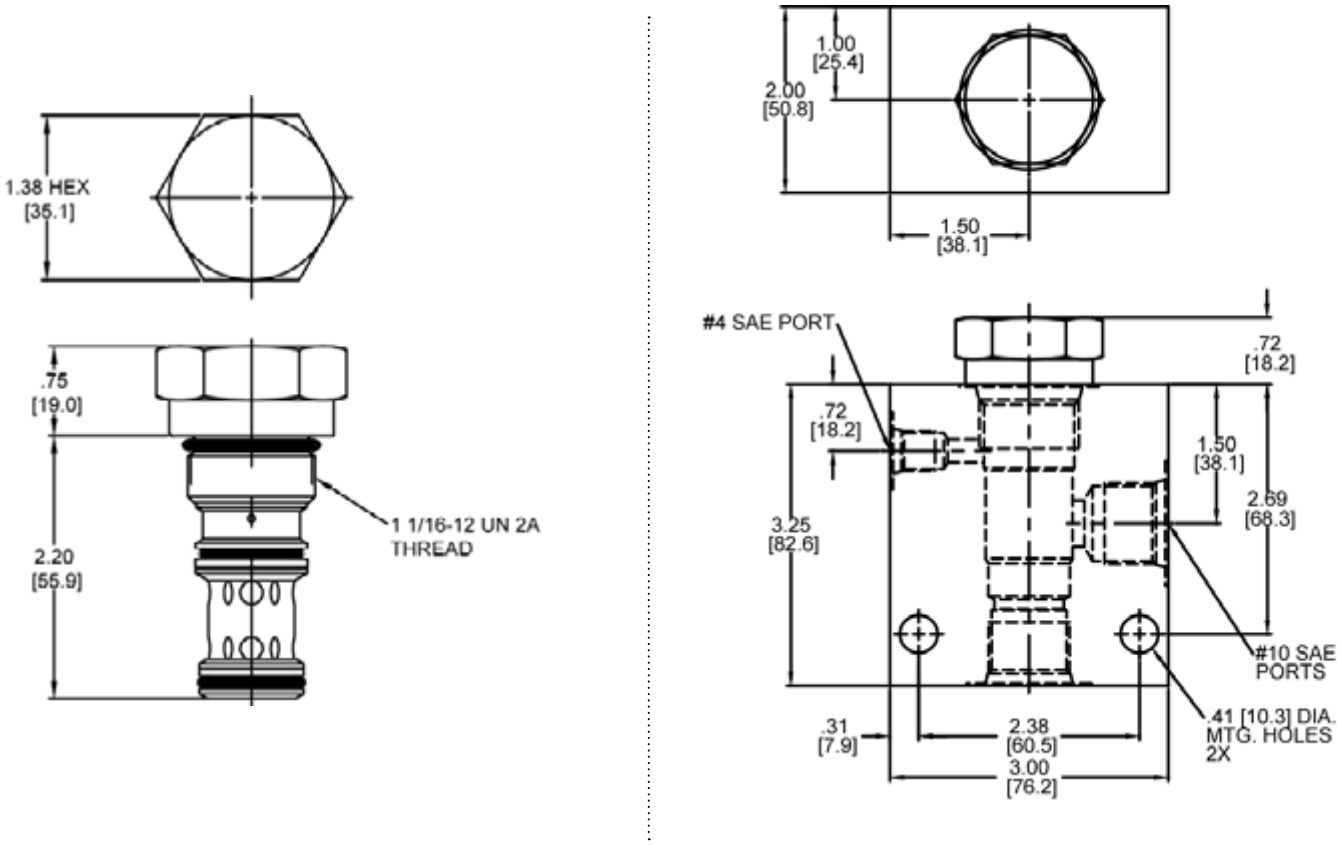


*Body Weight: 1.56 lbs (.70 kg)*

## ORDERING INFORMATION

**TR-PCA – ____ – ____ – ____**

**OPTIONS**

| | |
|---|---|
| Buna, Pilot to Close | **0P** |
| Viton, Pilot to Close | **VP** |
| Buna, Vent to Open | **0V** |
| Viton, Vent to Open | **VV** |

**Δ P SETTING**
**@ 1 GPM with Pilot Vented**

| | |
|---|---|
| **0020** | 20 PSI |
| **0050** | 50 PSI |
| **0090** | 90 PSI |
| **0150** | 150 PSI |
| **0230** | 230 PSI |
| | ±10% |

**BODIES**

| | |
|---|---|
| **Blank** | Without Body |
| **S** | #10 SAE Ports |

**WARNING:** *the specifications/application data shown in our catalogs and data sheets are intended only as a general guide for the product described (herein). Any specific application should not be undertaken without independent study, evaluation, and testing for suitability.*



Via Malavolti, 36 - 41122 Modena - ITALY - Phone +39 (059) 254895 - Fax +39 (059) 253512 - mail: tecnord@tecnord.com - **www.tecnord.com**

## SL-PCA PRESSURE COMPENSATING REGULATOR VALVE

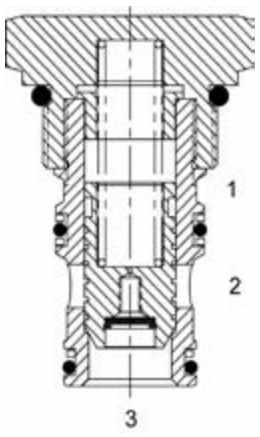


### DESCRIPTION

16 size, 1 5/16-12 thread, “Super” series, pressure compensating regulator valve.

### OPERATION

The SL-PCA-0P with an external orifice between ports (3) and (1) maintains a constant flow rate across the external orifice, regardless of load pressure changes in the system upstream of (3), or in the bypass leg at (2) as long as pressure at (2) is less than (1). The valve’s spool maintains a constant differential pressure across the external orifice, thereby regulating the hydraulic flow rate across the external orifice (see options table for pressure ranges). When used with an orifice as described above, it functions as a priority type regulator, delivering pump flow first to the external orifice, then bypassing excess to (2). All ports may be fully pressurized. The SL-PCA-0V with a dump valve and a pilot relief valve at (1) acts as main stage of a ventable relief valve.

### FEATURES

- Hardened parts for long life.
- Industry common cavity.

*Can be used as a logic element. SL-PCA-0P is commonly used as a bypass flow regulator (100 PSI recommended). SL-PCA-0V is commonly used as the main stage of a ventable relief valve (50 and 100 PSI recommended).*

### HYDRAULIC SYMBOL

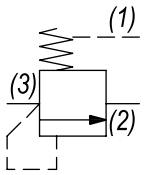


### VALVE SPECIFICATIONS

| | |
|---|---|
| Nominal Flow | 40 GPM (151 LPM) |
| Rated Operating Pressure | 3500 PSI (241 bar) |
| Seat Ratio | Initially area of Pilot is 1.2 times the area at Port (3), then 1:1 |
| Viscosity Range | 36 to 3000 SSU (3 to 647 cSt) |
| Filtration | ISO 18/16/13 |
| Media Operating Temp. Range | -40° to 250°F (-40° to 120°C) |
| Weight | .70 lbs (.32 kg) |
| Operating Fluid Media | General Purpose Hydraulic Fluid |
| Cartridge Torque Requirements | 90 ft-lbs (122 Nm) |
| Cavity | SUPER 3WS |
| Cavity Form Tool (Finishing) | 40500021 |
| Seal Kit | 21191406 |

### PERFORMANCE

Actual Test Data (Cartridge Only)

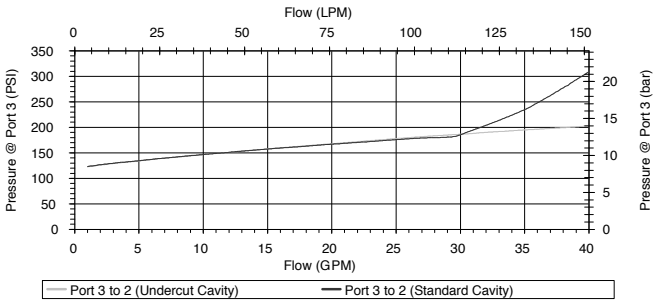


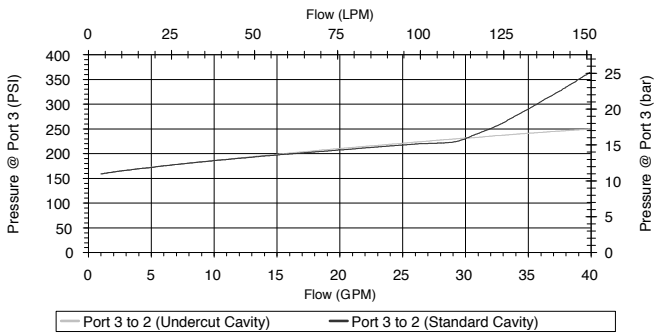


**WARNING:** *the specifications/application data shown in our catalogs and data sheets are intended only as a general guide for the product described (herein). Any specific application should not be undertaken without independent study, evaluation, and testing for suitability.*



Via Malavolti, 36 - 41122 Modena - ITALY - Phone +39 (059) 254895 - Fax +39 (059) 253512 - mail: tecnord@tecnord.com - **www.tecnord.com**

## DIMENSIONS

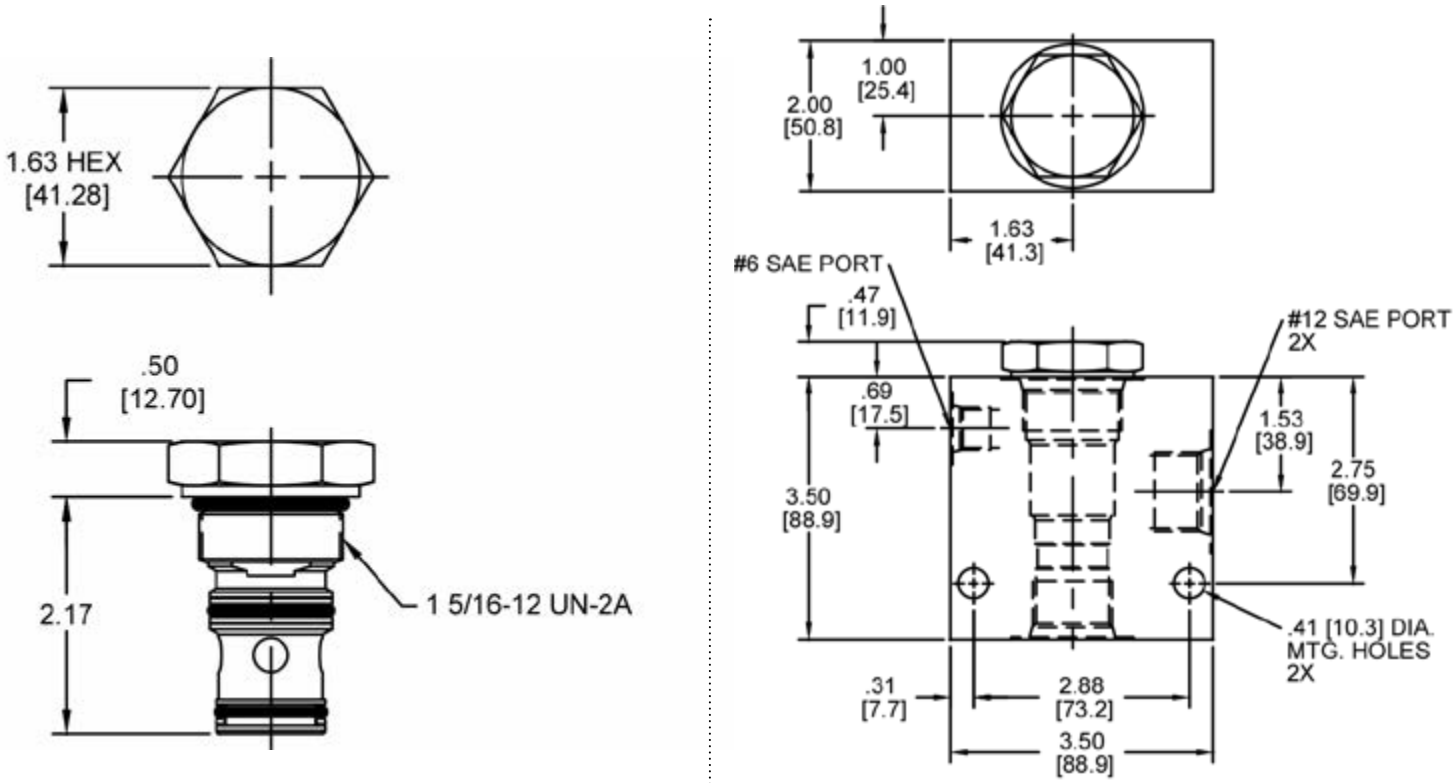


*Body Weight: 1.89 lbs (.86 kg)*

## ORDERING INFORMATION

**SL-PCA – ____ – ____ – ____**

**OPTIONS**

| | |
|---|---|
| Buna, Pilot to Close | **0P** |
| Viton, Pilot to Close | **VP** |
| Buna, Vent to Open | **0V** |
| Viton, Vent to Open | **VV** |
| Buna, Pilot to Close with Seals | **0B** |
| Viton, Pilot to Close with Seals | **VB** |
| Buna, Vent to Open with Seals | **0C** |
| Viton, Vent to Open with Seals | **VC** |

**Δ P SETTING**
**@ 1 GPM with Pilot Vented**

| | |
|---|---|
| **0020** | 20 PSI |
| **0050** | 50 PSI |
| **0100** | 100 PSI |
| **0150** | 150 PSI |

**BODIES**

| | |
|---|---|
| **Blank** | Without Body |
| **S** | #12 SAE Ports |

**WARNING:** *the specifications/application data shown in our catalogs and data sheets are intended only as a general guide for the product described (herein). Any specific application should not be undertaken without independent study, evaluation, and testing for suitability.*



Via Malavolti, 36 - 41122 Modena - ITALY - Phone +39 (059) 254895 - Fax +39 (059) 253512 - mail: tecnord@tecnord.com - **www.tecnord.com**

## DG-PCB PRESSURE COMPENSATING VALVE, RESTRICTIVE TYPE WITH BY-PASS

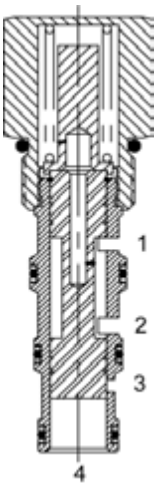


### DESCRIPTION

10 size, 7/8-14 thread, “Delta” series, pressure compensating valve, restrictive type with bypass.

### OPERATION

The DG-PCB allows pressure compensated or proportional flow from (1) to (2) regulated by the pressure differential across (1) and (4) with a bypass of (4) to (3). The spring chamber is constantly connected at (1).

### FEATURES

- Hardened parts for long life.
- Industry common cavity.

### HYDRAULIC SYMBOL

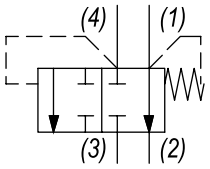


*DG-PCB is not intended for differential pressure more than 1500 PSI from (4) to (3). Consult Factory for abrupt pressure change applications that exceed 1500 PSI, for alternative products.*

### PERFORMANCE

Actual Test Data (Cartridge Only with 150 PSI Spring)

10 GPM Supply flow, .110” Orifice, 150 PSI spring
15 GPM Suply flow, .156” Orifice, 150 PSI spring - 1500 PSI load on port (3)

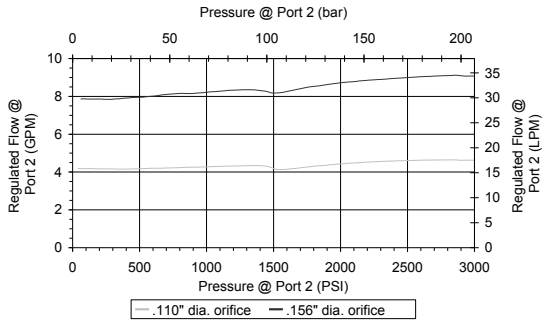


Priority port (2) load: 1500-1700 psi, .156” dia orifice, 15 gpm supply
not intended for differential pressure > 1500 psi port (4) to port (3)

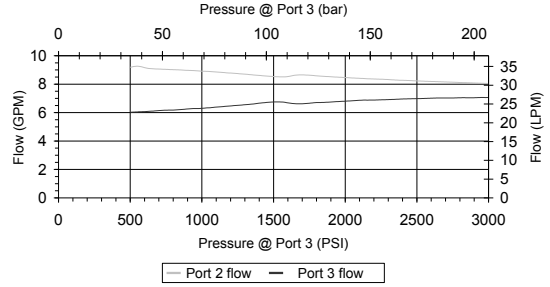


Priority port (2) load: 1500-1700 PSI, .110” dia orifice, 10 GPM supply
not intended for differential pressure > 1500 PSI port (4) to port (3)

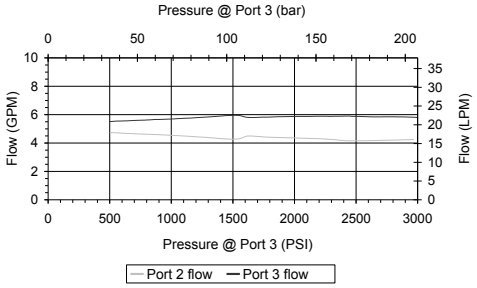


### VALVE SPECIFICATIONS

| | |
|---|---|
| Nominal Flow | 10 GPM (38 LPM) |
| Rated Operating Pressure | 3500 PSI (241 bar) |
| Typical Internal Leakage (150 SSU) | 5 cu in/min (82 ml/min) per path |
| Viscosity Range | 36 to 3000 SSU (3 to 647 cSt) |
| Filtration | ISO 18/16/13 |
| Media Operating Temp. Range | -40° to 250°F (-40° to 120°C) |
| Weight | .38 lbs (.17 kg) |
| Operating Fluid Media | General Purpose Hydraulic Fluid |
| Cartridge Torque Requirements | 30 ft-lbs (40.6 Nm) |
| Cavity | DELTA 4W |
| Cavity Form Tool (Finishing) | 40500002 |
| Seal Kit | 21191214 |

**WARNING:** *the specifications/application data shown in our catalogs and data sheets are intended only as a general guide for the product described (herein). Any specific application should not be undertaken without independent study, evaluation, and testing for suitability.*



Via Malavolti, 36 - 41122 Modena - ITALY - Phone +39 (059) 254895 - Fax +39 (059) 253512 - mail: tecnord@tecnord.com - **www.tecnord.com**

## DIMENSIONS

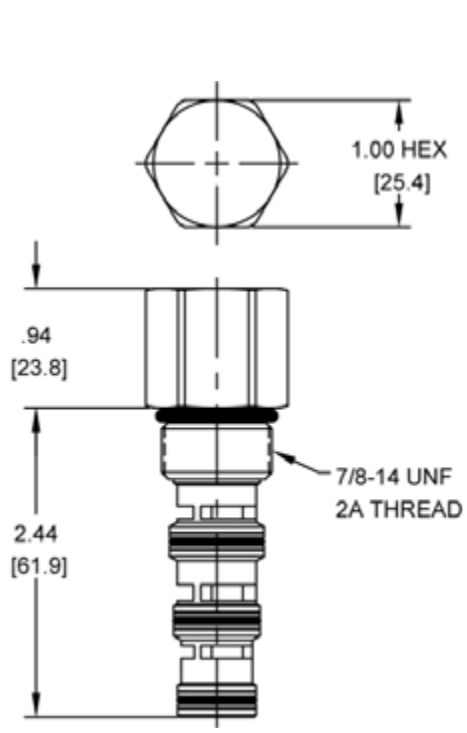


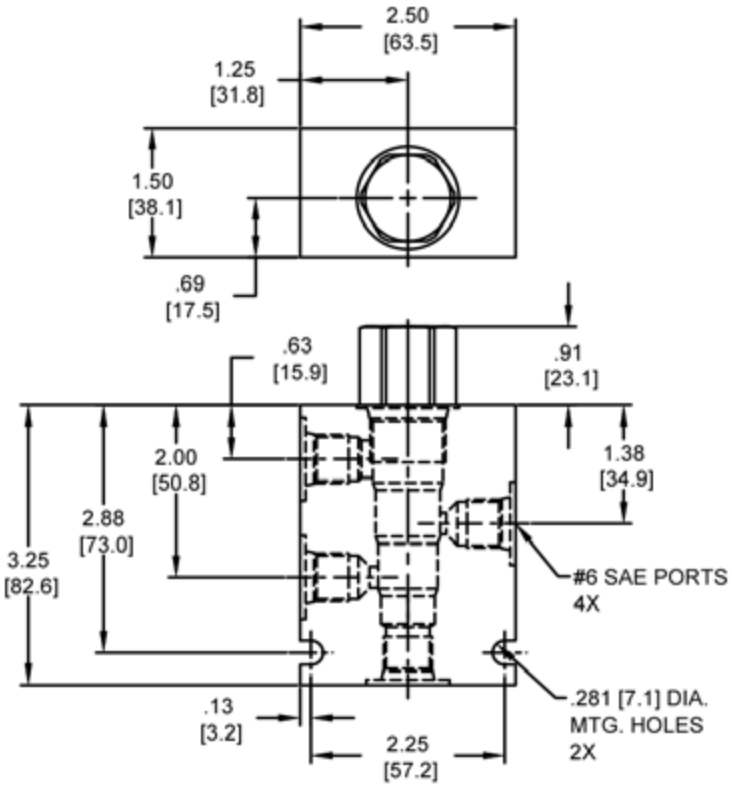


*Body Weight: .99 lbs (.45 kg)*

## ORDERING INFORMATION

**DG-PCB – ____ – ____ – ____**

**OPTIONS**

| | |
|---|---|
| Buna Standard | **00** |
| Viton Standard | **V0** |

**PRESSURE DIFFERENTIAL**

| | |
|---|---|
| **0150** | 150 PSI |
| **0250** | 250 PSI |

Differential Pressure Across
External Controlling Orifice

**BODIES**

| | |
|---|---|
| **Blank** | Without Body |
| **N** | 1/4" NPTF Ports |
| **S** | #6 SAE Ports |

**WARNING:** *the specifications/application data shown in our catalogs and data sheets are intended only as a general guide for the product described (herein). Any specific application should not be undertaken without independent study, evaluation, and testing for suitability.*



Via Malavolti, 36 - 41122 Modena - ITALY - Phone +39 (059) 254895 - Fax +39 (059) 253512 - mail: tecnord@tecnord.com - **www.tecnord.com**

## DG-TCB PRESSURE COMPENSATING VALVE, RESTRICTIVE TYPE WITH BYPASS

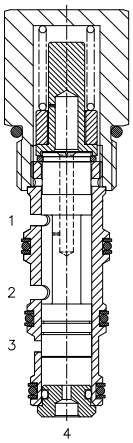


### DESCRIPTION

10 size, 7/8-14 thread, “Delta” series, pressure compensating valve, restrictive type with bypass.

### OPERATION

The DG-TCB allows pressure compensated or proportional flow from (1) to (2) regulated by the pressure differential across (1) and (4) with a bypass of (4) to (3). The spring chamber is constantly connected at (1).

### FEATURES

- Hardened parts for longer life.
- Industry common cavity.

*Bypass line (3) can be pressurized.*

### HYDRAULIC SYMBOL

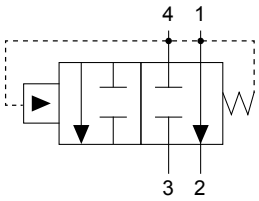


### PERFORMANCE

Actual Test Data (Cartridge Only)

### VALVE SPECIFICATIONS

| | |
|---|---|
| Nominal Flow | 10 GPM (38 LPM) |
| Rated Operating Pressure | 3500 PSI (241 bar) |
| Typical Internal Leakage (150 SSU) | 5 cu in/min (82 ml/min) per path |
| Viscosity Range | 36 to 3000 SSU (3 to 647 cSt) |
| Filtration | ISO 18/16/13 |
| Media Operating Temp. Range | -40° to 250°F (-40° to 120°C) |
| Weight | .38 lbs (.17 kg) |
| Operating Fluid Media | General Purpose Hydraulic Fluid |
| Cartridge Torque Requirements | 30 ft-lbs (40.6 Nm) |
| Cavity | DELTA 4W |
| Cavity Tools Kit (form tool, reamer, tap) | 40500002 |
| Seal Kit | 21191214 |

*10 GPM supply flow, .110” orifice, 150 PSI spring - 15 GPM supply flow, .156” orifice, 150 PSI spring - 1500 PSI load on port 3*

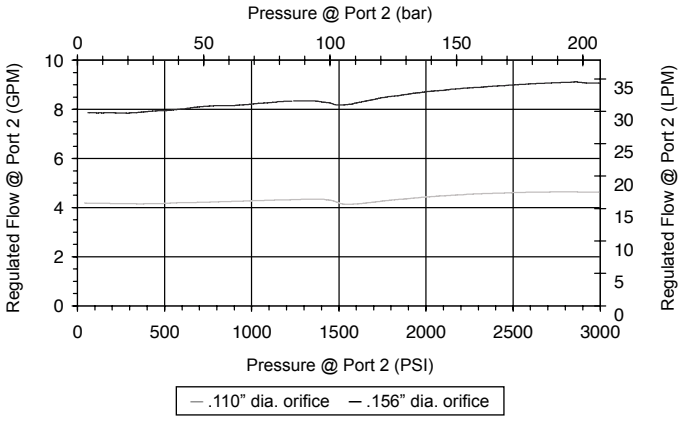


*Priority port 2 load: 1500 - 1700 PSI, .156” dia orifice, 15 GPM supply not intended for differential pressure > 1500 PSI port 4 to port 3*

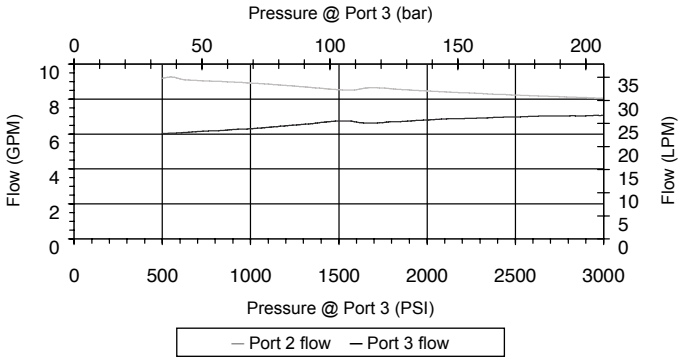


**WARNING:** *the specifications/application data shown in our catalogs and data sheets are intended only as a general guide for the product described (herein). Any specific application should not be undertaken without independent study, evaluation, and testing for suitability.*



Via Malavolti, 36 - 41122 Modena - ITALY - Phone +39 (059) 254895 - Fax +39 (059) 253512 - mail: tecnord@tecnord.com - **www.tecnord.com**

## DIMENSIONS

*Priority port 2 load: 1500 - 1700 PSI, .110" dia orifice, 10 GPM supply*
*not intended for differential pressure > 1500 PSI port 4 to port 3*

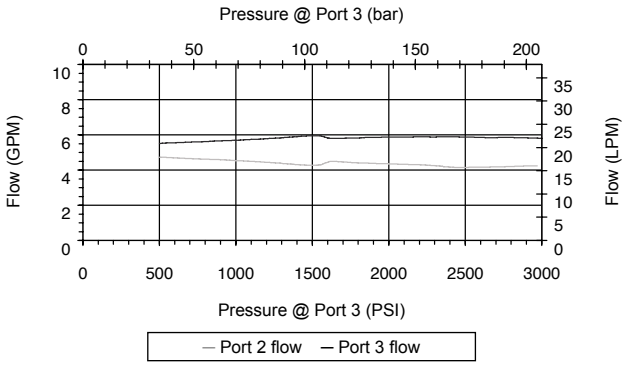


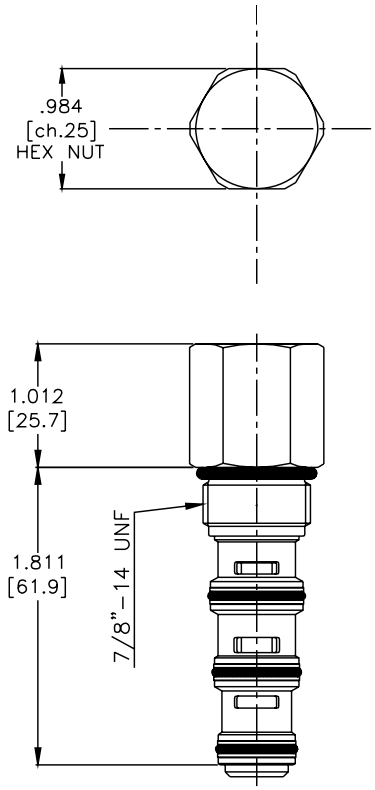


*(for bodies style and sizes see section "Accessories")*

## ORDERING INFORMATION

**DG-TCB – ____ – ____ – ____**

**OPTIONS**

| | |
|---|---|
| Buna Standard | **00** |
| Viton Standard | **V0** |

**BODIES**

| | |
|---|---|
| **Blank** | Without Body |
| **N** | 3/8" BSP Ports |
| **S** | #6 SAE Ports |

**PRESSURE SETTINGS**

| | |
|---|---|
| **014** | 14 bar (200 PSI) |
| **020** | 20 bar (285 PSI) |
| **032** | 32 bar (460 PSI) |

Differential Pressure Across
External Controlling Orifice

**WARNING:** *the specifications/application data shown in our catalogs and data sheets are intended only as a general guide for the product described (herein). Any specific application should not be undertaken without independent study, evaluation, and testing for suitability.*



Via Malavolti, 36 - 41122 Modena - ITALY - Phone +39 (059) 254895 - Fax +39 (059) 253512 - mail: tecnord@tecnord.com - **www.tecnord.com**

## PP-PCC FIXED PRESSURE COMPENSATING REGULATOR VALVE - RESTRICTIVE TYPE

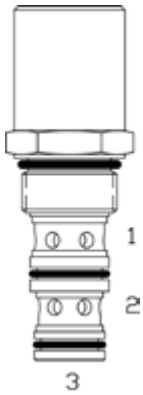


### DESCRIPTION

8 size, 3/4-16 thread, “Power” series, pressure compensating regulator valve (restrictive type).

### OPERATION

The PP-PCC-00 with an external orifice beyond port (3) and sensed by port (1) maintains a constant flow rate from (3) regardless of load pressure changes in the system downstream of (3), or in the inlet at (2) as long as pressure at (3) is above (1) by more then spring setting chosen and pump supply is in excess of demand. The valve’s spool maintains a constant differential pressure across an external orifice, thereby regulating the hydraulic flow rate across this external orifice (see options table for pressure ranges). When used with an orifice as described above, it functions as a restrictive type regulator, delivering pump flow through the external orifice. All ports may be fully pressurized.

### FEATURES

- Hardened parts for long life.
- Industry common cavity.

### HYDRAULIC SYMBOL

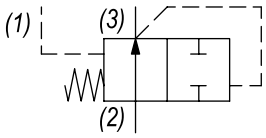


*Can be used as a logic element. Fixed setting pressure reducing valve. For adjustable setting see PP-PCD. PP-PCC-00-0100 is recommended for regulated flows up to 4.0 GPM only. PP-PCC-00-0220 is recommended for regulated flows up to 8.0 GPM. For fixed pressure reducing/relieving valve see PP-PCP.*

### PERFORMANCE

Actual Test Data (Cartridge Only)

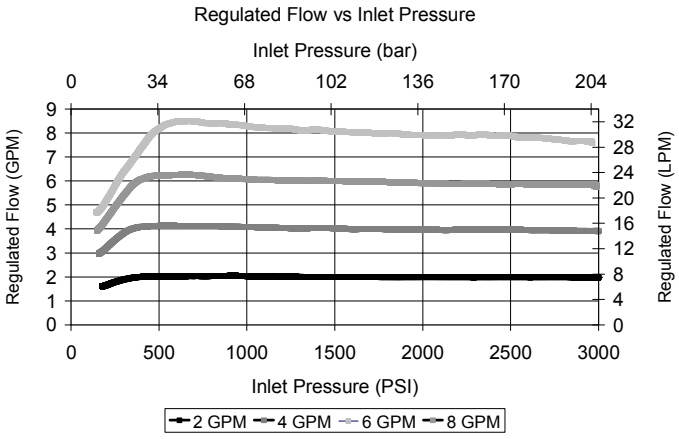


### VALVE SPECIFICATIONS

| | |
|---|---|
| Nominal Flow | 8 GPM (30 LPM) |
| Rated Operating Pressure | 3000 PSI (207 bar) |
| Ratio | Area of Pilot is equal to the area at Port (3) |
| Viscosity Range | 36 to 3000 SSU (3 to 647 cSt) |
| Filtration | ISO 18/16/13 |
| Media Operating Temp. Range | -40° to 250°F (-40° to 120°C) |
| Weight | .25 lbs (.11 kg) |
| Operating Fluid Media | General Purpose Hydraulic Fluid |
| Cartridge Torque Requirements | 25 ft-lbs (34 Nm) |
| Cavity | POWER 3W |
| Cavity Form Tool (Finishing) | 40500024 |
| Seal Kit | 21191111 |

**WARNING:** *the specifications/application data shown in our catalogs and data sheets are intended only as a general guide for the product described (herein). Any specific application should not be undertaken without independent study, evaluation, and testing for suitability.*



Via Malavolti, 36 - 41122 Modena - ITALY - Phone +39 (059) 254895 - Fax +39 (059) 253512 - mail: tecnord@tecnord.com - **www.tecnord.com**

## DIMENSIONS

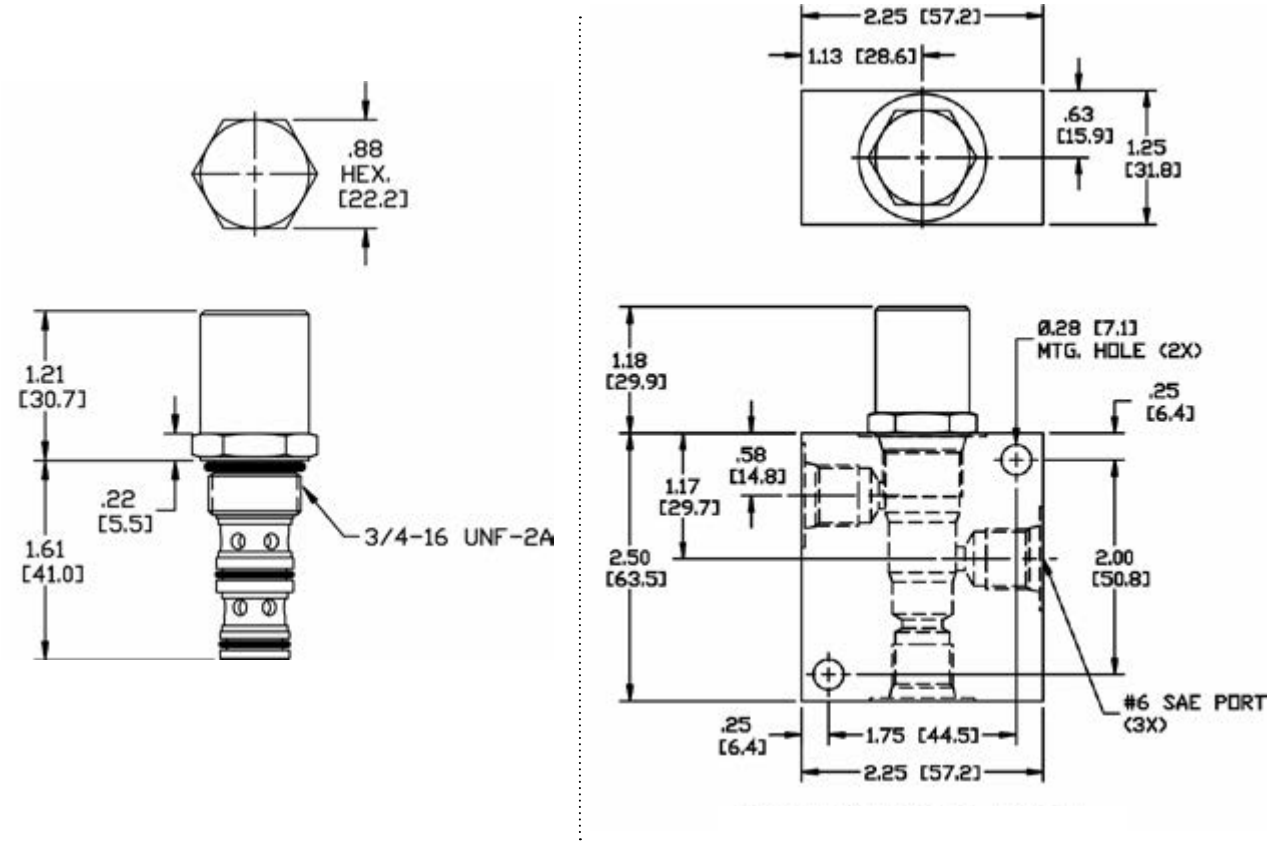


*Body Weight: .56 lbs (.25 kg)*

## ORDERING INFORMATION

**PP-PCC – ____ – ____ – ____**

**OPTIONS**

| | |
|---|---|
| Buna Standard | **00** |
| Viton Standard | **V0** |
| *Urethane, Standard | **U0** |
| Buna, Screen | **A0** |
| Viton, Screen | **W0** |
| Urethane, Screen | **Y0** |

***Urethane seals are recommended when inlet pressures exceed 1500 PSI**

**Δ P SETTING**

| | |
|---|---|
| **0100** | 100 PSI |
| **0220** | 220 PSI |

**BODIES**

| | |
|---|---|
| **Blank** | Without Body |
| **S** | #6 SAE Ports |

**WARNING:** *the specifications/application data shown in our catalogs and data sheets are intended only as a general guide for the product described (herein). Any specific application should not be undertaken without independent study, evaluation, and testing for suitability.*



Via Malavolti, 36 - 41122 Modena - ITALY - Phone +39 (059) 254895 - Fax +39 (059) 253512 - mail: tecnord@tecnord.com - **www.tecnord.com**

## DF-CP2 PRESSURE COMPENSATING/REDUCING VALVE

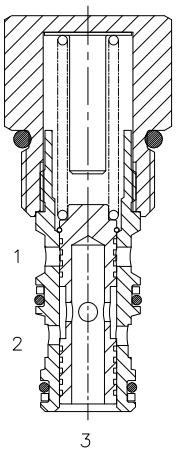


### DESCRIPTION

10 size, 7/8-14 thread, “Delta” series, 2 ways pressure compensating/reducing valve.

### OPERATION

The DF-CP2 allows pressure compensated flow from (2) to (3) regulated by the pressure present at (1). Pressure differential between (3) and (1) is fixed at 8/14/18 bar (according to the pressure settings). These are minimum values, increasing with the flow because of the pressure drop through the valve (see graph).When used with (1) connected to a drain line, it works as pressure reducing valve.

### FEATURES

- Hardened parts for long life.
- Industry common cavity.
- Spring range 8 to 18 bar.

*Pressure compensator for 2 way flow control, typically used with an external orifice inline with port (3). Port (1) should sense upstream pressure of orifice.*

### HYDRAULIC SYMBOL

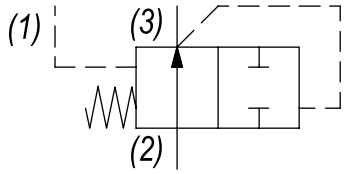


### PERFORMANCE

Actual Test Data (Cartridge Only)

### VALVE SPECIFICATIONS

| | |
|---|---|
| Nominal Flow | 8 GPM (30 LPM) |
| Rated Operating Pressure | 3500 PSI (241 bar) |
| Typical Internal Leakage (150 SSU) | 35 ml/min @ 250 bar |
| Viscosity Range | 36 to 3000 SSU (3 to 647 cSt) |
| Filtration | ISO 18/16/13 |
| Media Operating Temp. Range | -25° to +95°C |
| Weight | .35 lbs (.16 kg) |
| Operating Fluid Media | General Purpose Hydraulic Fluid |
| Cartridge Torque Requirements | 33 ft-lbs (45 Nm) |
| Cavity | DELTA 3W |
| Cavity Tools Kit (form tool, reamer, tap) | 40500001 |
| Seal Kit | 210902025 |

**Pressure Drop (bar) vs. Flow (lt/min)**

*For various pressure compensator settings (bar)*

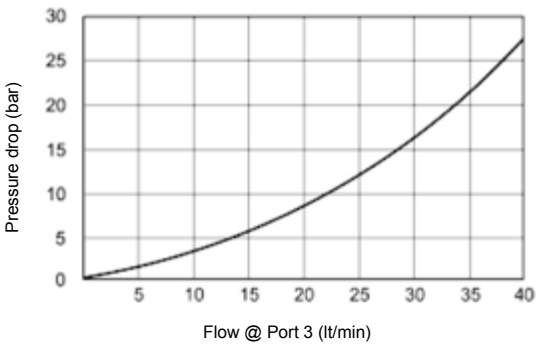


**DF-CP2 008 - Flow (lt/min) vs. inlet pressure (bar)**

*For various orifice diameters (mm)*

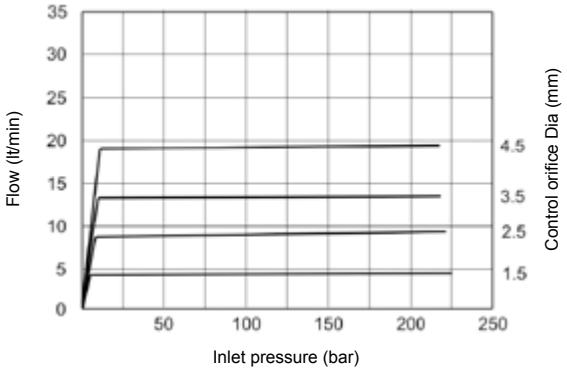


**WARNING:** *the specifications/application data shown in our catalogs and data sheets are intended only as a general guide for the product described (herein). Any specific application should not be undertaken without independent study, evaluation, and testing for suitability.*



Via Malavolti, 36 - 41122 Modena - ITALY - Phone +39 (059) 254895 - Fax +39 (059) 253512 - mail: tecnord@tecnord.com - **www.tecnord.com**

## DIMENSIONS

**DF-CP2 014 - Flow (lt/min) vs. inlet pressure (bar)**

*For various orifice diameters (mm)*

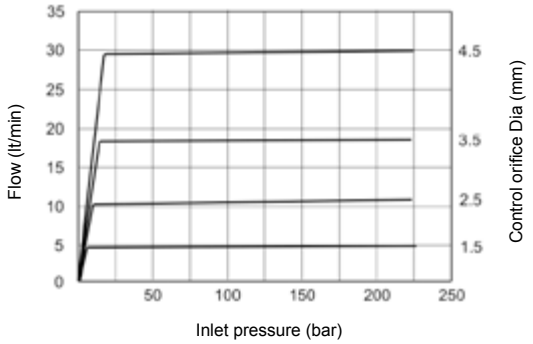


**DF-CP2 018 - Flow (lt/min) vs. inlet pressure (bar)**

*For various orifice diameters (mm)*

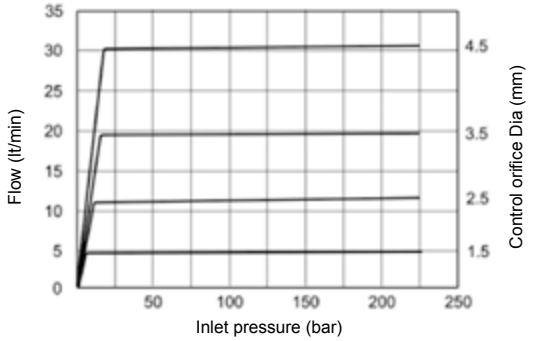


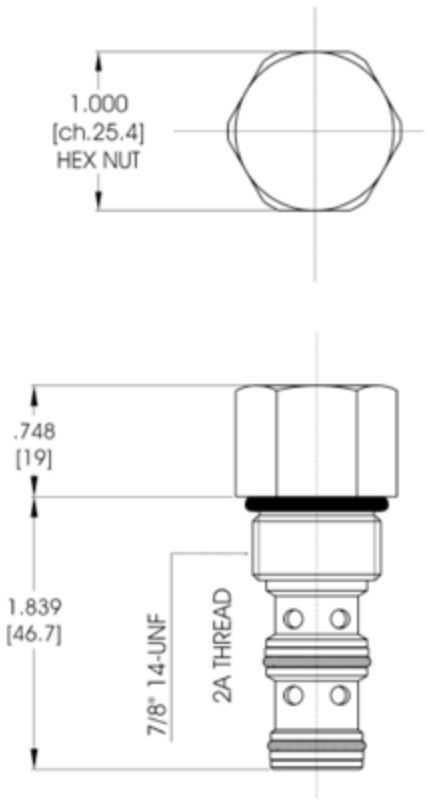


*(for bodies style and sizes see section "Accessories")*

## ORDERING INFORMATION

**DF-CP2 – ____ – ____ – ____**

**OPTIONS**

Buna Standard **00**
Viton Standard **V0**

**PRESSURE SETTINGS**

**008** 8 bar (115 PSI)
**014** 14 bar (200 PSI)
**018** 18 bar (260 PSI)

Differential Pressure Across
External Controlling Orifice

**BODIES**

**Blank** Without Body
**N** 3/8" BSP Ports
**S** #6 SAE Ports

**WARNING:** *the specifications/application data shown in our catalogs and data sheets are intended only as a general guide for the product described (herein). Any specific application should not be undertaken without independent study, evaluation, and testing for suitability.*



Via Malavolti, 36 - 41122 Modena - ITALY - Phone +39 (059) 254895 - Fax +39 (059) 253512 - mail: tecnord@tecnord.com - **www.tecnord.com**

## QC-CP2 PRESSURE COMPENSATING/REDUCING VALVE

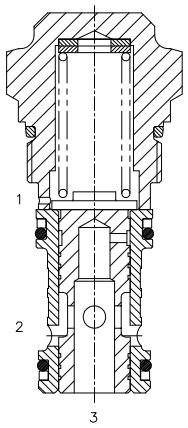


### DESCRIPTION

Special cavity, 2 ways pressure compensating/reducing valve.

### OPERATION

The QC-CP2 allows pressure compensated flow from (2) to (3) regulated by the pressure present at (1). Pressure differential between (3) and (1) is fixed at 8/14/18/24 bar (according to the pressure settings). These are minimum values, increasing with the flow because of the pressure drop through the valve (see graph). When used with (1) connected to a drain line, it works as a fix setting pressure reducing valve.

### FEATURES

- Hardened parts for long life.
- Spring range 8 to 24 bar.

*Pressure compensator for 2 way flow control, typically used with an external orifice inline with port (3). Port (1) should sense upstream pressure of orifice.*

### HYDRAULIC SYMBOL

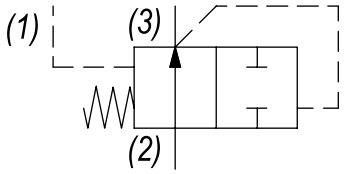


### PERFORMANCE

Actual Test Data (Cartridge Only)

### VALVE SPECIFICATIONS

| | |
|---|---|
| Nominal Flow | 19 GPM (70 LPM) |
| Rated Operating Pressure | 3500 PSI (241 bar) |
| Typical Internal Leakage (150 SSU) | 35 ml/min @ 250 bar |
| Viscosity Range | 36 to 3000 SSU (3 to 647 cSt) |
| Filtration | ISO 18/16/13 |
| Media Operating Temp. Range | -40° to 250°F (-40° to 120°C) |
| Weight | .35 lbs (.16 kg) |
| Operating Fluid Media | General Purpose Hydraulic Fluid |
| Cartridge Torque Requirements | 52 ft-lbs (70 Nm) |
| Cavity | T031 (Special) |
| Cavity Tools Kit (form tool, reamer, tap) | K-T031 |
| Seal Kit | 210902012 |

**Pressure drop (bar) vs. flow (lt/min)**

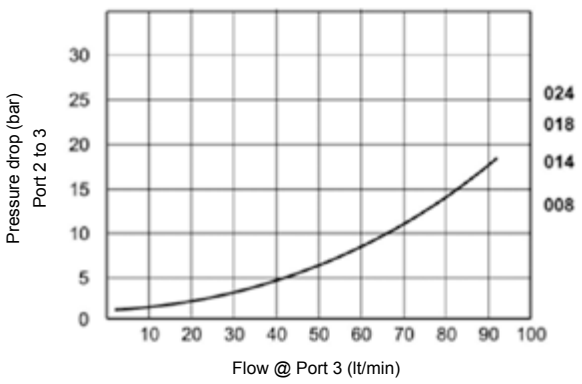


**Flow (lt/min) vs. inlet pressure (bar)**

*For various press. compensator valve settings - Re: control orifice diameter: 5.5 mm*

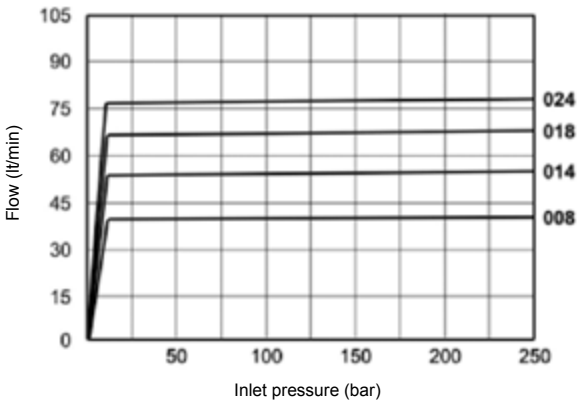


**WARNING:** *the specifications/application data shown in our catalogs and data sheets are intended only as a general guide for the product described (herein). Any specific application should not be undertaken without independent study, evaluation, and testing for suitability.*



Via Malavolti, 36 - 41122 Modena - ITALY - Phone +39 (059) 254895 - Fax +39 (059) 253512 - mail: tecnord@tecnord.com - **www.tecnord.com**

## DIMENSIONS

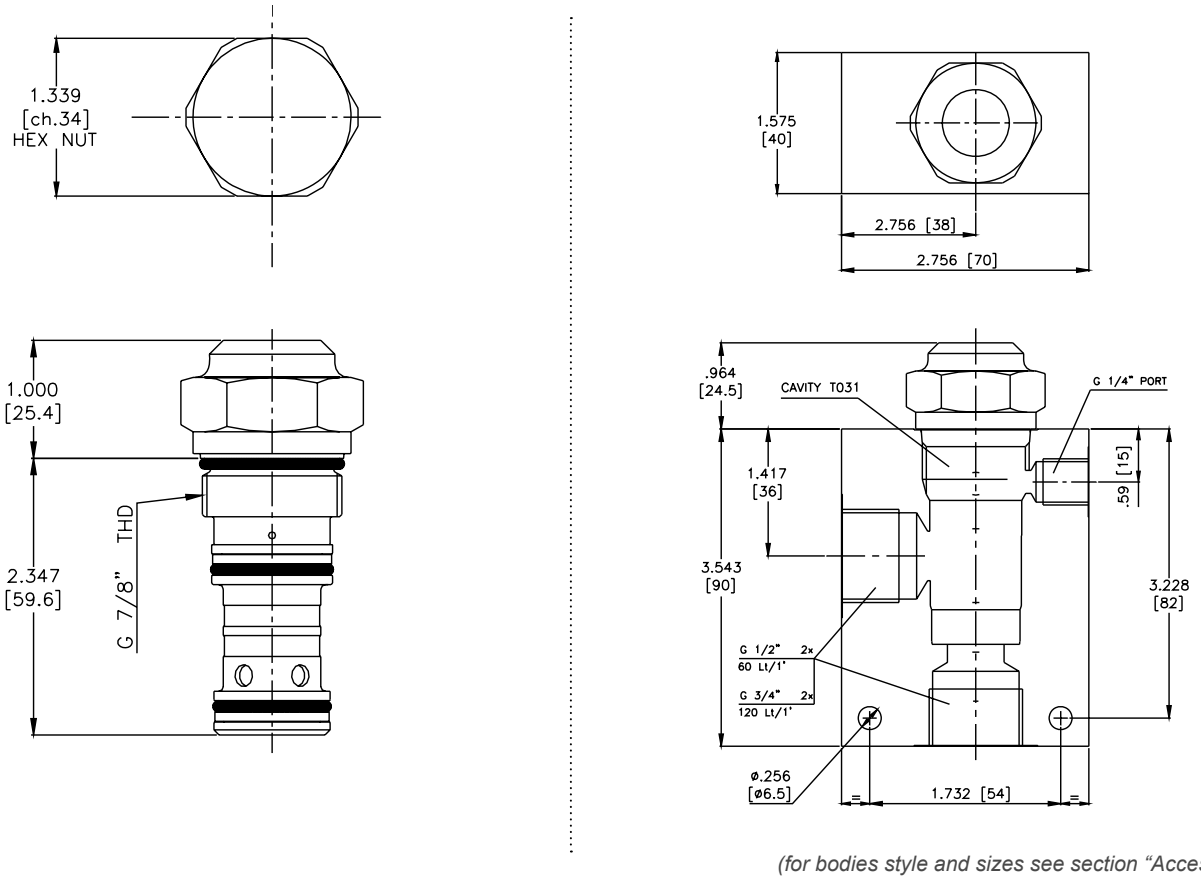


*(for bodies style and sizes see section "Accessories")*

## ORDERING INFORMATION

**QC-CP2 – ____ – ____ – ____**

**OPTIONS**

| | |
|---|---|
| Buna Standard | **00** |
| Viton Standard | **V0** |

**BODIES**

| | |
|---|---|
| **Blank** | Without Body |
| **N** | 1/2" BSP Ports |
| **S** | #8 SAE Ports |

**PRESSURE SETTINGS**

| | |
|---|---|
| **008** | 8 bar (115 PSI) |
| **014** | 14 bar (200 PSI) |
| **018** | 18 bar (260 PSI) |
| **024** | 24 bar (340 PSI) |

Differential Pressure Across
External Controlling Orifice

**WARNING:** *the specifications/application data shown in our catalogs and data sheets are intended only as a general guide for the product described (herein). Any specific application should not be undertaken without independent study, evaluation, and testing for suitability.*



Via Malavolti, 36 - 41122 Modena - ITALY - Phone +39 (059) 254895 - Fax +39 (059) 253512 - mail: tecnord@tecnord.com - **www.tecnord.com**

## TR-PCC PRESSURE COMPENSATING REGULATOR VALVE – RESTRICTIVE TYPE

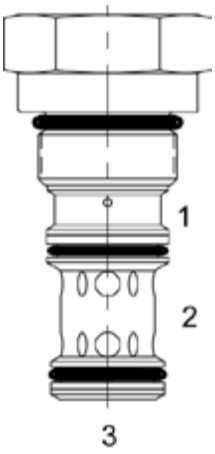


### DESCRIPTION

12 size, 1 1/16-12 thread, “Tecnord” series, pressure compensating regulator valve (restrictive type).

### OPERATION

The TR-PCC with an external orifice beyond port (3) and sensed by port (1) maintains a constant flow rate from (3) regardless of load pressure changes in the system downstream of (3), or in the inlet at (2) as long as pressure at (3) is greater than (1) by more than spring setting chosen and pump supply is in excess of demand. The valve’s spool maintains a constant differential pressure across an external orifice, thereby regulating the hydraulic flow rate across this external orifice (see table for pressure ranges). When used with an orifice as described above, it functions as a restrictive type regulator, delivering pump flow through the external orifice. All ports may be fully pressurized.

### FEATURES

- Hardened parts for long life.
- Industry common cavity.

### HYDRAULIC SYMBOL

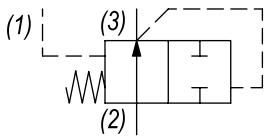


*Can be used as a logic element. Fixed setting pressure reducing valve. For adjustable setting see TR-PCD.*

### PERFORMANCE

Actual Test Data (Cartridge Only)

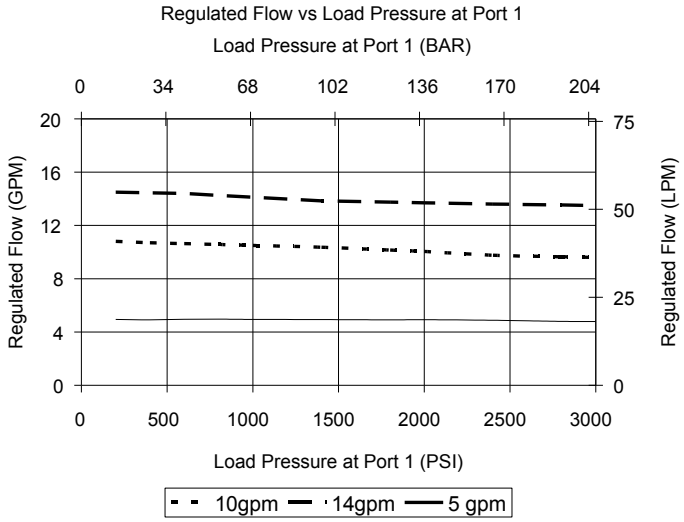


### VALVE SPECIFICATIONS

| | |
|---|---|
| Nominal Flow | 20 GPM (76 LPM) |
| Rated Operating Pressure | 3500 PSI (241 bar) |
| Seat Ratio | Area of Pilot is equal to the area at Port (3) |
| Viscosity Range | 36 to 3000 SSU (3 to 647 cSt) |
| Filtration | ISO 18/16/13 |
| Media Operating Temp. Range | -40° to 250°F (-40° to 120°C) |
| Weight | .54 lbs (.24 kg) |
| Operating Fluid Media | General Purpose Hydraulic Fluid |
| Cartridge Torque Requirements | 70 ft-lbs (95 Nm) |
| Cavity | TECNORD 3WS |
| Cavity Form Tool (Finishing) | 40500033 |
| Seal Kit | 21191306 |

**WARNING:** *the specifications/application data shown in our catalogs and data sheets are intended only as a general guide for the product described (herein). Any specific application should not be undertaken without independent study, evaluation, and testing for suitability.*



Via Malavolti, 36 - 41122 Modena - ITALY - Phone +39 (059) 254895 - Fax +39 (059) 253512 - mail: tecnord@tecnord.com - **www.tecnord.com**

## DIMENSIONS

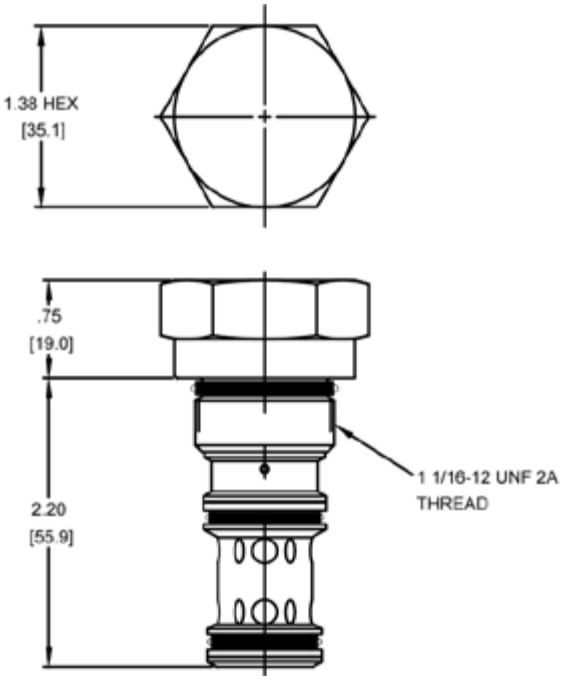


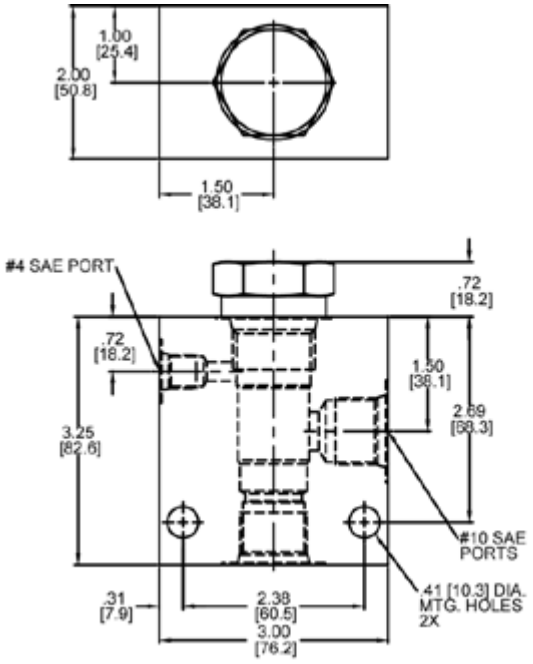


*Body Weight: 1.56 lbs (.70 kg)*

## ORDERING INFORMATION

**TR-PCC – ____ – ____ – ____**

**OPTIONS**
Buna **0P**
Viton **VP**

**Δ P SETTING**
**@ 1 GPM with Pilot Vented**
**0080** 80 PSI
**0150** 150 PSI

**BODIES**
**Blank** Without Body
**S** #10 SAE Ports

**WARNING:** *the specifications/application data shown in our catalogs and data sheets are intended only as a general guide for the product described (herein). Any specific application should not be undertaken without independent study, evaluation, and testing for suitability.*



Via Malavolti, 36 - 41122 Modena - ITALY - Phone +39 (059) 254895 - Fax +39 (059) 253512 - mail: tecnord@tecnord.com - **www.tecnord.com**

## DF-PCE ADJUSTABLE PRESSURE COMPENSATING VALVE, BYPASS TYPE

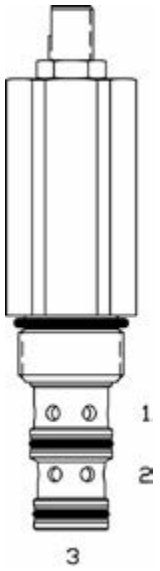


### DESCRIPTION

10 size, 7/8-14 thread, “Delta” series, spring adjustable pressure compensating valve, bypass type.

### OPERATION

The DF-PCE with an external orifice in parallel with ports (3) and (1) maintains a constant flow rate across the external orifice, regardless of load pressure changes in the system upstream of (3), or in the bypass leg at (2) as long as pressure at (2) is greater than (1). The valve’s spool maintains a constant differential pressure across an external orifice, thereby regulating the hydraulic flow rate across this external orifice (see table for pressure ranges). When used with an orifice as described above, it functions as a bypass type regulator, delivering pump flow through the external orifice.

### FEATURES

- Hardened parts for long life.
- Industry common cavity.

### HYDRAULIC SYMBOL

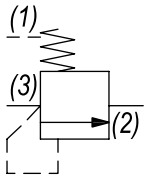


*Can be used as an adjustable logic element. Great as an adjustable pressure setting regulation device in brake, transmission & cooling systems, because the spring chamber is separately drained, the outlet can be used for lower pressure functions. For fixed version see DF-PCR-oP. For higher spring differential pressure ranges consult factory.*

### PERFORMANCE

Actual Test Data (Cartridge Only)

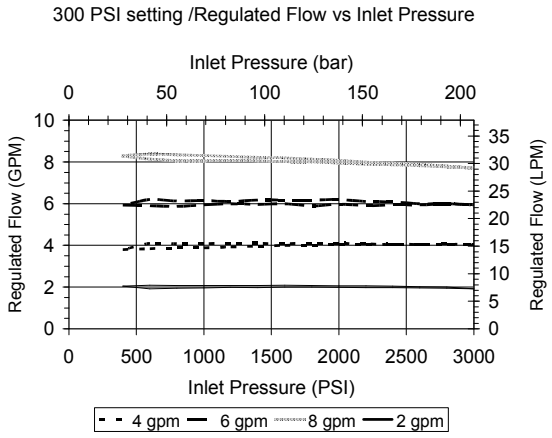


### VALVE SPECIFICATIONS

| | |
|---|---|
| Nominal Flow | 10 GPM (38 LPM) |
| Rated Operating Pressure | 3500 PSI (241 bar) |
| Seat Ratio | Area of Pilot is equal to the area at Port (3) |
| Viscosity Range | 36 to 3000 SSU (3 to 647 cSt) |
| Filtration | ISO 18/16/13 |
| Media Operating Temp. Range | -40° to 250°F (-40° to 120°C) |
| Weight | .52 lbs (.23 kg) |
| Operating Fluid Media | General Purpose Hydraulic Fluid |
| Cartridge Torque Requirements | 30 ft-lbs (40.6 Nm) |
| Cavity | DELTA 3W |
| Cavity Form Tool (Finishing) | 40500001 |
| Seal Kit | 21191210 |

**WARNING:** *the specifications/application data shown in our catalogs and data sheets are intended only as a general guide for the product described (herein). Any specific application should not be undertaken without independent study, evaluation, and testing for suitability.*



Via Malavolti, 36 - 41122 Modena - ITALY - Phone +39 (059) 254895 - Fax +39 (059) 253512 - mail: tecnord@tecnord.com - **www.tecnord.com**

## DIMENSIONS

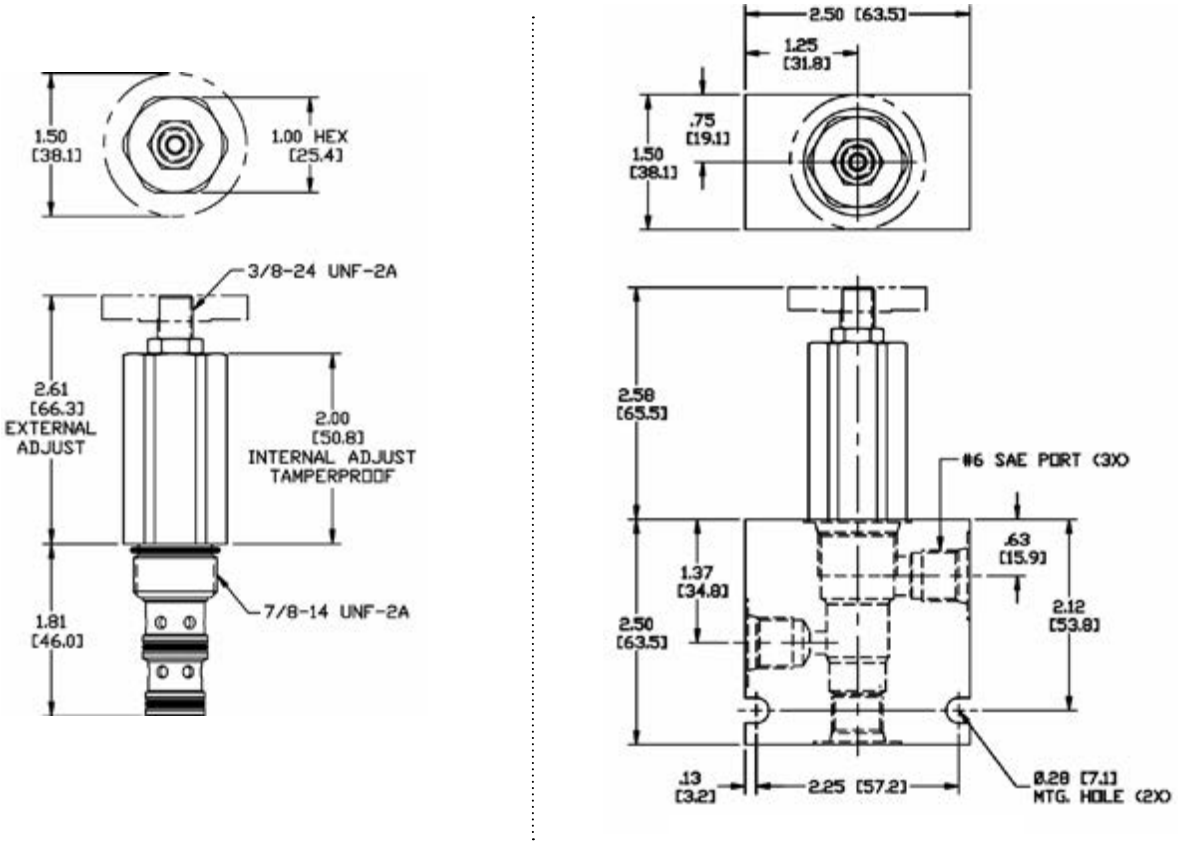


*Body Weight: .76 lbs (.35 kg)*

## ORDERING INFORMATION

**DF-PCE – ____ – ____ – ____**

**OPTIONS**

| | |
|---|---|
| Buna Standard | **00** |
| Viton Standard | **V0** |
| Buna, Knob | **0K** |
| Viton, Knob | **VK** |
| Buna, Internal Adjust | **0I** |
| Viton, Internal Adjust | **VI** |
| Buna, Tamper Proof | **0T** |
| Viton, Tamper Proof | **VT** |

**PRESSURE RANGE**

**0300** 100 - 300 PSI

Differential Pressure Across
External Controlling Orifice

**Tamper Proof**
Fill in 4 Digit Pressure Setting
Example: 0200 - 200 PSI

**BODIES**

| | |
|---|---|
| **Blank** | Without Body |
| **N** | 1/4" NPTF Ports |
| **S** | #6 SAE Ports |

**WARNING:** *the specifications/application data shown in our catalogs and data sheets are intended only as a general guide for the product described (herein). Any specific application should not be undertaken without independent study, evaluation, and testing for suitability.*



Via Malavolti, 36 - 41122 Modena - ITALY - Phone +39 (059) 254895 - Fax +39 (059) 253512 - mail: tecnord@tecnord.com - **www.tecnord.com**

## SL-PCE ADJUSTABLE PRESSURE COMPENSATING REGULATOR VALVE

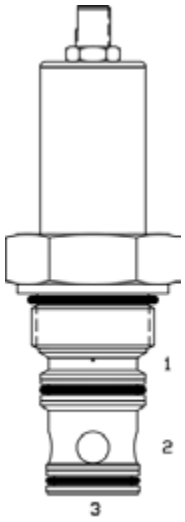


### DESCRIPTION

16 size, 1 5/16-12 thread, “Super” series, pressure compensating regulator valve.

### OPERATION

The SL-PCE with an external orifice in parallel with ports (3) and (1) maintains a constant flow rate across the external orifice, regardless of load pressure changes in the system upstream of (3), or in the bypass leg at (2) as long as pressure at (2) is less than (1). The valve’s spool maintains a constant differential pressure across the external orifice, thereby regulating the hydraulic flow rate across the external orifice (see options table for pressure ranges). When used with an orifice as described above, it functions as a priority type regulator, delivering pump flow first to the external orifice, then bypassing excess to (2). All ports may be fully pressurized.

### FEATURES

- Hardened parts for long life.
- Industry common cavity.

### HYDRAULIC SYMBOL

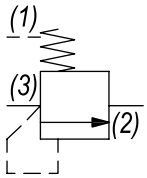


*Can be used as an adjustable logic element. Great as an adjustable pressure setting regulation device in brake, transmission & cooling systems. Because the spring chamber is separately drained, the outlet flow can be used for lower pressure functions. For fixed version see SL-PCA-oP. For higher spring differential pressure ranges consult factory.*

### PERFORMANCE

Actual Test Data (Cartridge Only)

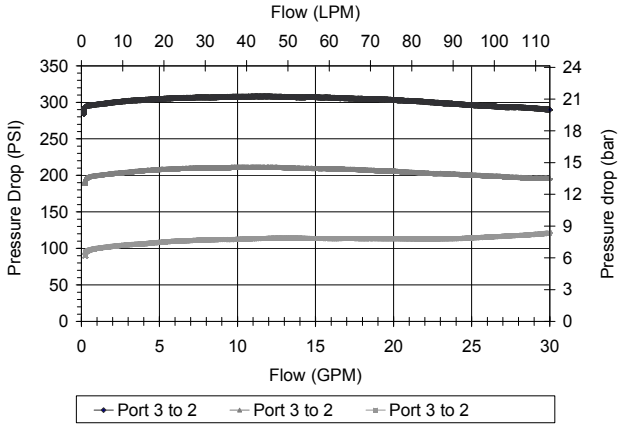


### VALVE SPECIFICATIONS

| | |
|---|---|
| Nominal Flow | 40 GPM (151 LPM) |
| Rated Operating Pressure | 3500 PSI (241 bar) |
| Seat Ratio | Area of Pilot is equal to the area at Port (3) |
| Viscosity Range | 36 to 3000 SSU (3 to 647 cSt) |
| Filtration | ISO 18/16/13 |
| Media Operating Temp. Range | -40° to 250°F (-40° to 120°C) |
| Weight | 1.15 lbs (.52 kg) |
| Operating Fluid Media | General Purpose Hydraulic Fluid |
| Cartridge Torque Requirements | 90 ft-lbs (122 Nm) |
| Cavity | SUPER 3WS |
| Cavity Form Tool (Finishing) | 40500021 |
| Seal Kit | 21191406 |

**WARNING:** *the specifications/application data shown in our catalogs and data sheets are intended only as a general guide for the product described (herein). Any specific application should not be undertaken without independent study, evaluation, and testing for suitability.*



Via Malavolti, 36 - 41122 Modena - ITALY - Phone +39 (059) 254895 - Fax +39 (059) 253512 - mail: tecnord@tecnord.com - **www.tecnord.com**

## DIMENSIONS

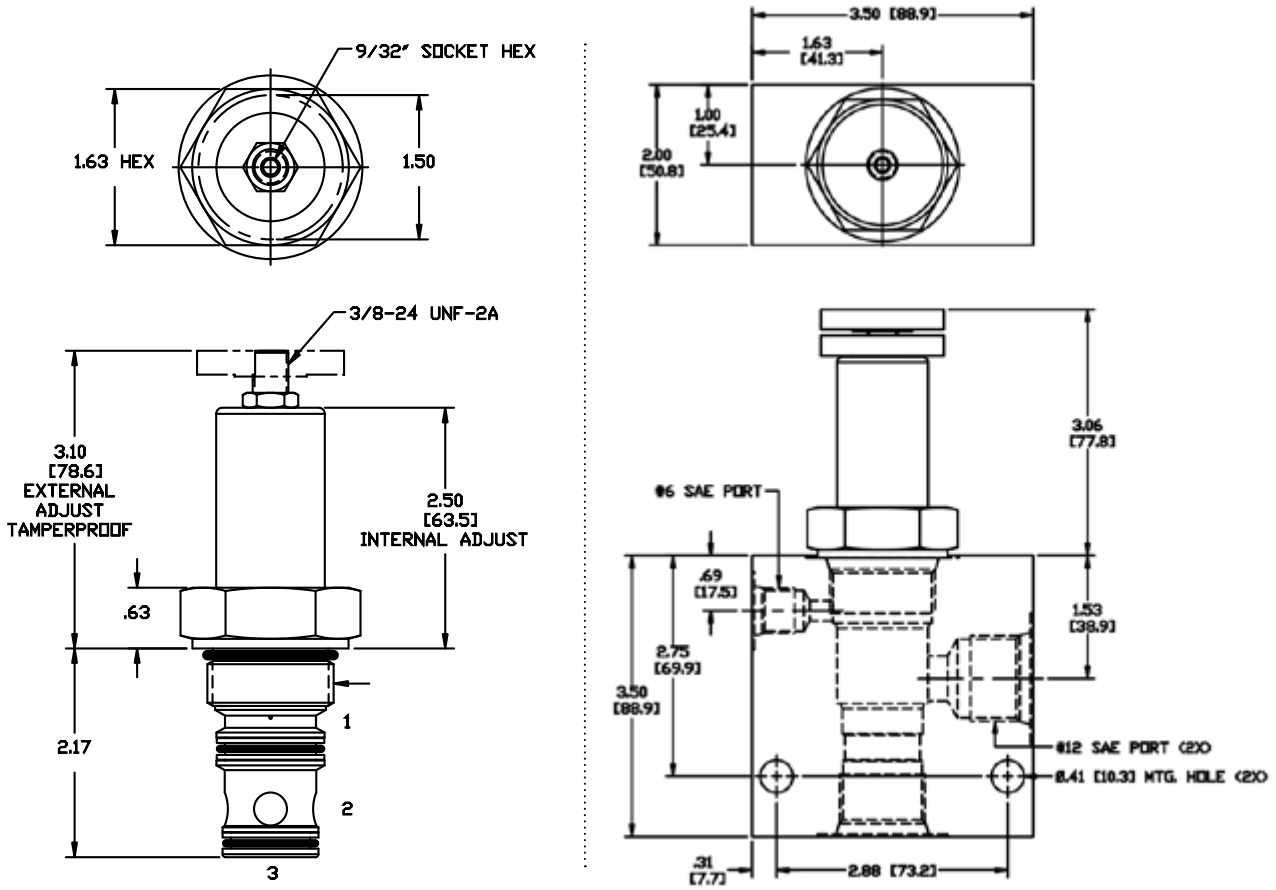


*Body Weight: 1.89 lbs (.86 kg)*

## ORDERING INFORMATION

**SL-PCE – ____ – ____ – ____**

**OPTIONS**

| | |
|---|---|
| Buna Standard | **00** |
| Viton Standard | **V0** |
| Buna, Knob | **0K** |
| Viton, Knob | **VK** |
| Buna, Internal Adjust | **0I** |
| Viton, Internal Adjust | **VI** |
| Buna, Tamper Proof | **0T** |
| Viton, Tamper Proof | **VT** |

**PRESSURE RANGE/SETTING**

**0300** 50 - 300 PSI

**Tamper Proof**
Fill in 4 Digit Pressure Setting
Example: 0200 - 200 PSI

**BODIES**

| | |
|---|---|
| **Blank** | Without Body |
| **S** | #12 SAE Ports |

**WARNING:** *the specifications/application data shown in our catalogs and data sheets are intended only as a general guide for the product described (herein). Any specific application should not be undertaken without independent study, evaluation, and testing for suitability.*



Via Malavolti, 36 - 41122 Modena - ITALY - Phone +39 (059) 254895 - Fax +39 (059) 253512 - mail: tecnord@tecnord.com - **www.tecnord.com**

## DF-PCS PRESSURE COMPENSATING VALVE, RESTRICTIVE TYPE

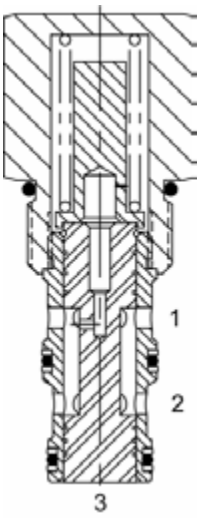


### DESCRIPTION

10 size, 7/8-14 thread, “Delta” series, pressure compensating valve, restrictive type.

### OPERATION

The DF-PCS allows pressure compensated flow from (1) to (2) regulated by the pressure present at (3). The spring chamber is constantly vented at (1).

### FEATURES

- Hardened parts for long life.
- Industry common cavity.

### HYDRAULIC SYMBOL

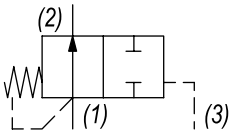


*Pressure compensator for flow control, typically used with an external orifice inline with port (1). Port (3) should sense upstream pressure of orifice.*

### PERFORMANCE

Actual Test Data (Cartridge Only)

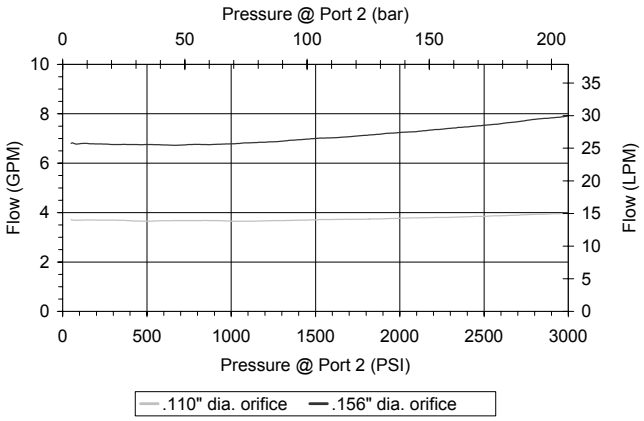


### VALVE SPECIFICATIONS

| | |
|---|---|
| Nominal Flow | 10 GPM (38 LPM) |
| Rated Operating Pressure | 3500 PSI (241 bar) |
| Typical Internal Leakage (150 SSU) | 5 cu in/min (82 ml/min) per path |
| Viscosity Range | 36 to 3000 SSU (3 to 647 cSt) |
| Filtration | ISO 18/16/13 |
| Media Operating Temp. Range | -40° to 250°F (-40° to 120°C) |
| Weight | .35 lbs (.16 kg) |
| Operating Fluid Media | General Purpose Hydraulic Fluid |
| Cartridge Torque Requirements | 30 ft-lbs (40.6 Nm) |
| Cavity | DELTA 3W |
| Cavity Form Tool (Finishing) | 40500001 |
| Seal Kit | 21191210 |

**WARNING:** *the specifications/application data shown in our catalogs and data sheets are intended only as a general guide for the product described (herein). Any specific application should not be undertaken without independent study, evaluation, and testing for suitability.*



Via Malavolti, 36 - 41122 Modena - ITALY - Phone +39 (059) 254895 - Fax +39 (059) 253512 - mail: tecnord@tecnord.com - **www.tecnord.com**

## DIMENSIONS

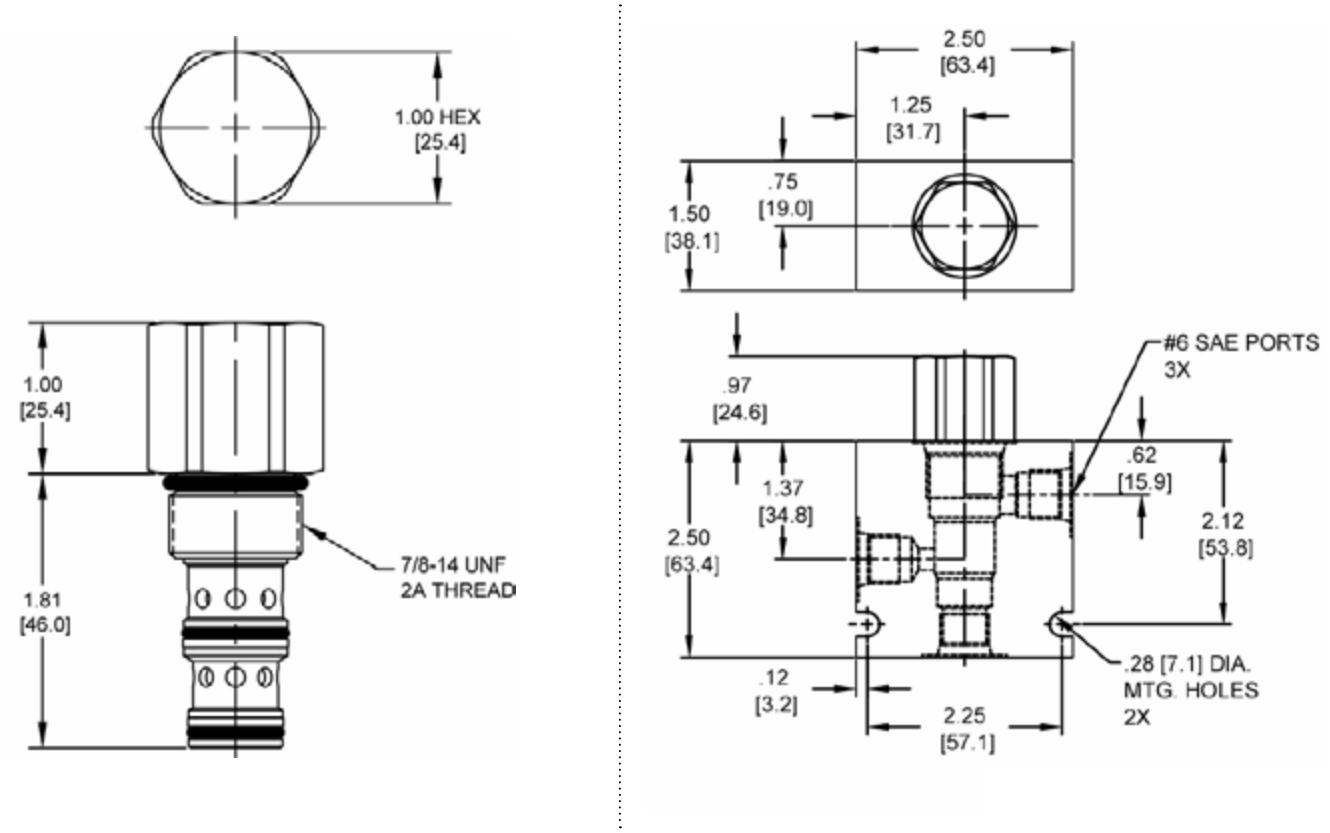


*Body Weight: .76 lbs (.35 kg)*

## ORDERING INFORMATION

**DF-PCS – ____ – ____ – ____**

**OPTIONS**

| | |
|---|---|
| Buna Standard | **00** |
| Viton Standard | **V0** |

**PRESSURE DIFFERENTIAL**

| | |
|---|---|
| **0150** | 150 PSI |
| **0450** | 450 PSI |

Differential Pressure Across
External Controlling Orifice

**BODIES**

| | |
|---|---|
| **Blank** | Without Body |
| **N** | 1/4" NPTF Ports |
| **S** | #6 SAE Ports |

**WARNING:** *the specifications/application data shown in our catalogs and data sheets are intended only as a general guide for the product described (herein). Any specific application should not be undertaken without independent study, evaluation, and testing for suitability.*



Via Malavolti, 36 - 41122 Modena - ITALY - Phone +39 (059) 254895 - Fax +39 (059) 253512 - mail: tecnord@tecnord.com - **www.tecnord.com**

## DF-TCS PRESSURE COMPENSATING VALVE, RESTRICTIVE TYPE

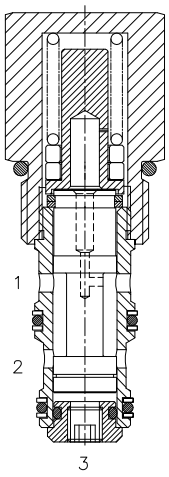


### DESCRIPTION

10 size, 7/8-14 thread, “Delta” series, pressure compensating valve, restrictive type.

### OPERATION

The DF-TCS allows pressure compensated flow from (1) to (2) regulated the pressure present at (3). Pressure differential between (1) and (3) is fixed at 8/24 bar (according to the pressure settings). These are minimum values increasing with the flow because of the pressure drop through the valve (see graph).

### FEATURES

- Hardened parts for long life.
- Industry common cavity.

*Pressure compensator for 2 way flow control, typically used with an external orifice inline with port (3). Port (1) should sense upstream pressure of orifice.*

### HYDRAULIC SYMBOL

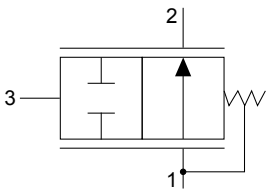


### PERFORMANCE

Actual Test Data (Cartridge Only)

### VALVE SPECIFICATIONS

| | |
|---|---|
| Nominal Flow | 10 GPM (38 LPM) |
| Rated Operating Pressure | 3500 PSI (241 bar) |
| Typical Internal Leakage (150 SSU) | 35 ml/min @ 250 bar |
| Viscosity Range | 36 to 3000 SSU (3 to 647 cSt) |
| Filtration | ISO 18/16/13 |
| Media Operating Temp. Range | -40° to 250°F (-40° to 120°C) |
| Weight | .35 lbs (.16 kg) |
| Operating Fluid Media | General Purpose Hydraulic Fluid |
| Cartridge Torque Requirements | 33 ft-lbs (45 Nm) |
| Cavity | DELTA 3W |
| Cavity Tools Kit (form tool, reamer, tap) | 40500001 |
| Seal Kit | 210902026 |

**Pressure Drop (bar) vs. Flow (lt/min)**

*For various pressure compensator settings (bar)*

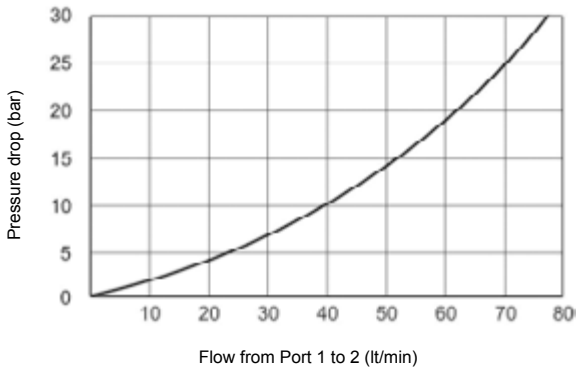


**DF-TCS 008 - Flow (lt/min) vs. inlet pressure (bar)**

*For various orifice diameters (mm)*

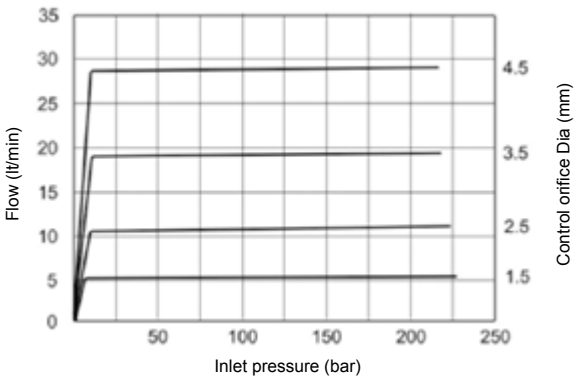


**WARNING:** *the specifications/application data shown in our catalogs and data sheets are intended only as a general guide for the product described (herein). Any specific application should not be undertaken without independent study, evaluation, and testing for suitability.*

## DIMENSIONS

**DF-TCS 024 - Flow (lt/min) vs. inlet pressure (bar)**

*For various orifice diameters (mm)*

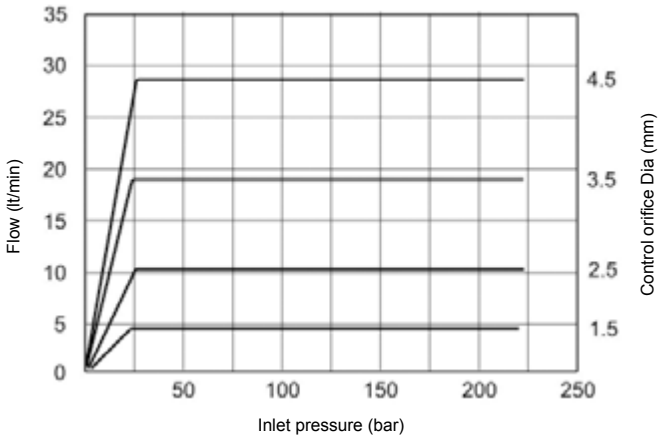


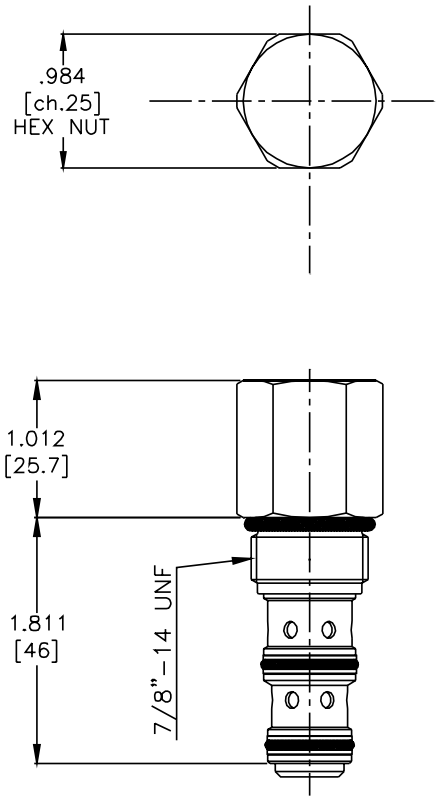


*(for bodies style and sizes see section "Accessories")*

## ORDERING INFORMATION

**DF-TCS – ____ – ____ – ____**

**OPTIONS**

| | |
|---|---|
| Buna Standard | **00** |
| Viton Standard | **V0** |

**PRESSURE SETTINGS**

| | |
|---|---|
| **008** | 8 bar (115 PSI) |
| **024** | 24 bar (340 PSI) |

Differential Pressure Across
External Controlling Orifice

**BODIES**

| | |
|---|---|
| **Blank** | Without Body |
| **N** | 3/8" BSP Ports |
| **S** | #6 SAE Ports |

**WARNING:** *the specifications/application data shown in our catalogs and data sheets are intended only as a general guide for the product described (herein). Any specific application should not be undertaken without independent study, evaluation, and testing for suitability.*



Via Malavolti, 36 - 41122 Modena - ITALY - Phone +39 (059) 254895 - Fax +39 (059) 253512 - mail: tecnord@tecnord.com - **www.tecnord.com**

## DF-PCT ADJUSTABLE PRESSURE COMPENSATING VALVE, RESTRICTIVE TYPE

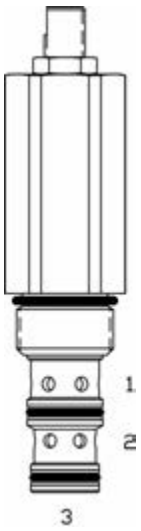


### DESCRIPTION

10 size, 7/8-14 thread, “Delta” series, pressure compensating valve, restrictive type.

### OPERATION

The DF-PCT with an external orifice in front of port (1) allows pressure compensated flow from (1) to (2), regulated by the pressure present at (3). The spring chamber is constantly vented at (1).

### FEATURES

- Hardened parts for long life.
- Industry common cavity.

### HYDRAULIC SYMBOL

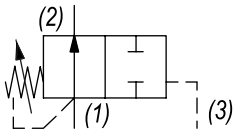


*Can be used as an adjustable logic element. For fixed version see DF-PCS. For higher spring differential pressure ranges consult factory.*

### PERFORMANCE

Actual Test Data (Cartridge Only)

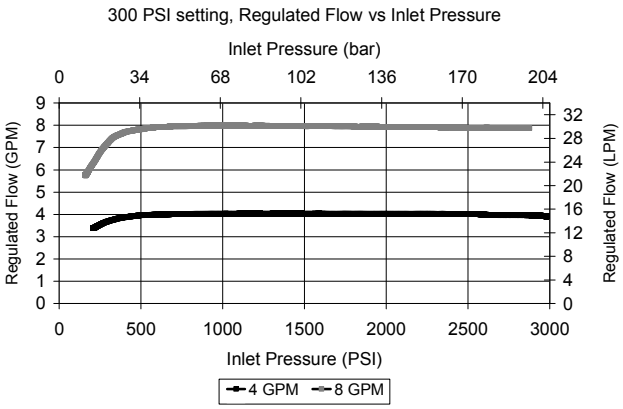


### VALVE SPECIFICATIONS

| | |
|---|---|
| Nominal Flow | 10 GPM (38 LPM) |
| Rated Operating Pressure | 3500 PSI (241 bar) |
| Typical Internal Leakage (150 SSU) | 5 cu in/min (82 ml/min) per path |
| Viscosity Range | 36 to 3000 SSU (3 to 647 cSt) |
| Filtration | ISO 18/16/13 |
| Media Operating Temp. Range | -40° to 250°F (-40° to 120°C) |
| Weight | .60 lbs (.27 kg) |
| Operating Fluid Media | General Purpose Hydraulic Fluid |
| Cartridge Torque Requirements | 30 ft-lbs (40.6 Nm) |
| Cavity | DELTA 3W |
| Cavity Form Tool (Finishing) | 40500001 |
| Seal Kit | 21191210 |

**WARNING:** *the specifications/application data shown in our catalogs and data sheets are intended only as a general guide for the product described (herein). Any specific application should not be undertaken without independent study, evaluation, and testing for suitability.*



Via Malavolti, 36 - 41122 Modena - ITALY - Phone +39 (059) 254895 - Fax +39 (059) 253512 - mail: tecnord@tecnord.com - **www.tecnord.com**

## DIMENSIONS

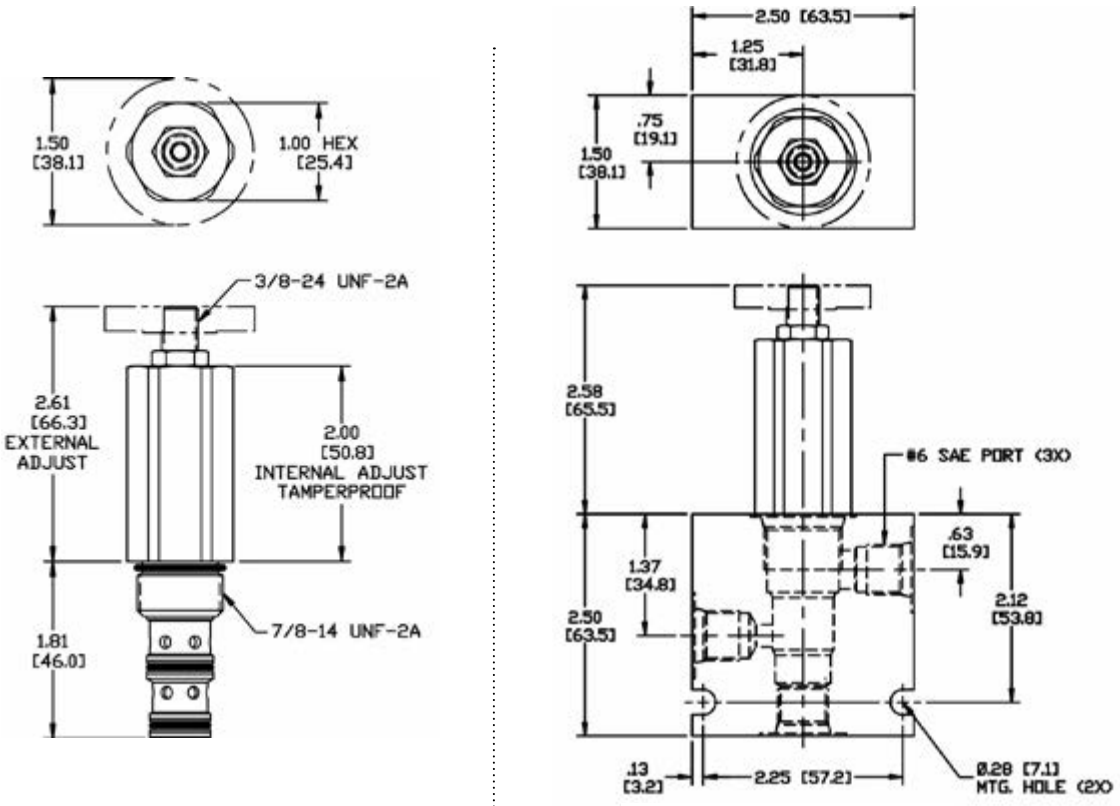


*Body Weight: .76 lbs (.35 kg)*

## ORDERING INFORMATION

**DF-PCT – ____ – ____ – ____**

**OPTIONS**

| | |
|---|---|
| Buna Standard | **00** |
| Viton Standard | **V0** |
| Buna, Knob | **0K** |
| Viton, Knob | **VK** |
| Buna, Internal Adjust | **0I** |
| Viton, Internal Adjust | **VI** |
| Buna, Tamper Proof | **0T** |
| Viton, Tamper Proof | **VT** |

**PRESSURE RANGE**

**0300** 50 - 300 PSI

Differential Pressure Across
External Controlling Orifice

**Tamper Proof**
Fill in 4 Digit Pressure Setting
Example: 0200 - 200 PSI

**BODIES**

| | |
|---|---|
| **Blank** | Without Body |
| **N** | 1/4" NPTF Ports |
| **S** | #6 SAE Ports |

**WARNING:** *the specifications/application data shown in our catalogs and data sheets are intended only as a general guide for the product described (herein). Any specific application should not be undertaken without independent study, evaluation, and testing for suitability.*



Via Malavolti, 36 - 41122 Modena - ITALY - Phone +39 (059) 254895 - Fax +39 (059) 253512 - mail: tecnord@tecnord.com - **www.tecnord.com**

**WARNING:** *the specifications/application data shown in our catalogs and data sheets are intended only as a general guide for the product described (herein). Any specific application should not be undertaken without independent study, evaluation, and testing for suitability.*



Via Malavolti, 36 - 41122 Modena - ITALY - Phone +39 (059) 254895 - Fax +39 (059) 253512 - mail: tecnord@tecnord.com - **www.tecnord.com**

## PRESSURE REDUCING/RELIEVING VALVES

| | GPM | PSI | LPM | BAR | CAVITY | MODEL | PAGE |
|---|---|---|---|---|---|---|---|
| 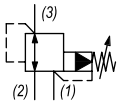  | 10 | 3000 | 38 | 207 | 7/8-14 | **DF-PRP** | MP88 |
| | 20 | 3000 | 76 | 207 | 1 5/16-12 | **SK-PRP** | MP90 |
| | 10 | 4000 | 38 | 276 | 7/8-14 | **DF-PWP** | MP92 |

## TYPICAL SCHEMATIC

Typical application for the PRP and PWP is multi-system pressure setting. System relief pressure must be greater then reduce pressure setting.

W 50/ 2022

**WARNING:** *the specifications/application data shown in our catalogs and data sheets are intended only as a general guide for the product described (herein). Any specific application should not be undertaken without independent study, evaluation, and testing for suitability.*

## DF-PRP PILOT OPERATED, PRESSURE REDUCING, RELIEVING VALVE

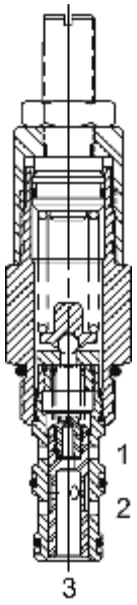


### DESCRIPTION

10 size, 7/8-14 thread, “Delta” series, pilot operated, pressure reducing, relieving valve.

### OPERATION

The DF-PRP in its steady state, allows flow to pass from (2) to (3), with the spring chamber constantly drained at (1). When a pre-determined pressure is reached at (3), the spool shifts to restrict input flow at (2), thereby reducing (restricting) flow. If valve and pressure at port (3) exceeds setting, spool shift to open passage at port (1), thereby regulating pressure at port (3) by relieving excess flow. The cartridge offers smooth transition in response to load changes in common hydraulic circuits.

### FEATURES

- Hardened parts for long life.
- Industry common cavity.

### HYDRAULIC SYMBOL

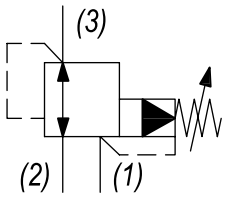


### VALVE SPECIFICATIONS

| | |
|---|---|
| Nominal Flow | 10 GPM (38 LPM) |
| Rated Operating Pressure | 3000 PSI (207 bar) |
| Viscosity Range | 36 to 3000 SSU (3 to 647 cSt) |
| Filtration | ISO 18/16/13 |
| Media Operating Temp. Range | -40° to 250°F (-40° to 120°C) |
| Weight | .59 lbs (.27 kg) |
| Operating Fluid Media | General Purpose Hydraulic Fluid |
| Cartridge Torque Requirements | 30 ft-lbs (40.6 Nm) |
| Cavity | DELTA 3W |
| Cavity Form Tool (Finishing) | 40500001 |
| Seal Kit | 21191206 |

### PERFORMANCE

Actual Test Data (Cartridge Only)

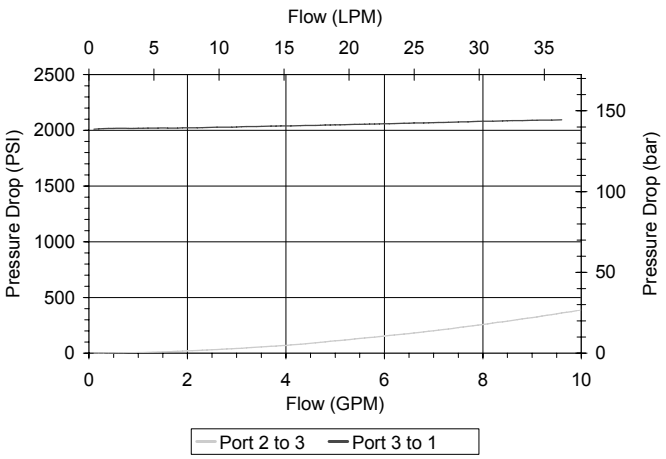


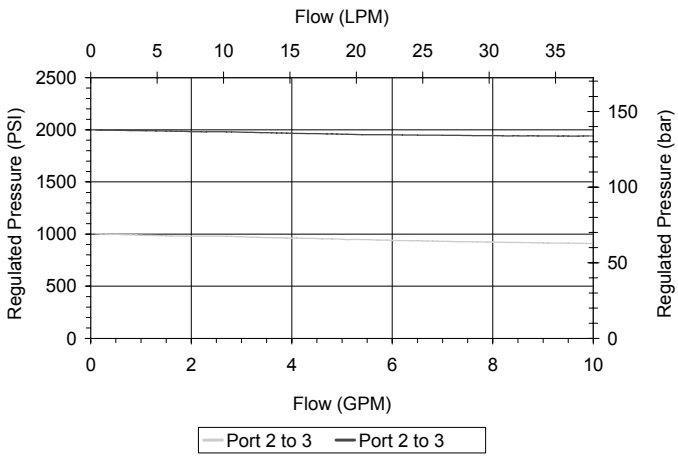


**WARNING:** *the specifications/application data shown in our catalogs and data sheets are intended only as a general guide for the product described (herein). Any specific application should not be undertaken without independent study, evaluation, and testing for suitability.*



Via Malavolti, 36 - 41122 Modena - ITALY - Phone +39 (059) 254895 - Fax +39 (059) 253512 - mail: tecnord@tecnord.com - **www.tecnord.com**

## DIMENSIONS

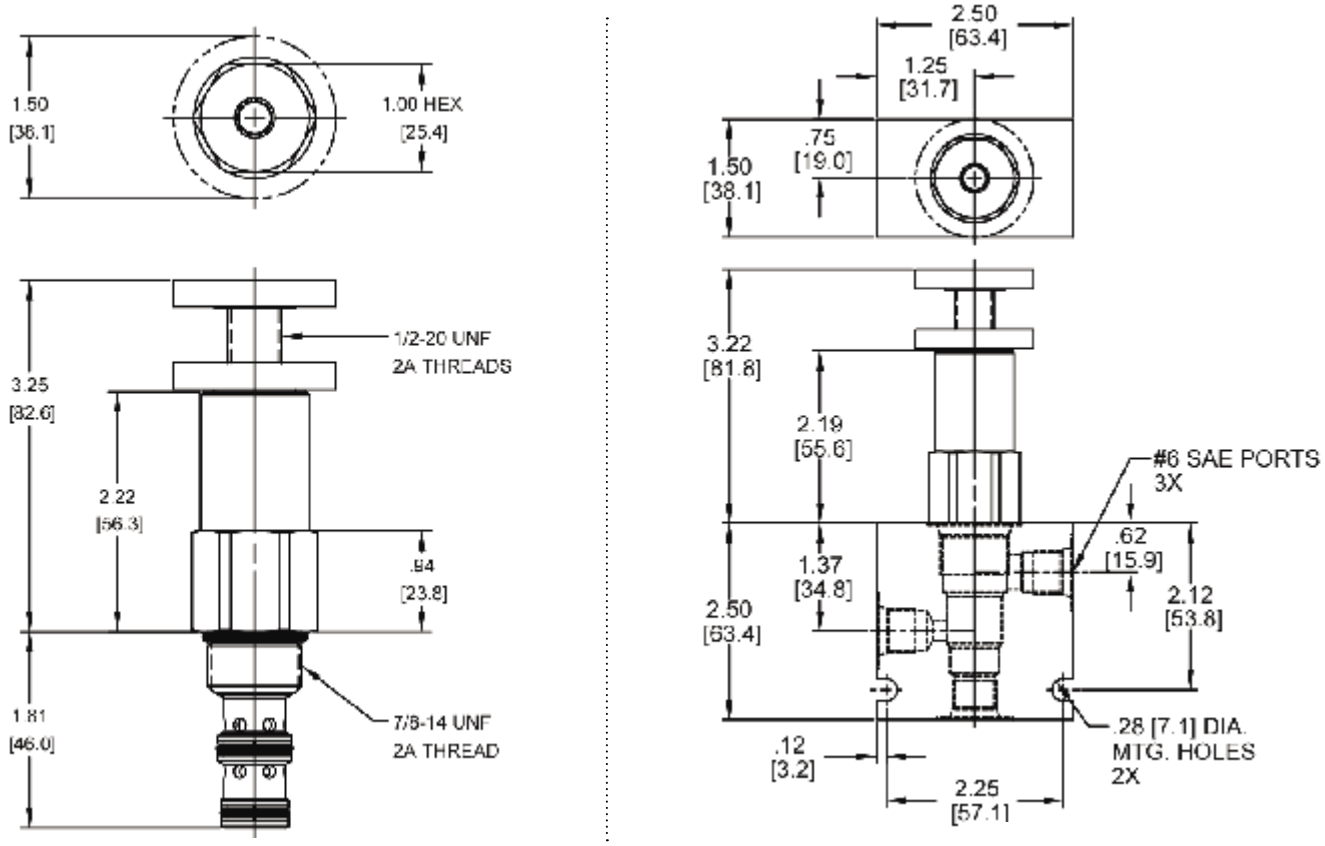


*Body Weight: .76 lbs (.35 kg)*

## ORDERING INFORMATION

**DF-PRP – ____ – ____ – ____**

**OPTIONS**

| | |
|---|---|
| Buna Standard | **00** |
| Viton Standard | **V0** |
| Buna, Knob | **0K** |
| Viton, Knob | **VK** |

**PRESSURE RANGE**

| | |
|---|---|
| **3000** | 100 - 3000 PSI |

**BODIES**

| | |
|---|---|
| **Blank** | Without Body |
| **N** | 1/4" NPTF Ports |
| **S** | #6 SAE Ports |

**WARNING:** *the specifications/application data shown in our catalogs and data sheets are intended only as a general guide for the product described (herein). Any specific application should not be undertaken without independent study, evaluation, and testing for suitability.*



Via Malavolti, 36 - 41122 Modena - ITALY - Phone +39 (059) 254895 - Fax +39 (059) 253512 - mail: tecnord@tecnord.com - **www.tecnord.com**

## SK-PRP PILOT OPERATED PRESSURE REDUCING, RELIEVING VALVE

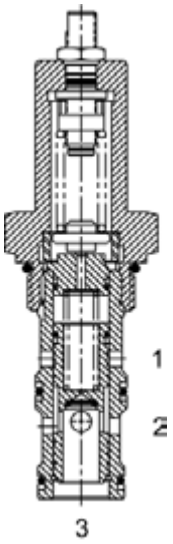


### DESCRIPTION

16 size, 1 5/16-12 thread, “Super” series, pilot operated pressure reducing, relieving valve.

### OPERATION

The SK-PRP in its steady state, allows flow to pass from (2) to (3), with the spring chamber constantly drained at (1). When a pre-determined pressure is reached at (3), the spool shifts to restrict input flow at (2), thereby reducing (restricting) flow. If the valve and pressure at port (3) exceeds setting, spool shifts to open passage at port (1), thereby regulating pressure at (3) by relieving excess flow. The cartridge offers smooth transition in response to load changes in common hydraulic circuits.

### FEATURES

- Hardened parts for long life.
- Industry common cavity.

### HYDRAULIC SYMBOL

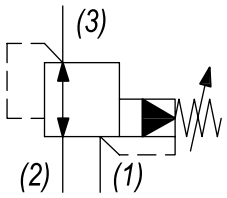


### PERFORMANCE

Actual Test Data (Cartridge Only)

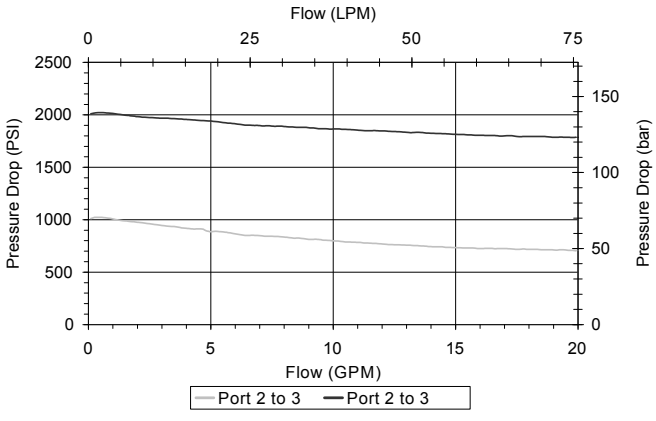


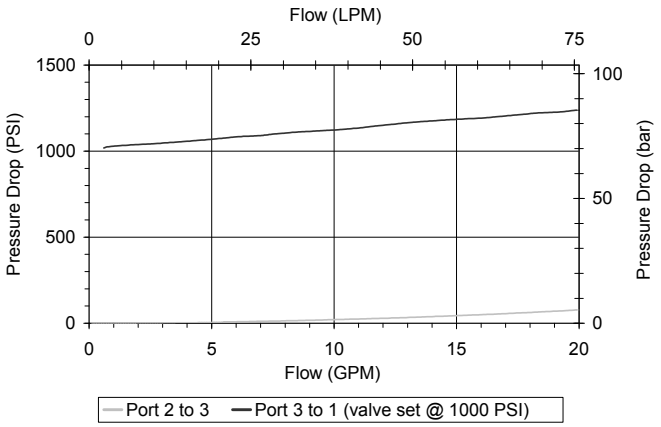


### VALVE SPECIFICATIONS

| | |
|---|---|
| Nominal Flow | 20 GPM (76 LPM) |
| Rated Operating Pressure | 500-3000 PSI (34-207 bar) |
| Viscosity Range | 36 to 3000 SSU (3 to 647 cSt) |
| Filtration | ISO 18/16/13 |
| Media Operating Temp. Range | -40° to 250°F (-40° to 120°C) |
| Weight | 1.28 lbs (.58 kg) |
| Operating Fluid Media | General Purpose Hydraulic Fluid |
| Cartridge Torque Requirements | 90 ft-lbs (122 Nm) |
| Cavity | SUPER 3W |
| Cavity Form Tool (Finishing) | 40500018 |
| Seal Kit | 21191406 |

**WARNING:** *the specifications/application data shown in our catalogs and data sheets are intended only as a general guide for the product described (herein). Any specific application should not be undertaken without independent study, evaluation, and testing for suitability.*



Via Malavolti, 36 - 41122 Modena - ITALY - Phone +39 (059) 254895 - Fax +39 (059) 253512 - mail: tecnord@tecnord.com - **www.tecnord.com**

## DIMENSIONS

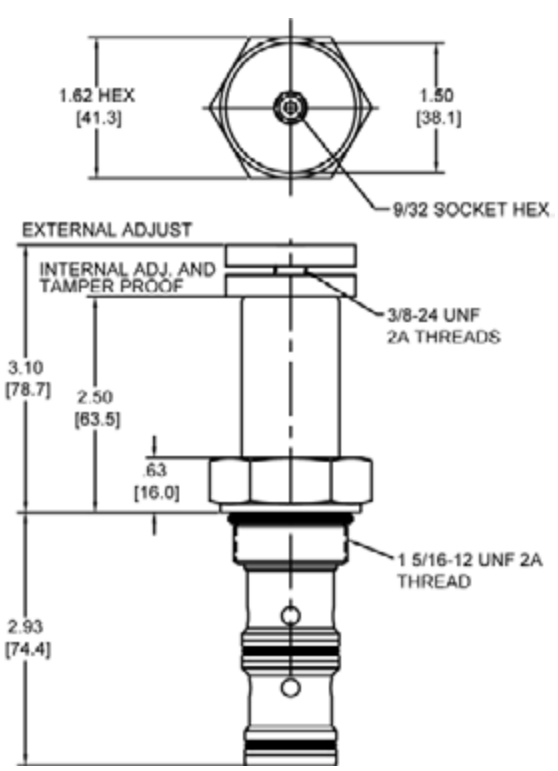


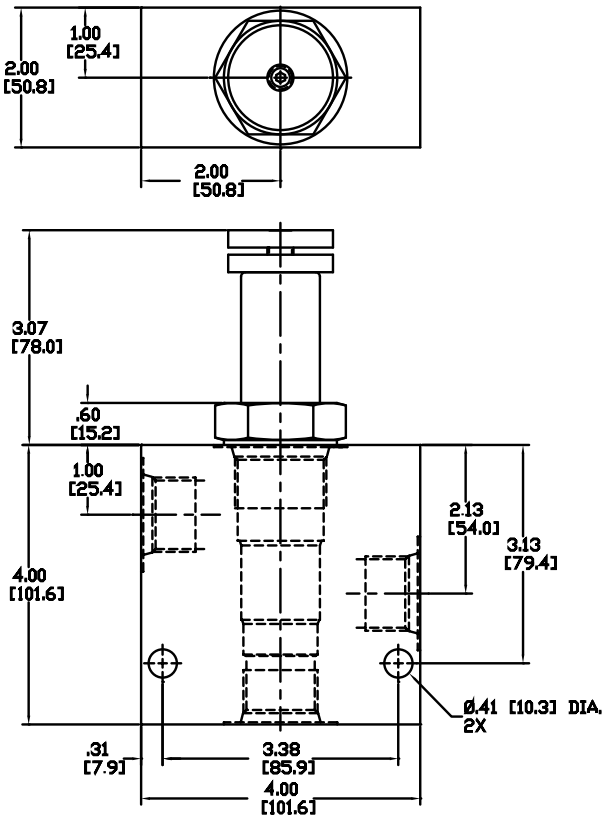


*Body Weight: 2.46 lbs (1.11 kg)*

## ORDERING INFORMATION

**SK-PRP** – _____ – _____ – _____

**OPTIONS**

| | |
|---|---|
| Buna Standard | **00** |
| Viton Standard | **V0** |
| Buna, Knob | **0K** |
| Viton, Knob | **VK** |
| Buna, Internal Adjust | **0I** |
| Viton, Internal Adjust | **VI** |
| Buna, Tamper Proof | **0T** |
| Viton, Tamper Proof | **VT** |

**PRESSURE RANGE/SETTING**

**Ext./Int. Adjustable**

**3000** 500 - 3000 PSI

**Tamper Proof**
Fill in 4 Digit Pressure Setting
Example: 0500 - 500 PSI

**BODIES**

| | |
|---|---|
| **Blank** | Without Body |
| **S** | #12 SAE Ports |

**WARNING:** *the specifications/application data shown in our catalogs and data sheets are intended only as a general guide for the product described (herein). Any specific application should not be undertaken without independent study, evaluation, and testing for suitability.*



Via Malavolti, 36 - 41122 Modena - ITALY - Phone +39 (059) 254895 - Fax +39 (059) 253512 - mail: tecnord@tecnord.com - **www.tecnord.com**

## DF-PWP PILOT OPERATED PRESSURE REDUCING, RELIEVING VALVE

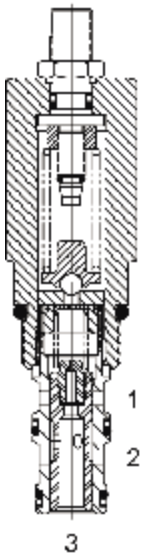


### DESCRIPTION

10 size, 7/8-14 thread, “Delta” series, pilot operated pressure reducing, relieving valve.

### OPERATION

The DF-PWP in its steady state, allows flow to pass from (2) to (3), with the spring chamber constantly drained at (1). When a pre-determined pressure is reached at (3), the spool shifts to restrict input flow at (2), thereby reducing (restricting) flow. If valve and pressure at port (3) exceeds setting, spool shifts to open passage at port (1), thereby regulating pressure at port (3) by relieving excess flow. The cartridge offers smooth transition in response to load changes in common hydraulic circuits.

### FEATURES

- Hardened parts for long life.
- Industry common cavity.

### HYDRAULIC SYMBOL

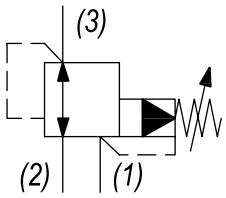


### VALVE SPECIFICATIONS

| | |
|---|---|
| Nominal Flow | 10 GPM (38 LPM) |
| Rated Operating Pressure | 4000 PSI (276 bar) |
| Viscosity Range | 36 to 3000 SSU (3 to 647 cSt) |
| Filtration | ISO 18/16/13 |
| Media Operating Temp. Range | -40° to 250°F (-40° to 120°C) |
| Weight | .57 lbs (.26 kg) |
| Operating Fluid Media | General Purpose Hydraulic Fluid |
| Cartridge Torque Requirements | 30 ft-lbs (40.6 Nm) |
| Cavity | DELTA 3W |
| Cavity Form Tool (Finishing) | 40500001 |
| Seal Kit | 21191206 |

### PERFORMANCE

Actual Test Data (Cartridge Only)

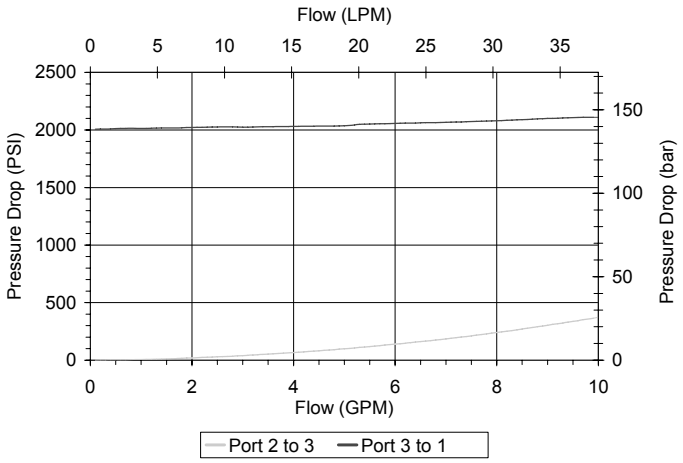


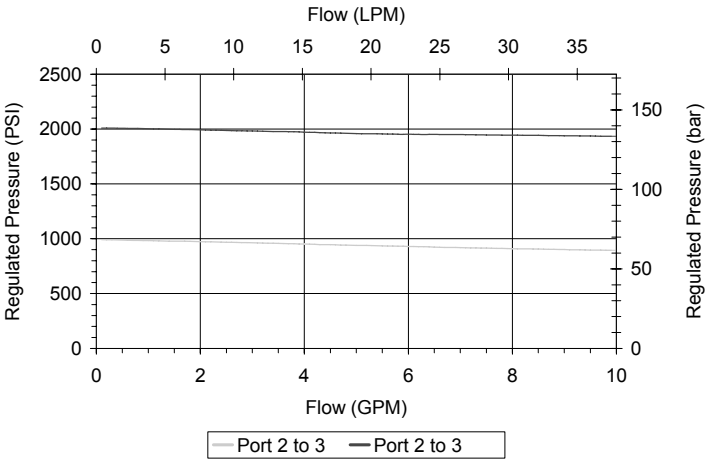


**WARNING:** *the specifications/application data shown in our catalogs and data sheets are intended only as a general guide for the product described (herein). Any specific application should not be undertaken without independent study, evaluation, and testing for suitability.*



Via Malavolti, 36 - 41122 Modena - ITALY - Phone +39 (059) 254895 - Fax +39 (059) 253512 - mail: tecnord@tecnord.com - **www.tecnord.com**

## DIMENSIONS

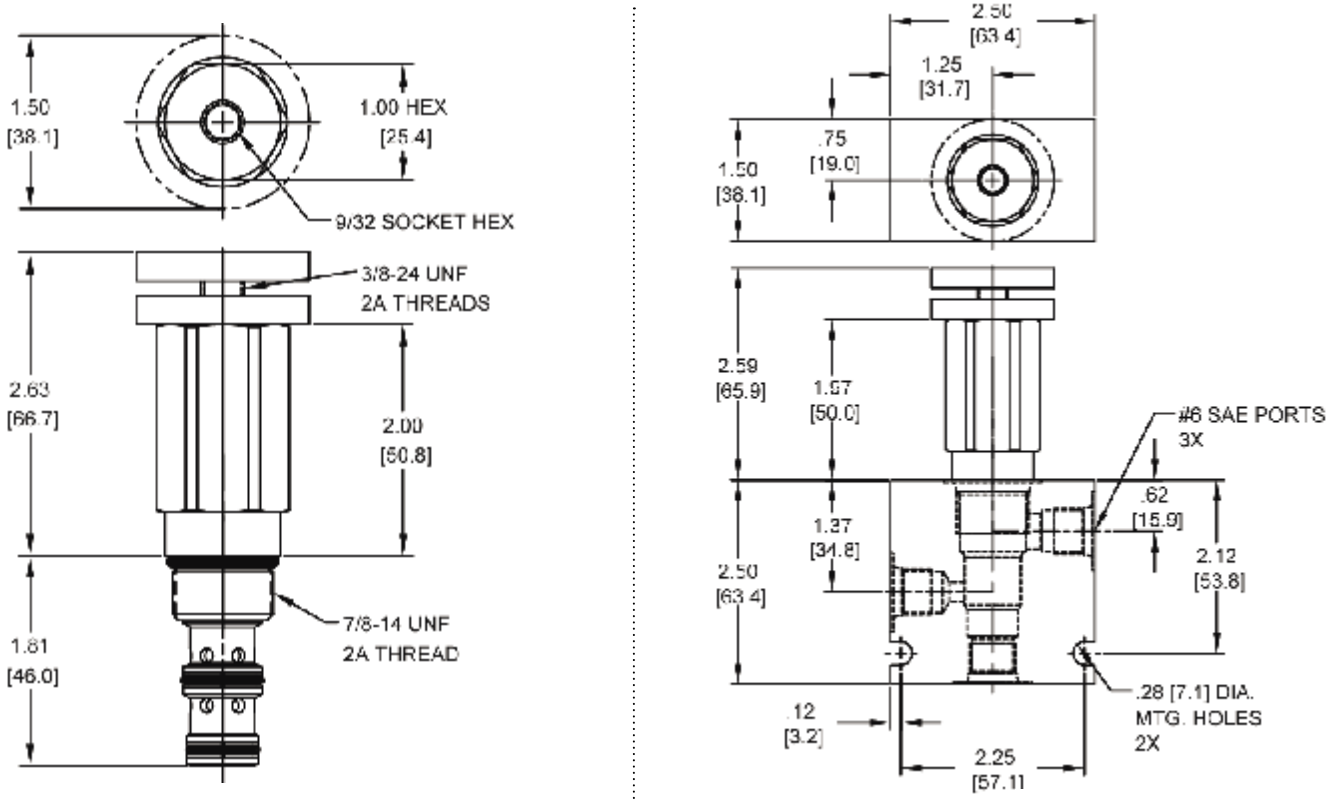


*Body Weight: .76 lbs (.35 kg)*

## ORDERING INFORMATION

**DF-PWP – ____ – ____ – ____**

**OPTIONS**

| | |
|---|---|
| Buna Standard | **00** |
| Viton Standard | **V0** |
| Buna, Knob | **0K** |
| Viton, Knob | **VK** |
| Buna, Internal Adjust | **0I** |
| Viton, Internal Adjust | **VI** |
| Buna, Tamper Proof | **0T** |
| Viton, Tamper Proof | **VT** |

**PRESSURE RANGE/SETTING**

**Ext./Int. Adjustable**

**4000** 100 - 4000 PSI

**Tamper Proof**
Fill in 4 Digit Pressure Setting
Example: 0500 - 500 PSI

**BODIES**

| | |
|---|---|
| **Blank** | Without Body |
| **N** | 1/4" NPTF Ports |
| **S** | #6 SAE Ports |

**WARNING:** *the specifications/application data shown in our catalogs and data sheets are intended only as a general guide for the product described (herein). Any specific application should not be undertaken without independent study, evaluation, and testing for suitability.*



Via Malavolti, 36 - 41122 Modena - ITALY - Phone +39 (059) 254895 - Fax +39 (059) 253512 - mail: tecnord@tecnord.com - **www.tecnord.com**

**WARNING:** *the specifications/application data shown in our catalogs and data sheets are intended only as a general guide for the product described (herein). Any specific application should not be undertaken without independent study, evaluation, and testing for suitability.*



Via Malavolti, 36 - 41122 Modena - ITALY - Phone +39 (059) 254895 - Fax +39 (059) 253512 - mail: tecnord@tecnord.com - **www.tecnord.com**

## SEQUENCE VALVES

| | GPM | PSI | LPM | BAR | CAVITY | MODEL | PAGE |
|---|---|---|---|---|---|---|---|
| 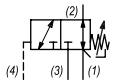 | 10 | 3000 | 38 | 207 | 7/8-14 | **DG-PSA** | MP96 |
| 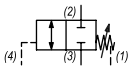 | 10 | 3000 | 38 | 207 | 7/8-14 | **DG-PSC** | MP98 |
| 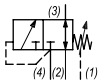 | 10 | 3000 | 38 | 207 | 7/8-14 | **DG-PSI** | MP100 |
| 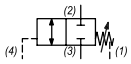 | 10 | 3000 | 38 | 207 | 7/8-14 | **DG-PSO** | MP102 |
| 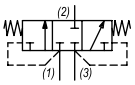 | 12 | 3000 | 45 | 207 | 7/8-14 | **DG-PSS** | MP104 |
| 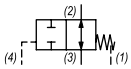 | 10 | 3000 | 38 | 207 | 7/8-14 | **DG-PTC** | MP106 |
| 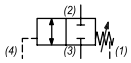 | 10 | 3000 | 38 | 207 | 7/8-14 | **DG-PTO** | MP108 |
| 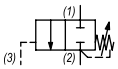 | 10 | 3000 | 38 | 207 | 7/8-14 | **DF-PWE** | MP110 |
| 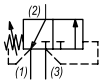 | 8 | 3000 | 30 | 207 | 7/8-14 | **DF-PWI** | MP112 |
| 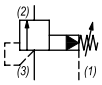 | 40 | 3500 | 151 | 241 | 1 5/16-12 | **SL-PWA** | MP114 |
| 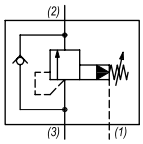 | 40 | 3500 | 151 | 241 | 1 5/16-12 | **SL-PWB** | MP116 |

## TYPICAL SCHEMATIC

Typical application for the PSO or PSC sequence valve is for a high/low application like a log splitter where the spring chamber can be vented externally (spring chamber pressure directly adds to the pilot pressure required to shift the valve). Typical application for the PWI sequence valve is for controlling the lip on a dock leveler. Typical application for the PWE sequence valve is for a high/low pump in a positive traction circuit where the valve automatically shifts to low speed high torque mode. Typical application for the PSI sequence valve is when starting against load where the spring chamber can be vented externally (spring chamber pressure directly adds to the pilot pressure required to shift the valve). Typical application for the PSA sequence valve is a hydraulic brake release of a spring loaded single acting cylinder. Typical application for the PSS hot oil shuttle is to divert fluid from the low pressure side of a closed loop hydrostatic transmission for cooling or filtering.

**WARNING:** *the specifications/application data shown in our catalogs and data sheets are intended only as a general guide for the product described (herein). Any specific application should not be undertaken without independent study, evaluation, and testing for suitability.*

## DG-PSA SEQUENCE VALVE, 4 WAY NORMALLY CLOSED, EXTERNAL PILOT

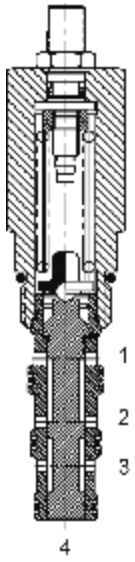


### DESCRIPTION

10 size, 7/8-14 thread, “Delta” series, 4 way external pilot sequence valve.

### OPERATION

The DG-PSA in neutral (un-piloted), allows flow between (1) and (2) bidirectionally, while blocking at (3). The spring chamber is constantly vented at (1). On attainment of a predetermined pressure at (4), the cartridge shifts to close (1) to (2), while opening (2) to (3). Note that the backpressure value at (1) must be added to the selected pressure setting to determine pilot pressure necessary to open valve.

### FEATURES

- Optional spring ranges to 1500 PSI (103 bar).
- Hardened parts for long life.
- Industry common cavity.

### HYDRAULIC SYMBOL

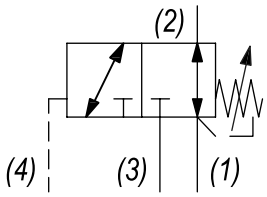


*Orifice .030 to .060 diameter recommended beneath port (4).*

### PERFORMANCE

Actual Test Data (Cartridge Only)

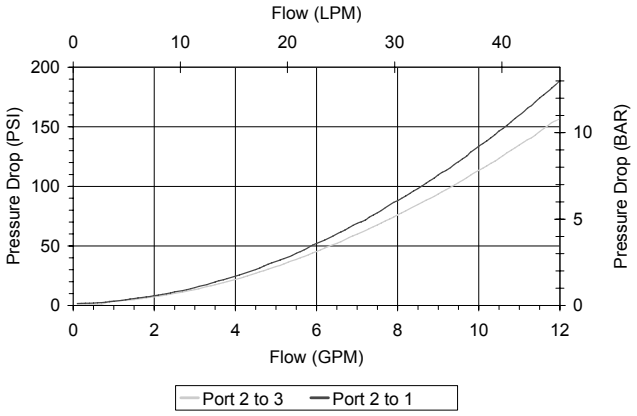


### VALVE SPECIFICATIONS

| | |
|---|---|
| Nominal Flow | 10 GPM (38 LPM) |
| Rated Operating Pressure | 3000 PSI (207 bar) |
| Typical Internal Leakage (150 SSU) | 5 cu in/min (82 ml/min) |
| Viscosity Range | 36 to 3000 SSU (3 to 647 cSt) |
| Filtration | ISO 18/16/13 |
| Media Operating Temp. Range | -40° to 250°F (-40° to 120°C) |
| Weight | .63 lbs (.28 kg) |
| Operating Fluid Media | General Purpose Hydraulic Fluid |
| Cartridge Torque Requirements | 30 ft-lbs (40.6 Nm) |
| Cavity | DELTA 4W |
| Cavity Form Tool (Finishing) | 40500002 |
| Seal Kit | 21191214 |

**WARNING:** *the specifications/application data shown in our catalogs and data sheets are intended only as a general guide for the product described (herein). Any specific application should not be undertaken without independent study, evaluation, and testing for suitability.*



Via Malavolti, 36 - 41122 Modena - ITALY - Phone +39 (059) 254895 - Fax +39 (059) 253512 - mail: tecnord@tecnord.com - **www.tecnord.com**

## DIMENSIONS

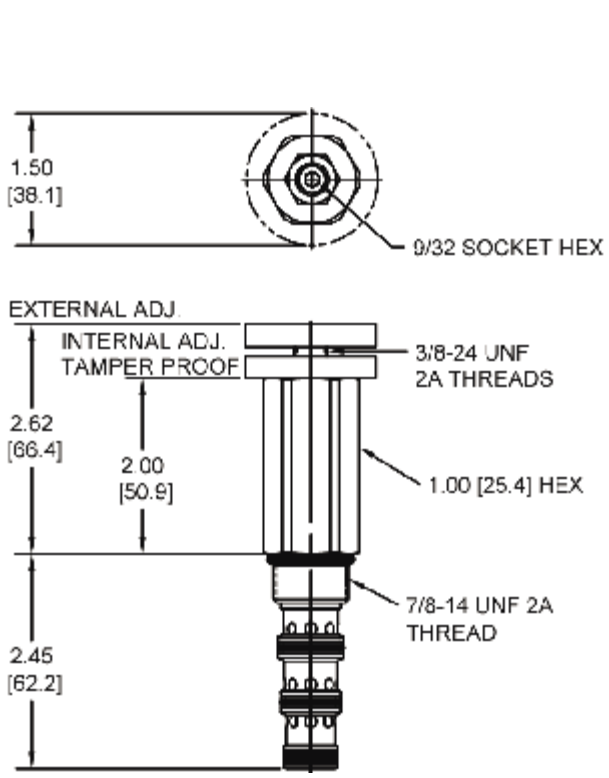


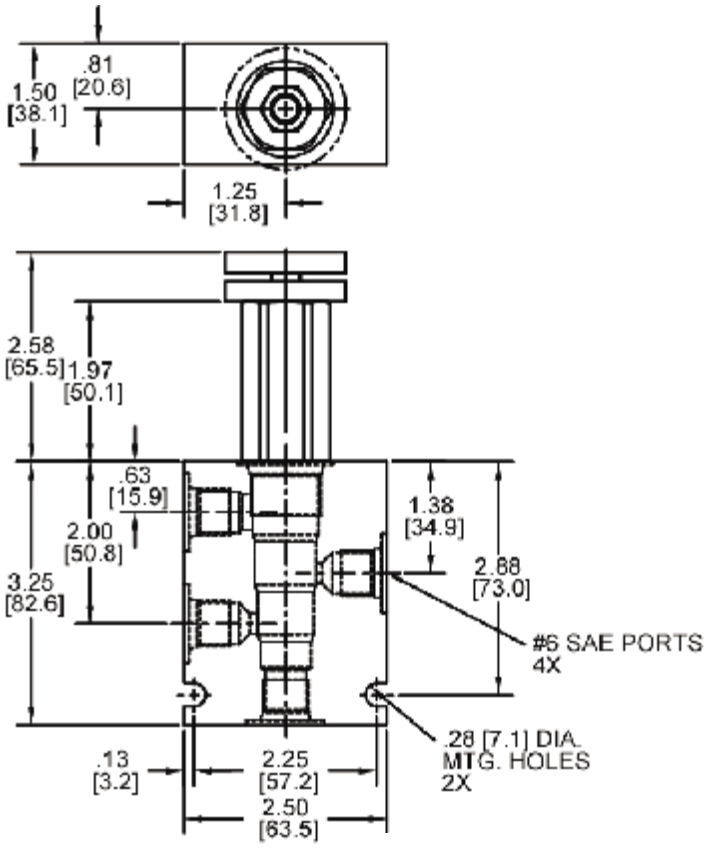


*Body Weight: .99 lbs (.45 kg)*

## ORDERING INFORMATION

**DG-PSA – ____ – ____ – ____**

**OPTIONS**

| | |
|---|---|
| Buna Standard | **00** |
| Viton Standard | **V0** |
| Buna, Knob | **0K** |
| Viton, Knob | **VK** |
| Buna, Internal Adjust | **0I** |
| Viton, Internal Adjust | **VI** |
| Buna, Tamper Proof | **0T** |
| Viton, Tamper Proof | **VT** |

**PRESSURE RANGE**

| | |
|---|---|
| **0425** | 50 - 425 PSI |
| **1500** | 425 - 1500 PSI |

**Tamper Proof**
Fill in 4 Digit Pressure Setting
Example: 0500 - 500 PSI

**BODIES**

| | |
|---|---|
| **Blank** | Without Body |
| **N** | 1/4" NPTF Ports |
| **S** | #6 SAE Ports |

**WARNING:** *the specifications/application data shown in our catalogs and data sheets are intended only as a general guide for the product described (herein). Any specific application should not be undertaken without independent study, evaluation, and testing for suitability.*



Via Malavolti, 36 - 41122 Modena - ITALY - Phone +39 (059) 254895 - Fax +39 (059) 253512 - mail: tecnord@tecnord.com - **www.tecnord.com**

## DG-PSC SEQUENCE VALVE, 2 WAY NORMALLY CLOSED, EXTERNAL PILOT

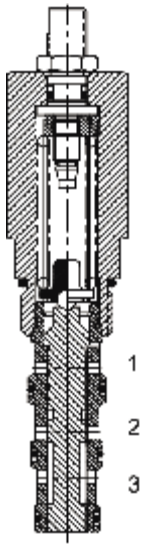


### DESCRIPTION

10 size, 7/8-14 thread, “Delta” series, 2 way normally closed sequence valve, external pilot.

### OPERATION

The DG-PSC in neutral (unpiloted), blocks flow between (3) and (2). The spring chamber is constantly vented at (1). On attainment of a predetermined pressure at (4), the cartridge shifts to allow flow from (3) to (2). Note that the backpressure value at (1) must be added to the selected pressure setting to determine pilot pressure.

### FEATURES

- Optional spring ranges to 1500 PSI (103 bar).
- Hardened parts for long life.
- Industry common cavity.

### HYDRAULIC SYMBOL

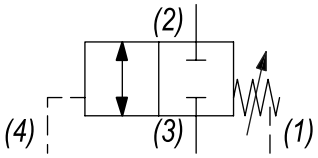


*Orifice .030 to .060 diameter recommended beneath port (4).*

### PERFORMANCE

Actual Test Data (Cartridge Only)

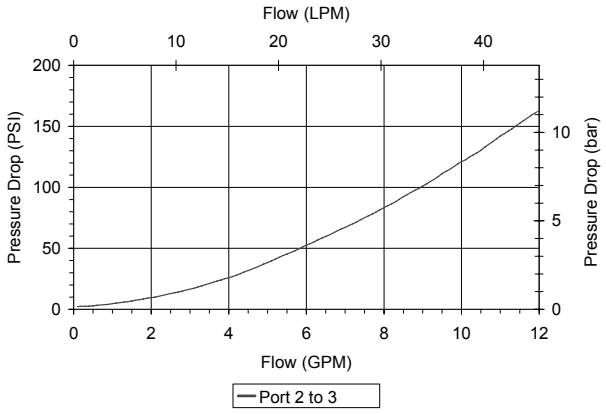


### VALVE SPECIFICATIONS

| | |
|---|---|
| Nominal Flow | 10 GPM (38 LPM) |
| Rated Operating Pressure | 3000 PSI (207 bar) |
| Typical Internal Leakage (150 SSU) | 5 cu in/min (82 ml/min) |
| Viscosity Range | 36 to 3000 SSU (3 to 647 cSt) |
| Filtration | ISO 18/16/13 |
| Media Operating Temp. Range | -40° to 250°F (-40° to 120°C) |
| Weight | .63 lbs (.28 kg) |
| Operating Fluid Media | General Purpose Hydraulic Fluid |
| Cartridge Torque Requirements | 30 ft-lbs (40.6 Nm) |
| Cavity | DELTA 4W |
| Cavity Form Tool (Finishing) | 40500002 |
| Seal Kit | 21191214 |

**WARNING:** *the specifications/application data shown in our catalogs and data sheets are intended only as a general guide for the product described (herein). Any specific application should not be undertaken without independent study, evaluation, and testing for suitability.*



Via Malavolti, 36 - 41122 Modena - ITALY - Phone +39 (059) 254895 - Fax +39 (059) 253512 - mail: tecnord@tecnord.com - **www.tecnord.com**

## DIMENSIONS

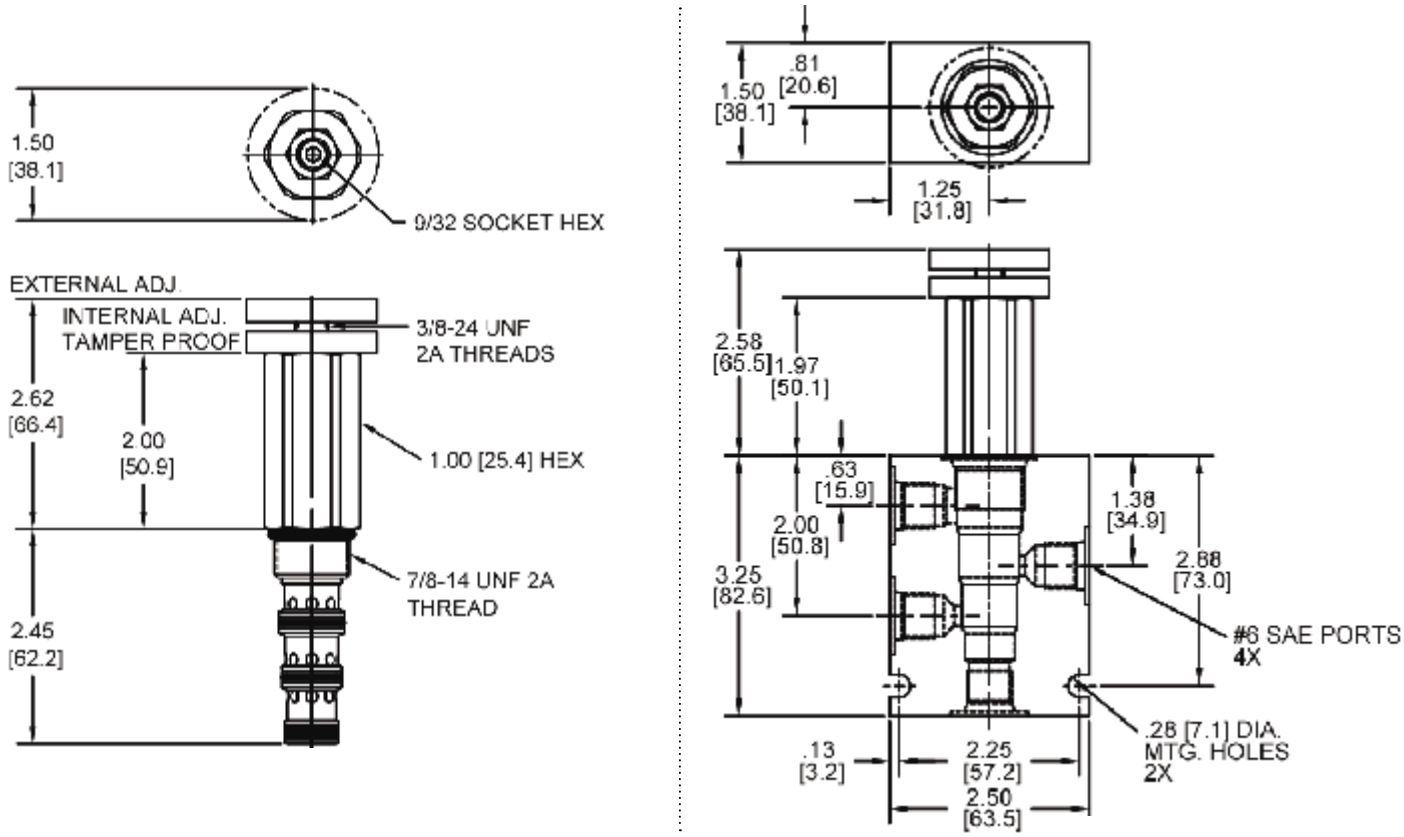


*Body Weight: .99 lbs (.45 kg)*

## ORDERING INFORMATION

**DG-PSC – ____ – ____ – ____**

**OPTIONS**

| | |
|---|---|
| Buna Standard | **00** |
| Viton Standard | **V0** |
| Buna, Knob | **0K** |
| Viton, Knob | **VK** |
| Buna, Internal Adjust | **0I** |
| Viton, Internal Adjust | **VI** |
| Buna, Tamper Proof | **0T** |
| Viton, Tamper Proof | **VT** |

**PRESSURE RANGE**

| | |
|---|---|
| **0425** | 50 - 425 PSI |
| **1500** | 425 - 1500 PSI |

**BODIES**

| | |
|---|---|
| **Blank** | Without Body |
| **N** | 1/4" NPTF Ports |
| **S** | #6 SAE Ports |

**Tamper Proof**
Fill in 4 Digit Pressure Setting
Example: 0500 - 500 PSI

**WARNING:** *the specifications/application data shown in our catalogs and data sheets are intended only as a general guide for the product described (herein). Any specific application should not be undertaken without independent study, evaluation, and testing for suitability.*



Via Malavolti, 36 - 41122 Modena - ITALY - Phone +39 (059) 254895 - Fax +39 (059) 253512 - mail: tecnord@tecnord.com - **www.tecnord.com**

## DG-PSI SEQUENCE VALVE, 3 WAY NORMALLY OPEN, INTERNAL PILOT

### DESCRIPTION

10 size, 7/8-14 thread, “Delta” series, 3 way normally open internal pilot sequence valve.

### OPERATION

The DG-PSI in neutral (un-piloted), allows flow between (3) and (2) bidirectional, while blocking at (4). The spring chamber is constantly vented at (1). On attainment of a predetermined pressure at (4), the cartridge shifts to close (3) to (2), while opening (4) to (3).

Note: that the backpressure value at (1) must be added to the selected pressure setting to determine pilot pressure necessary to open valve.

### FEATURES

- Optional spring ranges to 1500 PSI (103 bar).
- Hardened parts for long life.
- Industry common cavity.

### HYDRAULIC SYMBOL

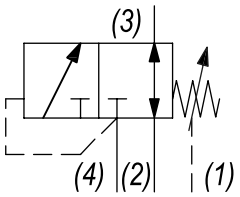


### PERFORMANCE

Actual Test Data (Cartridge Only)

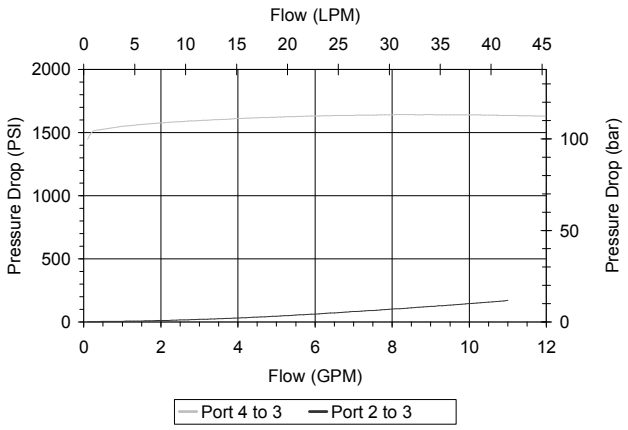


### VALVE SPECIFICATIONS

| | |
|---|---|
| Nominal Flow | 10 GPM (38 LTR/M) |
| Rated Operating Pressure | 3000 PSI (207 bar) |
| Typical Internal Leakage (150 SSU) | 5 cu in/min (82 ml/min) |
| Viscosity Range | 36 to 3000 SSU (3 to 647 cSt) |
| Filtration | ISO 18/16/13 |
| Media Operating Temp. Range | -40° to 250°F (-40° to 120°C) |
| Weight | .63 lbs (.28 kg) |
| Operating Fluid Media | General Purpose Hydraulic Fluid |
| Cartridge Torque Requirements | 30 ft-lbs (40.6 Nm) |
| Cavity | DELTA 4W |
| Cavity Form Tool (Finishing) | 40500002 |
| Seal Kit | 21191214 |

**WARNING:** *the specifications/application data shown in our catalogs and data sheets are intended only as a general guide for the product described (herein). Any specific application should not be undertaken without independent study, evaluation, and testing for suitability.*



Via Malavolti, 36 - 41122 Modena - ITALY - Phone +39 (059) 254895 - Fax +39 (059) 253512 - mail: tecnord@tecnord.com - **www.tecnord.com**

## DIMENSIONS

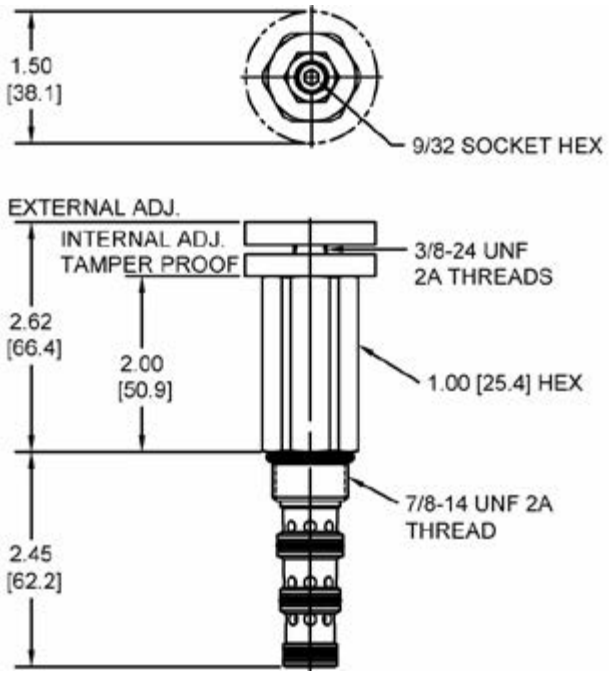


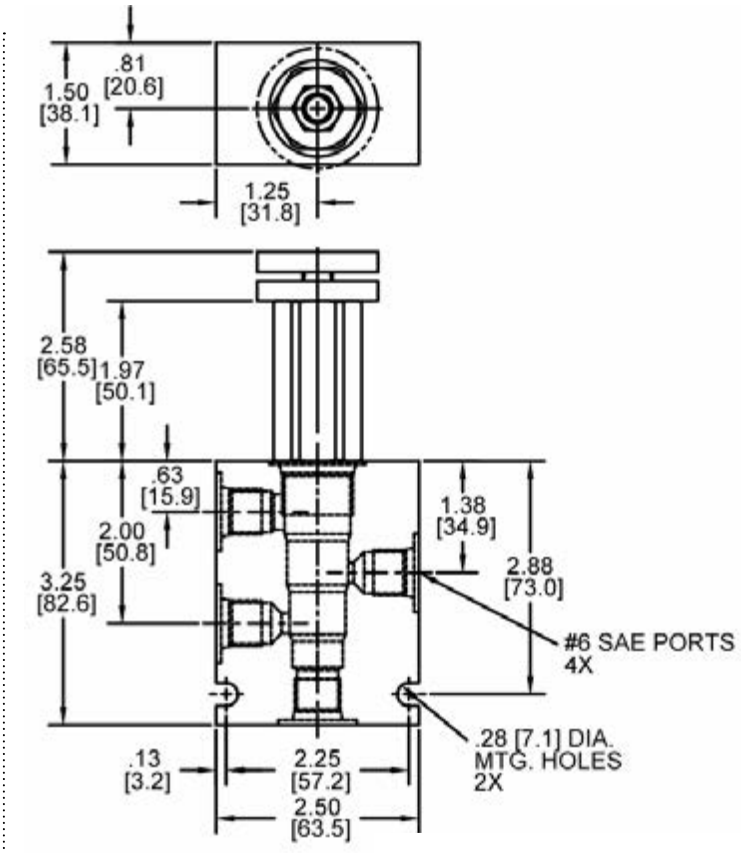


*Body Weight: .99 lbs (.45 kg)*

## ORDERING INFORMATION

**DG-PSI** – _____ – _____ – _____

**OPTIONS**

| | |
|---|---|
| Buna Standard | **00** |
| Viton Standard | **V0** |
| Buna, Knob | **0K** |
| Viton, Knob | **VK** |
| Buna, Internal Adjust | **0I** |
| Viton, Internal Adjust | **VI** |
| Buna, Tamper Proof | **0T** |
| Viton, Tamper Proof | **VT** |

**PRESSURE RANGE**

| | |
|---|---|
| **0425** | 50 - 425 PSI |
| **1500** | 425 - 1500 PSI |

**Tamper Proof**
Fill in 4 Digit Pressure Setting
Example: 0500 - 500 PSI

**BODIES**

| | |
|---|---|
| **Blank** | Without Body |
| **N** | 1/4" NPTF Ports |
| **S** | #6 SAE Ports |

**WARNING:** *the specifications/application data shown in our catalogs and data sheets are intended only as a general guide for the product described (herein). Any specific application should not be undertaken without independent study, evaluation, and testing for suitability.*



Via Malavolti, 36 - 41122 Modena - ITALY - Phone +39 (059) 254895 - Fax +39 (059) 253512 - mail: tecnord@tecnord.com - **www.tecnord.com**

## DG-PSO SEQUENCE VALVE, 2 WAY NORMALLY OPEN, EXTERNAL PILOT

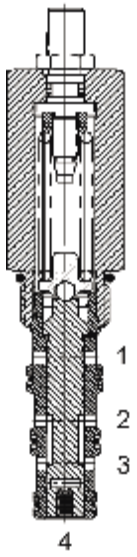


### DESCRIPTION

10 size, 7/8-14 thread, “Delta” series, 2 way normally open sequence valve, external pilot.

### OPERATION

The DG-PSO in neutral (un-piloted), allows flow between (3) and (2) bi-directionally. The spring chamber is constantly vented at (1). On attainment of a predetermined pressure at (4), the cartridge shifts to block flow from (3) to (2).

Note: that the backpressure value at (1) must be added to the selected pressure setting to determine pilot pressure necessary to close valve.

### FEATURES

- Optional spring ranges to 1500 PSI (103 bar).
- Hardened parts for long life.
- Industry common cavity.

### HYDRAULIC SYMBOL

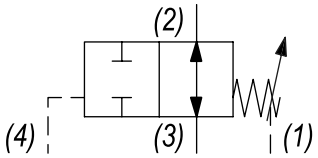


*Orifice .030 to .060 diameter recommended beneath port (4).*

### PERFORMANCE

Actual Test Data (Cartridge Only)

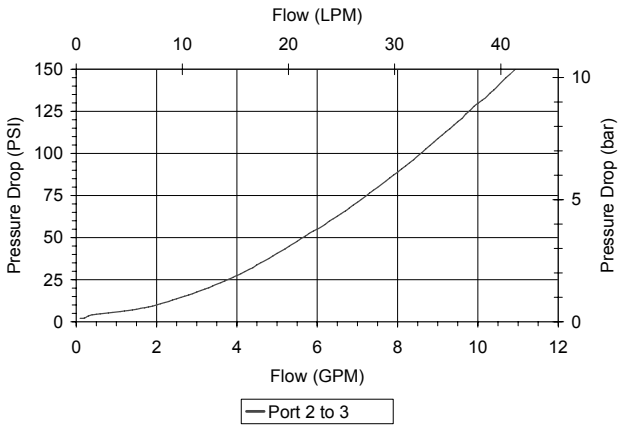


### VALVE SPECIFICATIONS

| | |
|---|---|
| Nominal Flow | 10 GPM (38 LTR/M) |
| Rated Operating Pressure | 3000 PSI (207 bar) |
| Typical Internal Leakage (150 SSU) | 5 cu in/min (82 ml/min) |
| Viscosity Range | 36 to 3000 SSU (3 to 647 cSt) |
| Filtration | ISO 18/16/13 |
| Media Operating Temp. Range | -40° to 250°F (-40° to 120°C) |
| Weight | .62 lbs (.28 kg) |
| Operating Fluid Media | General Purpose Hydraulic Fluid |
| Cartridge Torque Requirements | 30 ft-lbs (40.6 Nm) |
| Cavity | DELTA 4W |
| Cavity Form Tool (Finishing) | 40500002 |
| Seal Kit | 21191214 |

**WARNING:** *the specifications/application data shown in our catalogs and data sheets are intended only as a general guide for the product described (herein). Any specific application should not be undertaken without independent study, evaluation, and testing for suitability.*



Via Malavolti, 36 - 41122 Modena - ITALY - Phone +39 (059) 254895 - Fax +39 (059) 253512 - mail: tecnord@tecnord.com - **www.tecnord.com**

## DIMENSIONS

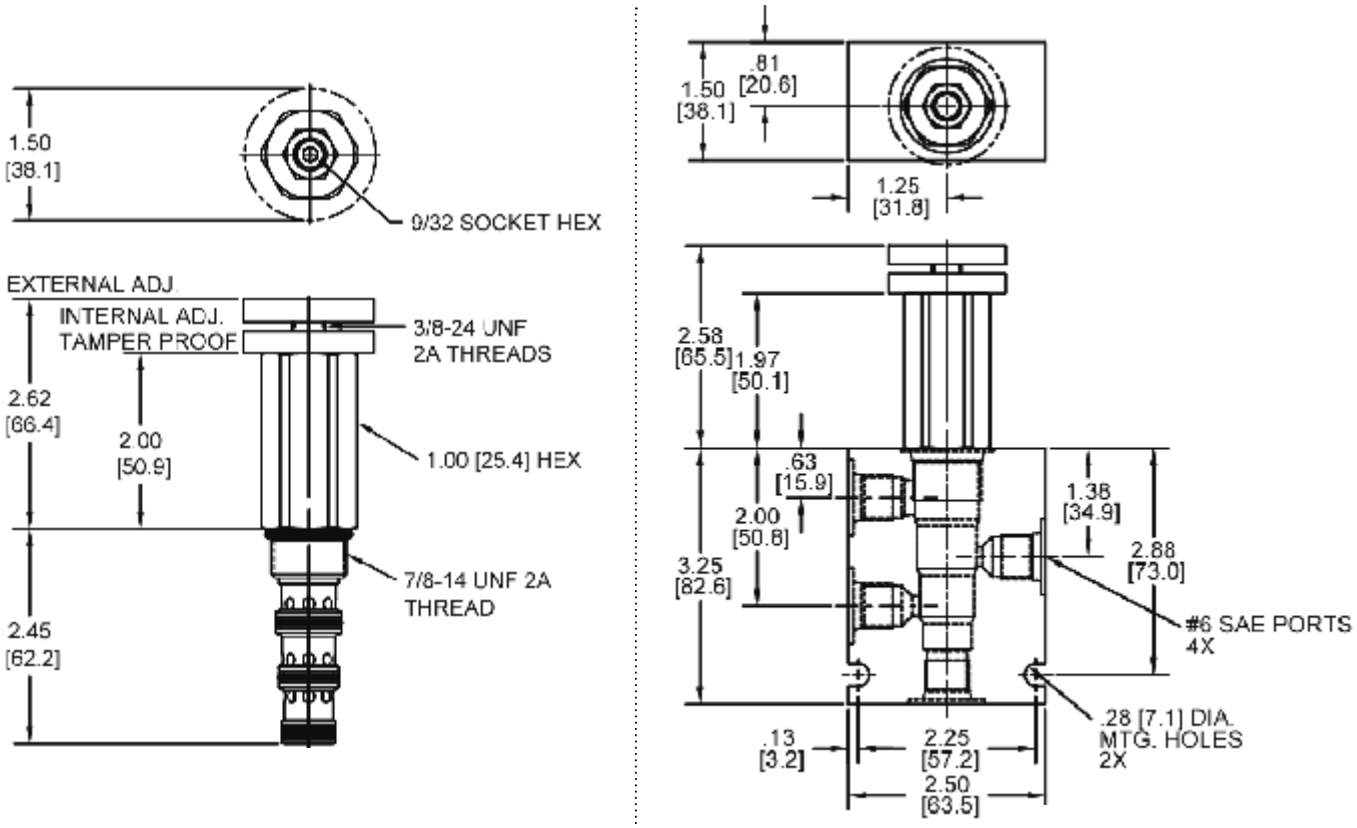


*Body Weight: .99 lbs (.45 kg)*

## ORDERING INFORMATION

**DG-PSO** – _____ – _____ – _____

**OPTIONS**

| | |
|---|---|
| Buna Standard | **00** |
| Viton Standard | **V0** |
| Buna, Knob | **0K** |
| Viton, Knob | **VK** |
| Buna, Internal Adjust | **0I** |
| Viton, Internal Adjust | **VI** |
| Buna, Tamper Proof | **0T** |
| Viton, Tamper Proof | **VT** |

**PRESSURE RANGE**

| | |
|---|---|
| **0425** | 50 - 425 PSI |
| **1500** | 425 - 1500 PSI |

**Tamper Proof**
Fill in 4 Digit Pressure Setting
Example: 0500 - 500 PSI

**BODIES**

| | |
|---|---|
| **Blank** | Without Body |
| **N** | 1/4" NPTF Ports |
| **S** | #6 SAE Ports |

**WARNING:** *the specifications/application data shown in our catalogs and data sheets are intended only as a general guide for the product described (herein). Any specific application should not be undertaken without independent study, evaluation, and testing for suitability.*



Via Malavolti, 36 - 41122 Modena - ITALY - Phone +39 (059) 254895 - Fax +39 (059) 253512 - mail: tecnord@tecnord.com - **www.tecnord.com**

## DG-PSS HOT OIL SHUTTLE VALVE

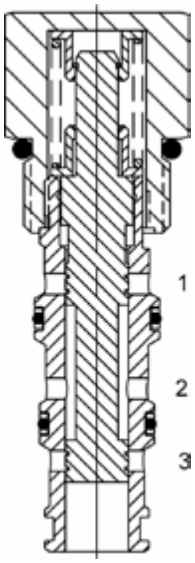


### DESCRIPTION

10 size, 7/8-14 thread, “Delta” series, hot oil shuttle valve.

### OPERATION

The DG-PSS, with internal piloting at port (1) or (3), oil will flow from the port opposite of the port piloted to port (2), thus removing oil from the low-pressure side for cooling or filtration purposes. The Valve is spring bias neutral, relying solely on the internal pilot pressure signal to shift to either side. The DG-PSS is closed in transition.

### FEATURES

- Hardened parts for long life.
- Industry common cavity.

### HYDRAULIC SYMBOL

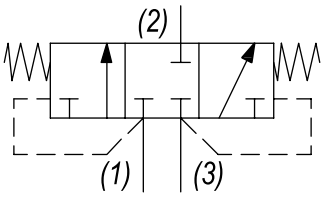


### PERFORMANCE

Actual Test Data (Cartridge Only)

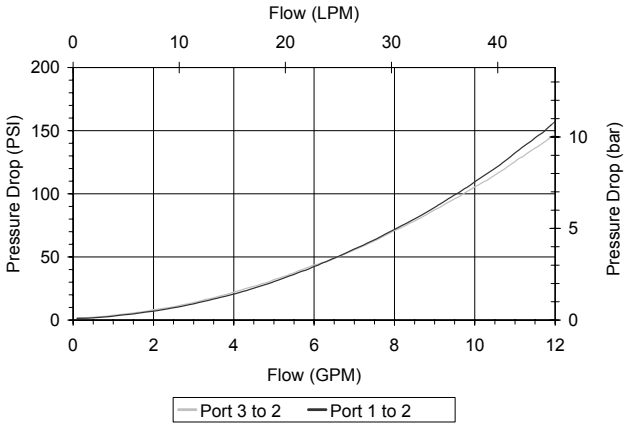


### VALVE SPECIFICATIONS

| | |
|---|---|
| Nominal Flow | 12 GPM (45 LTR/M) |
| Rated Operating Pressure | 3000 PSI (207 bar) |
| Typical Internal Leakage (150 SSU) | 5 cu/in per/min (82 ml/min) |
| Viscosity Range | 36 to 3000 SSU (3 to 647 cSt) |
| Filtration | ISO 18/16/13 |
| Media Operating Temp. Range | -40° to 250°F (-40° to 120°C) |
| Weight | .34 lbs (.15 kg) |
| Operating Fluid Media | General Purpose Hydraulic Fluid |
| Cartridge Torque Requirements | 30 ft-lbs (40.6 Nm) |
| Cavity | DELTA 4W |
| Cavity Form Tool (Finishing) | 40500002 |
| Seal Kit | 21191212 |

**WARNING:** *the specifications/application data shown in our catalogs and data sheets are intended only as a general guide for the product described (herein). Any specific application should not be undertaken without independent study, evaluation, and testing for suitability.*



Via Malavolti, 36 - 41122 Modena - ITALY - Phone +39 (059) 254895 - Fax +39 (059) 253512 - mail: tecnord@tecnord.com - **www.tecnord.com**

## DIMENSIONS

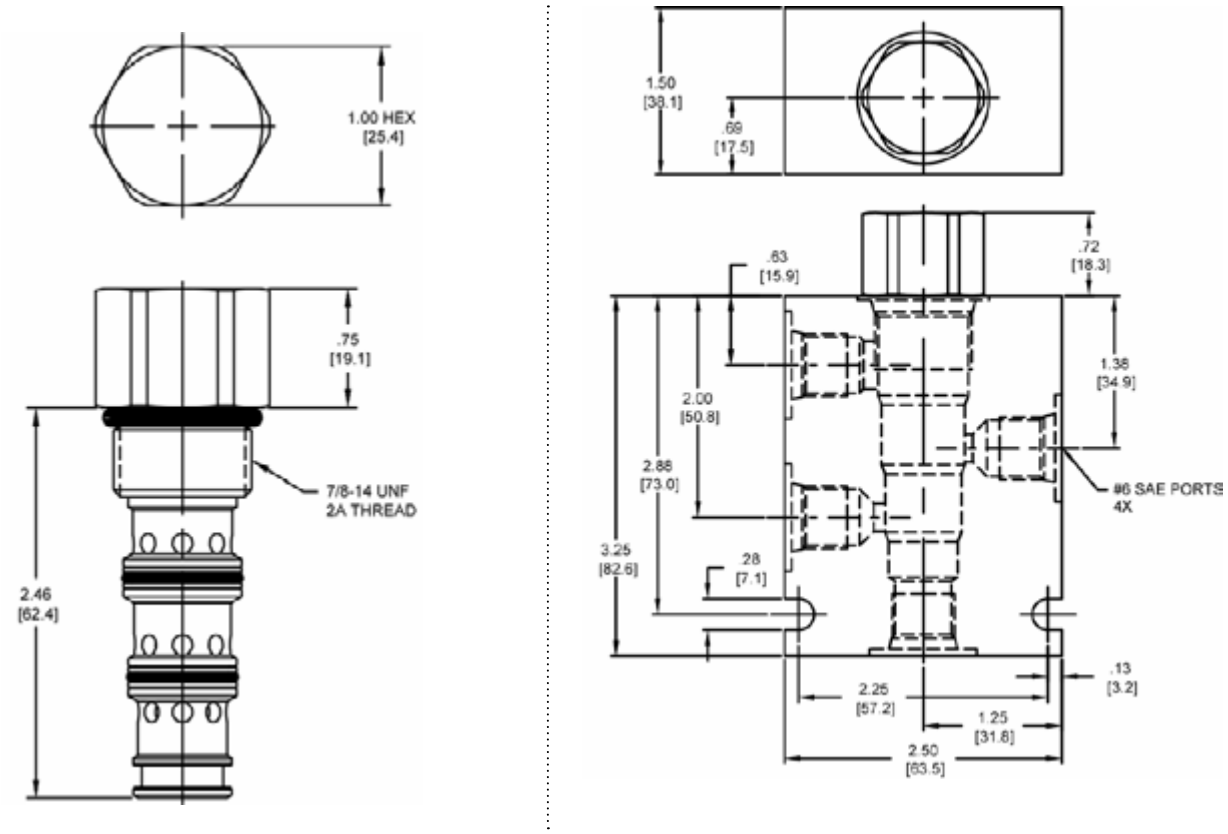


*Body Weight: .99 lbs (.45 kg)*

## ORDERING INFORMATION

**DG-PSS – ____ – ____ – ____**

**OPTIONS**

| | |
|---|---|
| Buna Standard | **00** |
| Viton Standard | **V0** |

**CRACK PRESSURE**

| | |
|---|---|
| **0040** | 40 PSI |
| **0080** | 80 PSI |
| **0120** | 120 PSI |
| **0160** | 160 PSI |
| **0000** | 0 PSI (NO SPRING) |

**BODIES**

| | |
|---|---|
| **Blank** | Without Body |
| **N** | 1/4" NPTF Ports |
| **S** | #6 SAE Ports |

**WARNING:** *the specifications/application data shown in our catalogs and data sheets are intended only as a general guide for the product described (herein). Any specific application should not be undertaken without independent study, evaluation, and testing for suitability.*



Via Malavolti, 36 - 41122 Modena - ITALY - Phone +39 (059) 254895 - Fax +39 (059) 253512 - mail: tecnord@tecnord.com - **www.tecnord.com**

## DG-PTC SEQUENCE VALVE, NORMALLY OPEN, EXTERNAL PILOT

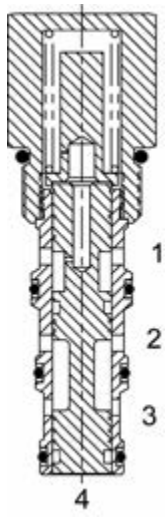


### DESCRIPTION

10 size, 7/8-14 thread, “Delta” series, external pilot, normally open.

### OPERATION

The DG-PTC allows flow at ports (3) and (2). On attainment of a predetermined pressure at port (4), the valve shifts to block flow from port (3) to (2). Spring Chamber is constantly vented to port (1).

### FEATURES

- Hardened parts for long life.
- Industry common cavity.

### HYDRAULIC SYMBOL

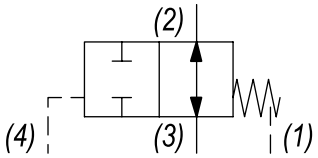


*Orifice .030 to .060 diameter recommended beneath port (4).*

### PERFORMANCE

Actual Test Data (Cartridge Only)

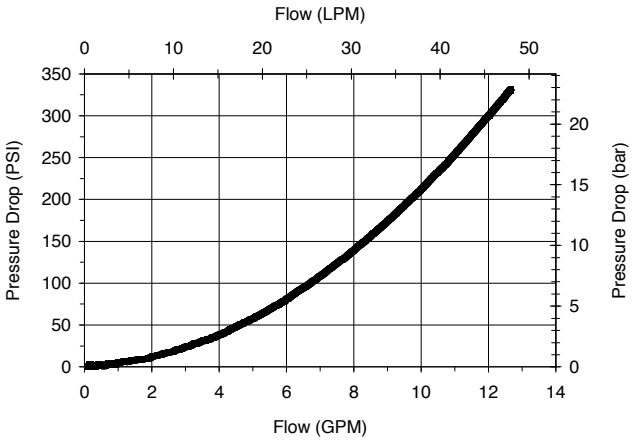


### VALVE SPECIFICATIONS

| | |
|---|---|
| Nominal Flow | 10 GPM (38 LTR/M) |
| Rated Operating Pressure | 3000 PSI (207 bar) |
| Typical Internal Leakage (150 SSU) | 5 cu in/min (82 ml/min) |
| Viscosity Range | 36 to 3000 SSU (3 to 647 cSt) |
| Filtration | ISO 18/16/13 |
| Media Operating Temp. Range | -40° to 250°F (-40° to 120°C) |
| Weight | .39 lbs (.17 kg) |
| Operating Fluid Media | General Purpose Hydraulic Fluid |
| Cartridge Torque Requirements | 30 ft-lbs (40.6 Nm) |
| Cavity | DELTA 4W |
| Cavity Form Tool (Finishing) | 40500002 |
| Seal Kit | 21191108 |

**WARNING:** *the specifications/application data shown in our catalogs and data sheets are intended only as a general guide for the product described (herein). Any specific application should not be undertaken without independent study, evaluation, and testing for suitability.*



Via Malavolti, 36 - 41122 Modena - ITALY - Phone +39 (059) 254895 - Fax +39 (059) 253512 - mail: tecnord@tecnord.com - **www.tecnord.com**

## DIMENSIONS

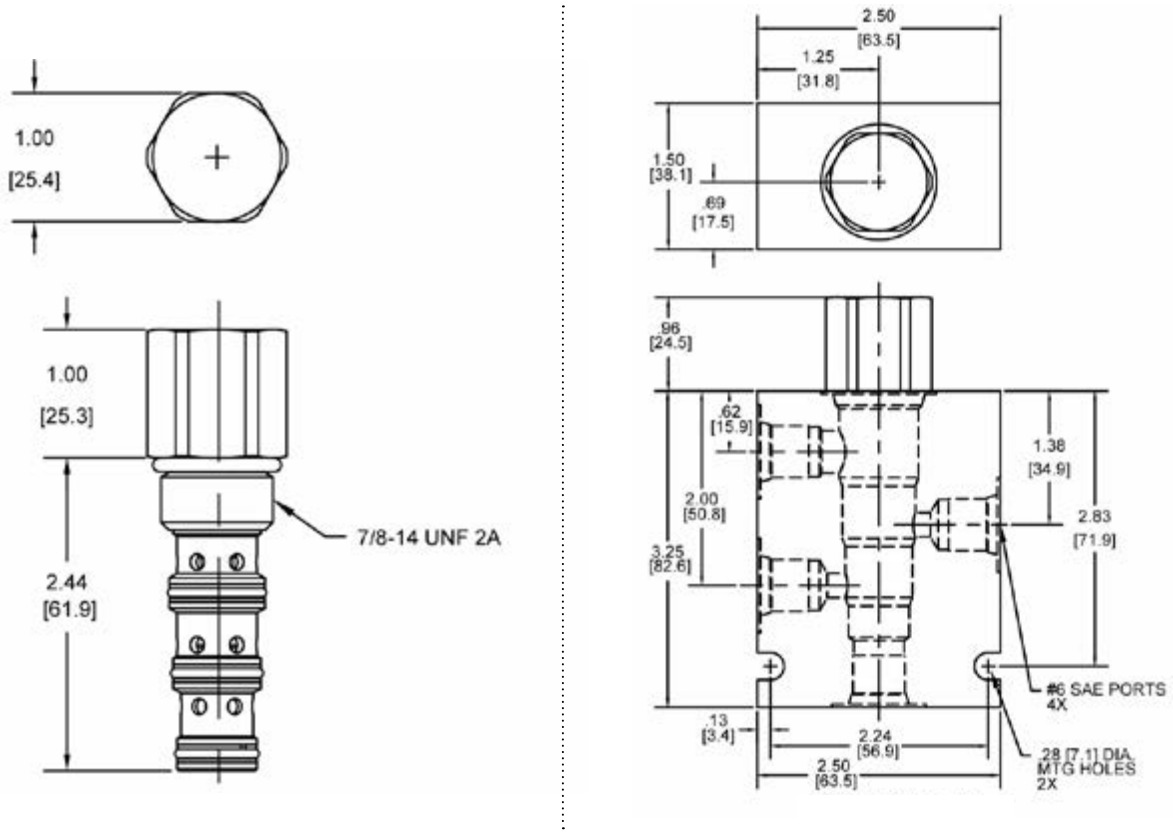


*Body Weight: .99 lbs (.45 kg)*

## ORDERING INFORMATION

**DG-PTC – ____ – ____ – ____**

**OPTIONS**

| | |
|---|---|
| Buna Standard | **00** |
| Viton Standard | **V0** |

**SPRING BIAS**

| | |
|---|---|
| **0050** | 50 PSI |
| **0180** | 180 PSI |
| | ±10% |

**BODIES**

| | |
|---|---|
| **Blank** | Without Body |
| **N** | 1/4" NPTF Ports |
| **S** | #6 SAE Ports |

**WARNING:** *the specifications/application data shown in our catalogs and data sheets are intended only as a general guide for the product described (herein). Any specific application should not be undertaken without independent study, evaluation, and testing for suitability.*

## DG-PTO SEQUENCE VALVE, NORMALLY CLOSED, EXTERNAL PILOT

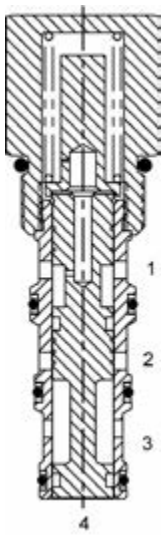


### DESCRIPTION

10 size, 7/8-14 thread, “Delta” series, external pilot, normally closed.

### OPERATION

The DG-PTO blocks flow at ports (3) and (2). On attainment of a predetermined pressure at port (4), the valve shifts to allow flow from port (3) to (2). Spring Chamber is constantly vented to port (1).

### FEATURES

- Hardened parts for long life.
- Industry common cavity.

### HYDRAULIC SYMBOL

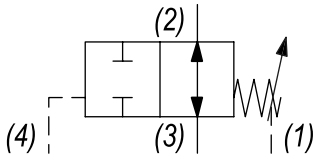


*Orifice .030 to .060 diameter recommended beneath port (4).*

### PERFORMANCE

Actual Test Data (Cartridge Only)

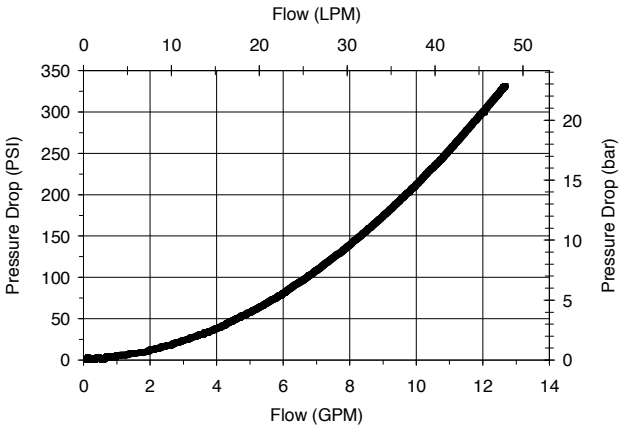


### VALVE SPECIFICATIONS

| | |
|---|---|
| Nominal Flow | 10 GPM (38 LTR/M) |
| Rated Operating Pressure | 3000 PSI (207 bar) |
| Typical Internal Leakage (150 SSU) | 5 cu in/min (82 ml/min) |
| Viscosity Range | 36 to 3000 SSU (3 to 647 cSt) |
| Filtration | ISO 18/16/13 |
| Media Operating Temp. Range | -40° to 250°F (-40° to 120°C) |
| Weight | .39 lbs (.17 kg) |
| Operating Fluid Media | General Purpose Hydraulic Fluid |
| Cartridge Torque Requirements | 30 ft-lbs (40.6 Nm) |
| Cavity | DELTA 4W |
| Cavity Form Tool (Finishing) | 40500002 |
| Seal Kit | 21191108 |

**WARNING:** *the specifications/application data shown in our catalogs and data sheets are intended only as a general guide for the product described (herein). Any specific application should not be undertaken without independent study, evaluation, and testing for suitability.*



Via Malavolti, 36 - 41122 Modena - ITALY - Phone +39 (059) 254895 - Fax +39 (059) 253512 - mail: tecnord@tecnord.com - **www.tecnord.com**

## DIMENSIONS

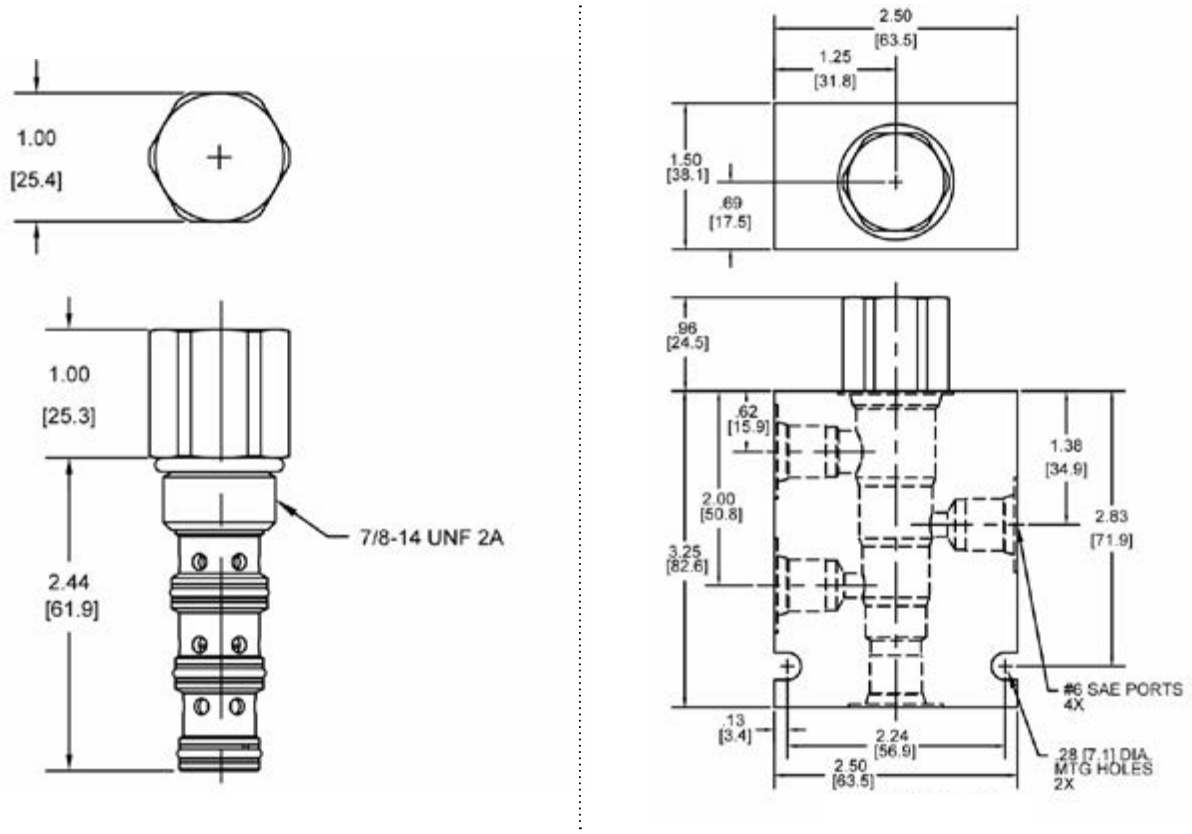


*Body Weight: .99 lbs (.45 kg)*

## ORDERING INFORMATION

**DG-PTO** – ____ – ____ – ____

**OPTIONS**
Buna Standard **00**
Viton Standard **V0**

**SPRING BIAS**
**0050** 50 PSI
**0180** 180 PSI
±10%

**BODIES**
**Blank** Without Body
**N** 1/4" NPTF Ports
**S** #6 SAE Ports

**WARNING:** *the specifications/application data shown in our catalogs and data sheets are intended only as a general guide for the product described (herein). Any specific application should not be undertaken without independent study, evaluation, and testing for suitability.*



Via Malavolti, 36 - 41122 Modena - ITALY - Phone +39 (059) 254895 - Fax +39 (059) 253512 - mail: tecnord@tecnord.com - **www.tecnord.com**

## DF-PWE SEQUENCE VALVE, NORMALLY CLOSED, EXTERNAL PILOT

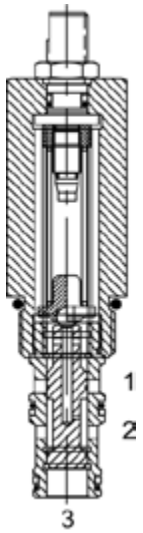


### DESCRIPTION

10 size, 7/8-14 thread, “Delta” series, external pilot normally closed, sequence valve.

### OPERATION

The DF-PWE blocks flow at ports (2) and (1). On attainment of a predetermined pressure at (3) the valve shifts to a allow flow from (1) to (2).

### FEATURES

- Hardened parts for long life.
- Optional spring ranges to 1500 PSI (103 bar).
- Industry common Cavity.

### HYDRAULIC SYMBOL

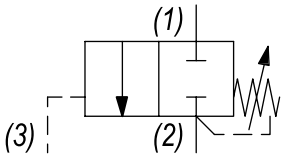


*Orifice .030 to .060 diameter recommended beneath port (3).*

### PERFORMANCE

Actual Test Data (Cartridge Only)

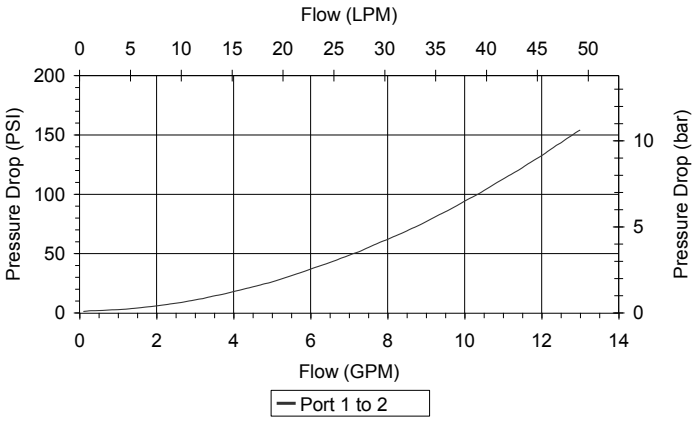


### VALVE SPECIFICATIONS

| | |
|---|---|
| Nominal Flow | 10 GPM (38 LTR/M) |
| Rated Operating Pressure | 3000 PSI (207 bar) |
| Typical Internal Leakage (150 SSU) | 5 cu in/min (82 ml/min) |
| Viscosity Range | 36 to 3000 SSU (3 to 647 cSt) |
| Filtration | ISO 18/16/13 |
| Media Operating Temp. Range | -40° to 250°F (-40° to 120°C) |
| Weight | .57 lbs (.26 kg) |
| Operating Fluid Media | General Purpose Hydraulic Fluid |
| Cartridge Torque Requirements | 30 ft-lbs (40.6 Nm) |
| Cavity | DELTA 3W |
| Cavity Form Tool (Finishing) | 40500001 |
| Seal Kit | 21191206 |

**WARNING:** *the specifications/application data shown in our catalogs and data sheets are intended only as a general guide for the product described (herein). Any specific application should not be undertaken without independent study, evaluation, and testing for suitability.*



Via Malavolti, 36 - 41122 Modena - ITALY - Phone +39 (059) 254895 - Fax +39 (059) 253512 - mail: tecnord@tecnord.com - **www.tecnord.com**

## DIMENSIONS

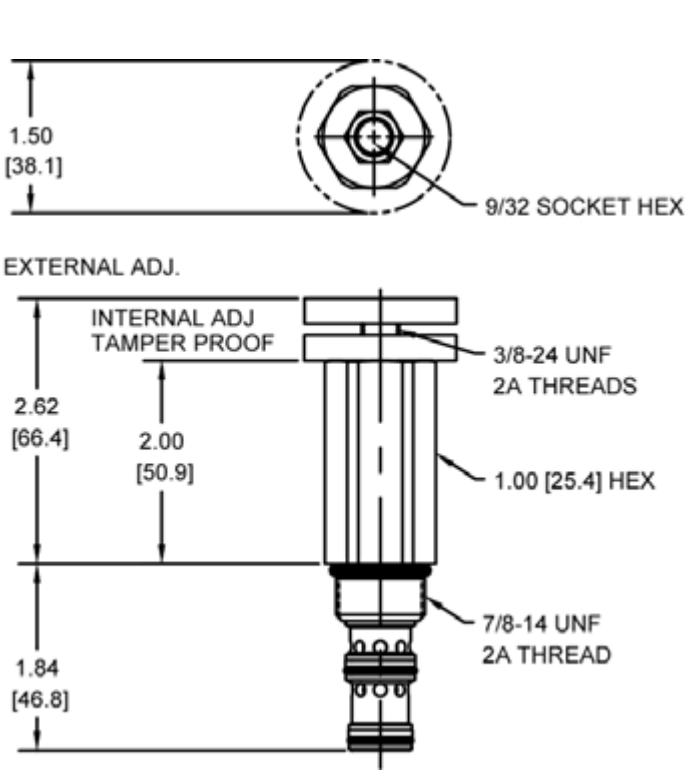


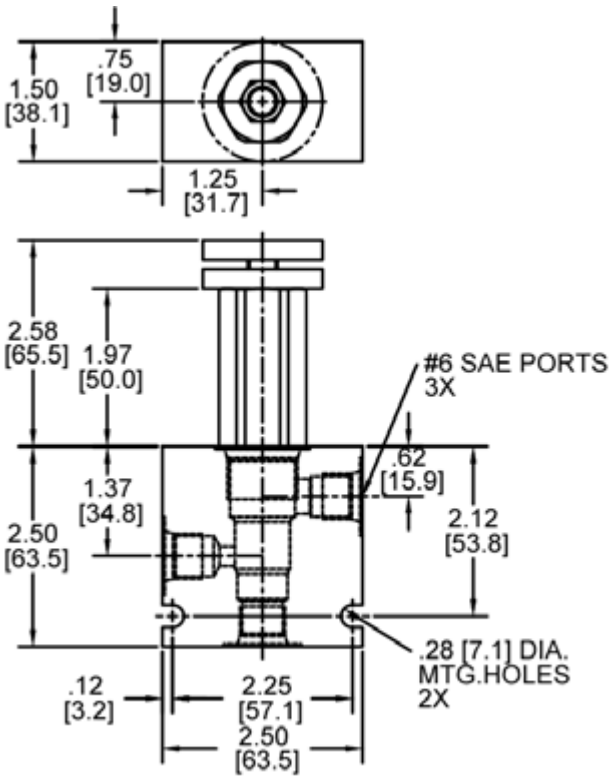


*Body Weight: .76 lbs (.35 kg)*

## ORDERING INFORMATION

**DF-PWE – ____ – ____ – ____**

**OPTIONS**

| | |
|---|---|
| Buna Standard | **00** |
| Viton Standard | **V0** |
| Buna, Knob | **0K** |
| Viton, Knob | **VK** |
| Buna, Internal Adjust | **0I** |
| Viton, Internal Adjust | **VI** |
| Buna, Tamper Proof | **0T** |
| Viton, Tamper Proof | **VT** |

**SPRING BIAS**

| | |
|---|---|
| **0425** | 50-425 PSI |
| **1500** | 425-1500 PSI |

**Tamper Proof**
Fill in 4 Digit Pressure Setting
Example: 0500 - 500 PSI

**BODIES**

| | |
|---|---|
| **Blank** | Without Body |
| **N** | 1/4" NPTF Ports |
| **S** | #6 SAE Ports |

**WARNING:** *the specifications/application data shown in our catalogs and data sheets are intended only as a general guide for the product described (herein). Any specific application should not be undertaken without independent study, evaluation, and testing for suitability.*



Via Malavolti, 36 - 41122 Modena - ITALY - Phone +39 (059) 254895 - Fax +39 (059) 253512 - mail: tecnord@tecnord.com - **www.tecnord.com**

## DF-PWI SEQUENCE VALVE, INTERNAL PILOT AND DRAIN

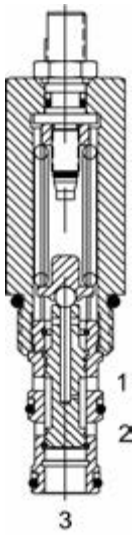


### DESCRIPTION

10 size, 7/8-14 thread, “Delta” series, internal pilot and drain, sequence valve.

### OPERATION

The DF-PWI blocks flow at (3) and allows flow from (2) to (1). On attainment of a predetermined pressure at (3) the valve shifts to a allow flow from (3) to (2) and block flow at (1).

### FEATURES

- Hardened parts for long life.
- Optional spring ranges to 1500 PSI (103 bar).
- Industry common Cavity.

### HYDRAULIC SYMBOL

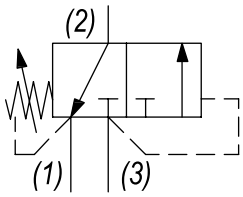


### PERFORMANCE

Actual Test Data (Cartridge Only)

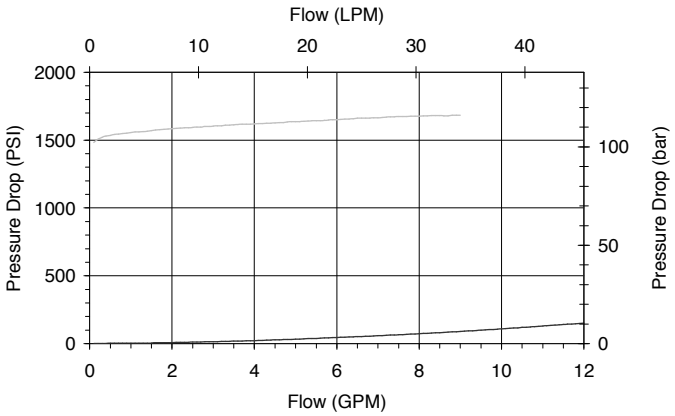


### VALVE SPECIFICATIONS

| | |
|---|---|
| Nominal Flow | 8 GPM (30 LPM) |
| Rated Operating Pressure | 3000 PSI (207 bar) |
| Typical Internal Leakage (150 SSU) | 5 cu in/min (82 ml/min) |
| Viscosity Range | 36 to 3000 SSU (3 to 647 cSt) |
| Filtration | ISO 18/16/13 |
| Media Operating Temp. Range | -40° to 250°F (-40° to 120°C) |
| Weight | .57 lbs (.26 kg) |
| Operating Fluid Media | General Purpose Hydraulic Fluid |
| Cartridge Torque Requirements | 30 ft-lbs (40.6 Nm) |
| Cavity | DELTA 3W |
| Cavity Form Tool (Finishing) | 40500001 |
| Seal Kit | 21191206 |

**WARNING:** *the specifications/application data shown in our catalogs and data sheets are intended only as a general guide for the product described (herein). Any specific application should not be undertaken without independent study, evaluation, and testing for suitability.*



Via Malavolti, 36 - 41122 Modena - ITALY - Phone +39 (059) 254895 - Fax +39 (059) 253512 - mail: tecnord@tecnord.com - **www.tecnord.com**

## DIMENSIONS

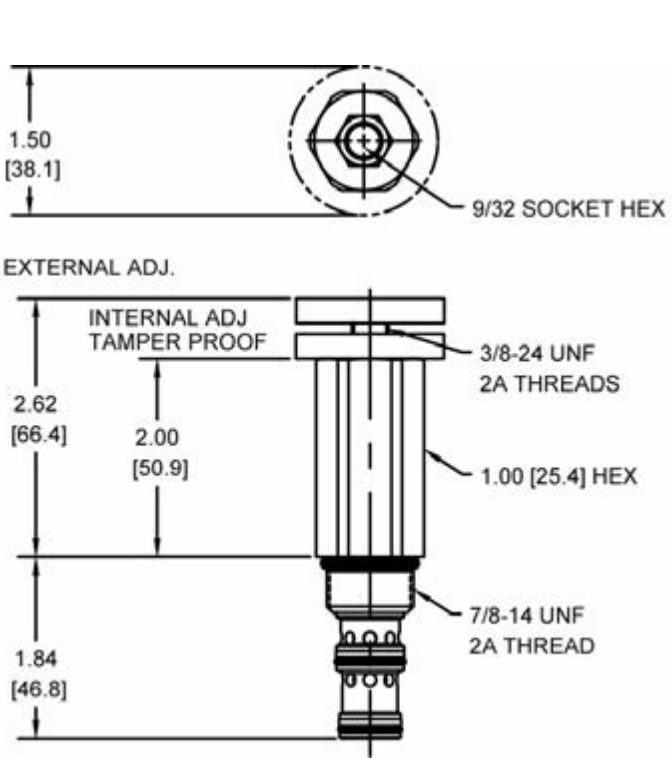


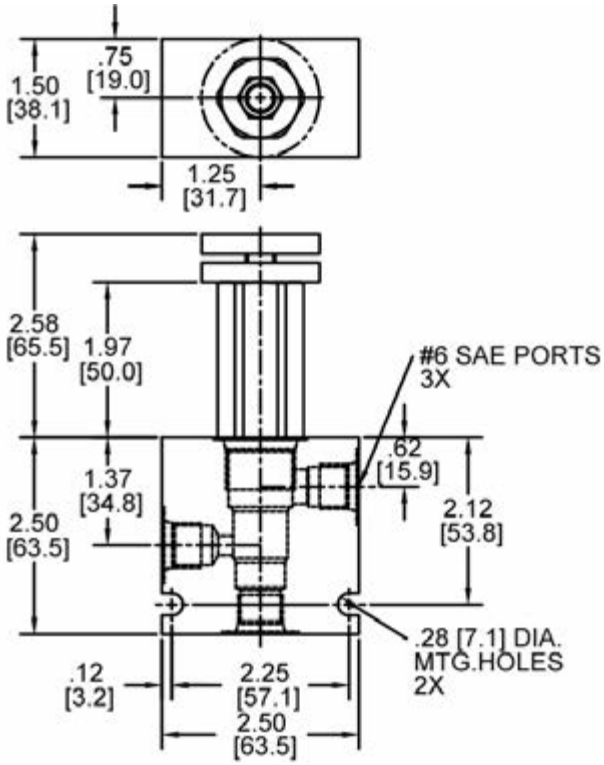


*Body Weight: .76 lbs (.35 kg)*

## ORDERING INFORMATION

**DF-PWI – ____ – ____ – ____**

**OPTIONS**

| | |
|---|---|
| Buna Standard | **00** |
| Viton Standard | **V0** |
| Buna, Knob | **0K** |
| Viton, Knob | **VK** |
| Buna, Internal Adjust | **0I** |
| Viton, Internal Adjust | **VI** |
| Buna, Tamper Proof | **0T** |
| Viton, Tamper Proof | **VT** |

**PRESSURE RANGE**

| | |
|---|---|
| **0425** | 50-425 PSI |
| **1500** | 425-1500 PSI |

**Tamper Proof**
Fill in 4 Digit Pressure Setting
Example: 0500 - 500 PSI

**BODIES**

| | |
|---|---|
| **Blank** | Without Body |
| **N** | 1/4" NPTF Ports |
| **S** | #6 SAE Ports |

**WARNING:** *the specifications/application data shown in our catalogs and data sheets are intended only as a general guide for the product described (herein). Any specific application should not be undertaken without independent study, evaluation, and testing for suitability.*



Via Malavolti, 36 - 41122 Modena - ITALY - Phone +39 (059) 254895 - Fax +39 (059) 253512 - mail: tecnord@tecnord.com - **www.tecnord.com**

## SL-PWA SEQUENCE VALVE, NORMALLY CLOSED, INTERNAL PILOT

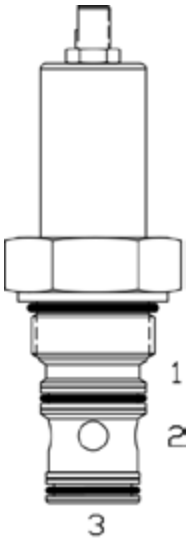


### DESCRIPTION

16 size, 1 5/16-12 thread, “Super” series, internal pilot normally closed, sequence valve.

### OPERATION

The SL-PWA blocks flow from ports (3) to (2). On attainment of a predetermined pressure at (3) the valve shifts to allow flow from (3) to (2). Port (1) should be a tank line.

### FEATURES

- Hardened parts for long life.
- Industry common cavity.

### HYDRAULIC SYMBOL

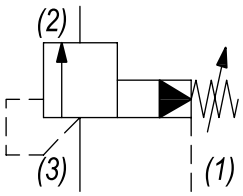


### PERFORMANCE

Actual Test Data (Cartridge Only)

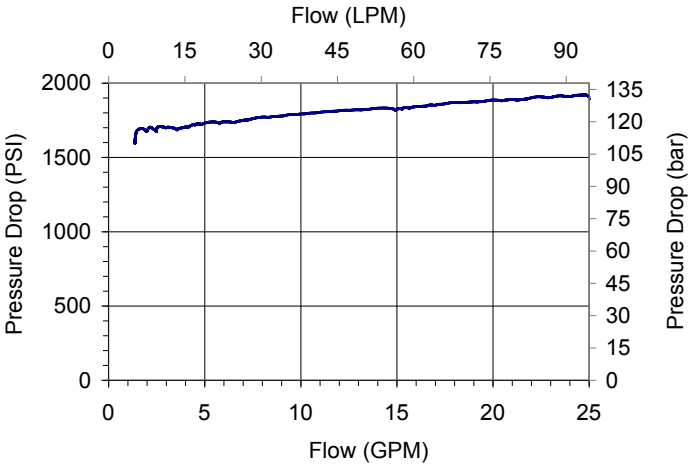


### VALVE SPECIFICATIONS

| | |
|---|---|
| Nominal Flow | 40 GPM (151 LPM) |
| Rated Operating Pressure | 3500 PSI (241 bar) |
| Viscosity Range | 36 to 3000 SSU (3 to 647 cSt) |
| Filtration | ISO 18/16/13 |
| Media Operating Temp. Range | -40° to 250°F (-40° to 120°C) |
| Weight | 1.15 lbs (.52 kg) |
| Operating Fluid Media | General Purpose Hydraulic Fluid |
| Cartridge Torque Requirements | 90 ft-lbs (122 Nm) |
| Cavity | SUPER 3WS |
| Cavity Form Tool (Finishing) | 40500021 |
| Seal Kit | 21191404 |

**WARNING:** *the specifications/application data shown in our catalogs and data sheets are intended only as a general guide for the product described (herein). Any specific application should not be undertaken without independent study, evaluation, and testing for suitability.*



Via Malavolti, 36 - 41122 Modena - ITALY - Phone +39 (059) 254895 - Fax +39 (059) 253512 - mail: tecnord@tecnord.com - **www.tecnord.com**

## DIMENSIONS

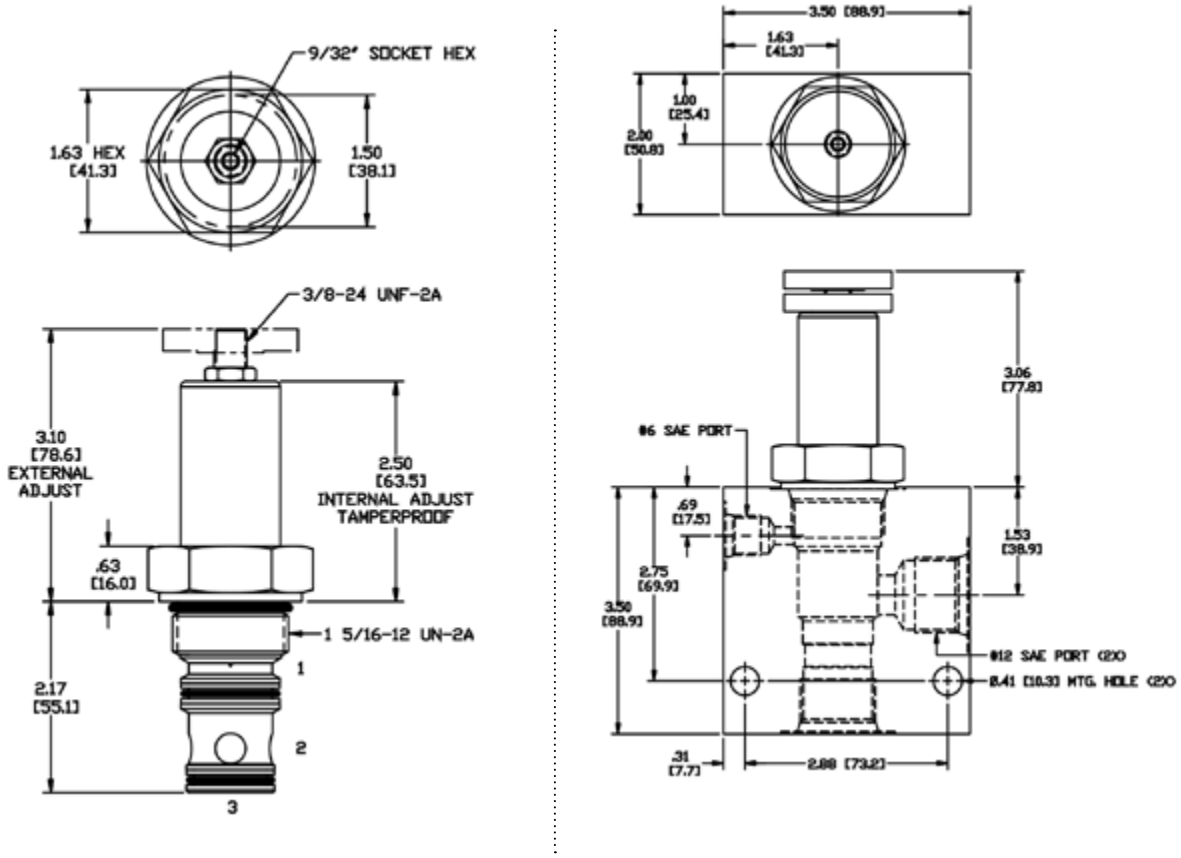


*Body Weight: 1.89 lbs (.86 kg)*

## ORDERING INFORMATION

**SL-PWA – ____ – ____ – ____**

**OPTIONS**

| | |
|---|---|
| Buna Standard | **00** |
| Viton Standard | **V0** |
| Buna, Knob | **0K** |
| Viton, Knob | **VK** |
| Buna, Internal Adjust | **0I** |
| Viton, Internal Adjust | **VI** |
| Buna, Tamper Proof | **0T** |
| Viton, Tamper Proof | **VT** |

**PRESSURE RANGE/SETTING**

**3000** 500-3000 PSI

**Tamper Proof**
Fill in 4 Digit Pressure Setting
Example: 2000 = 2000 PSI

**BODIES**

| | |
|---|---|
| **Blank** | Without Body |
| **S** | #12 SAE Ports |

**WARNING:** *the specifications/application data shown in our catalogs and data sheets are intended only as a general guide for the product described (herein). Any specific application should not be undertaken without independent study, evaluation, and testing for suitability.*



Via Malavolti, 36 - 41122 Modena - ITALY - Phone +39 (059) 254895 - Fax +39 (059) 253512 - mail: tecnord@tecnord.com - **www.tecnord.com**

## SL-PWB SEQUENCE VALVE, NORMALLY CLOSED, INTERNAL PILOT WITH REVERSE FREE FLOW

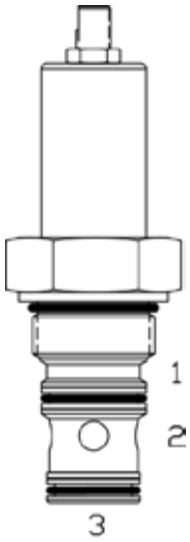


### DESCRIPTION

16 size, 1 5/16-12 thread, “Super” series, internal pilot normally closed, sequence valve w/ reverse free flow.

### OPERATION

The SL-PWB blocks flow from ports (3) to (2). On attainment of a predetermined pressure at (3) the valve shifts to allow flow from (3) to (2). Port (1) should be a tank line. Reverse flow from (2) to (3) occurs when the pressure at port (2) is at least 45 PSI (3.1 bar) higher than at port (3).

### FEATURES

- Hardened parts for long life.
- Industry common cavity.

### HYDRAULIC SYMBOL

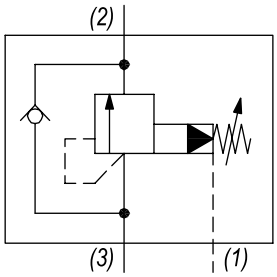


### PERFORMANCE

Actual Test Data (Cartridge Only)

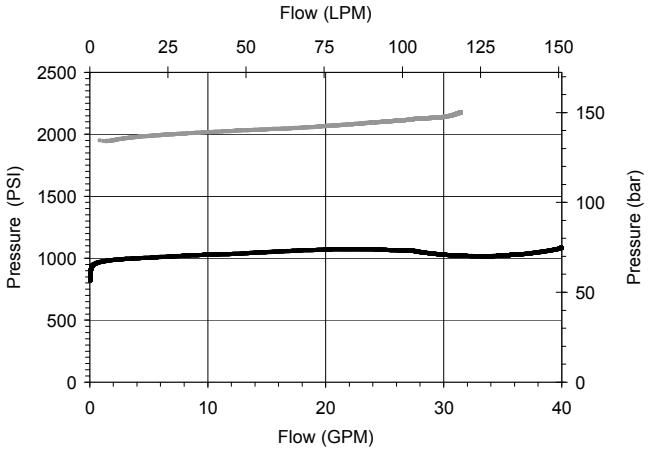


### VALVE SPECIFICATIONS

| | |
|---|---|
| Nominal Flow | 40 GPM (151 LPM) |
| Rated Operating Pressure | 3500 PSI (241 bar) |
| Viscosity Range | 36 to 3000 SSU (3 to 647 cSt) |
| Filtration | ISO 18/16/13 |
| Media Operating Temp. Range | -40° to 250°F (-40° to 120°C) |
| Weight | 1.15 lbs (.52 kg) |
| Operating Fluid Media | General Purpose Hydraulic Fluid |
| Cartridge Torque Requirements | 90 ft-lbs (122 Nm) |
| Cavity | SUPER 3WS |
| Cavity Form Tool (Finishing) | 40500021 |
| Seal Kit | 21191404 |

**WARNING:** *the specifications/application data shown in our catalogs and data sheets are intended only as a general guide for the product described (herein). Any specific application should not be undertaken without independent study, evaluation, and testing for suitability.*



Via Malavolti, 36 - 41122 Modena - ITALY - Phone +39 (059) 254895 - Fax +39 (059) 253512 - mail: tecnord@tecnord.com - **www.tecnord.com**

## DIMENSIONS

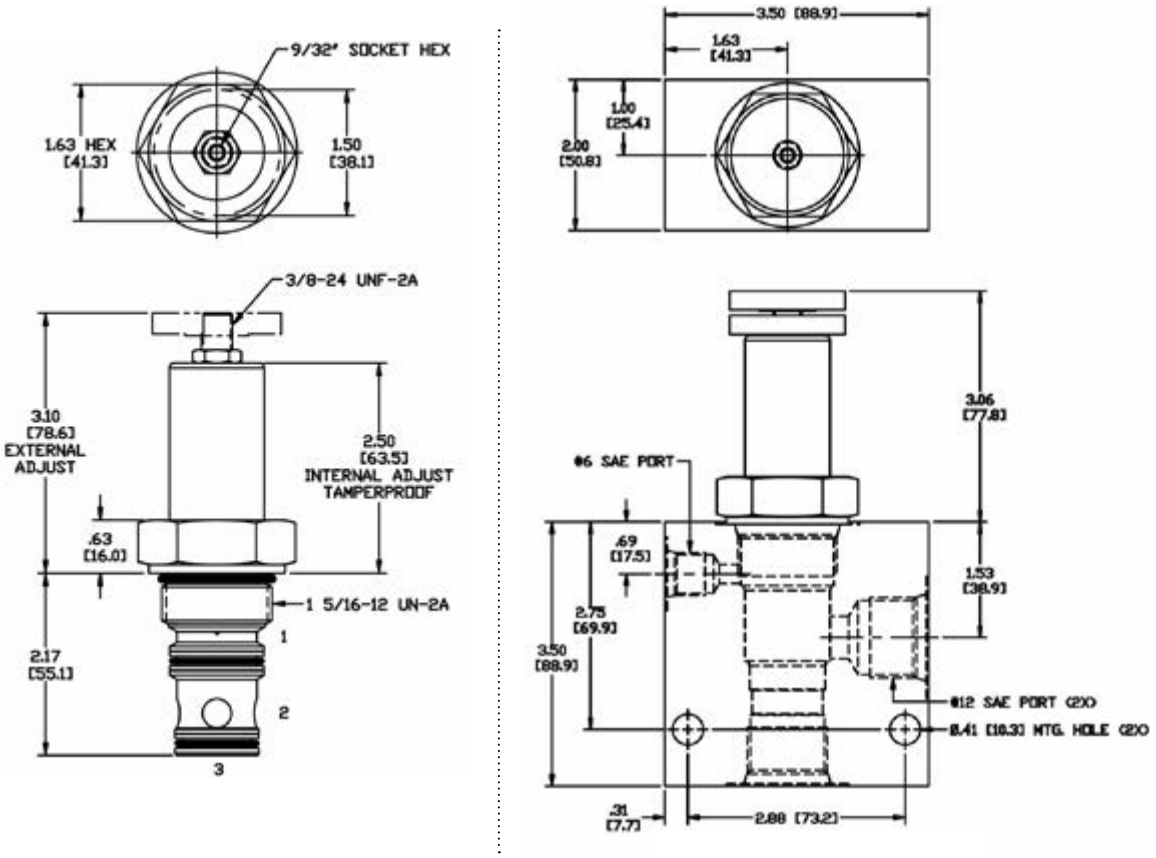


*Body Weight: 1.89 lbs (.86 kg)*

## ORDERING INFORMATION

**SL-PWB – ____ – ____ – ____**

**OPTIONS**

| | |
|---|---|
| Buna Standard | **00** |
| Viton Standard | **V0** |
| Buna, Knob | **0K** |
| Viton, Knob | **VK** |
| Buna, Internal Adjust | **0I** |
| Viton, Internal Adjust | **VI** |
| Buna, Tamper Proof | **0T** |
| Viton, Tamper Proof | **VT** |

**PRESSURE RANGE/SETTING**

| | |
|---|---|
| **3000** | 500-3000 PSI |

**Tamper Proof**
Fill in 4 Digit Pressure Setting
Example: 2000 = 2000 PSI

**BODIES**

| | |
|---|---|
| **Blank** | Without Body |
| **S** | #12 SAE Ports |

**WARNING:** *the specifications/application data shown in our catalogs and data sheets are intended only as a general guide for the product described (herein). Any specific application should not be undertaken without independent study, evaluation, and testing for suitability.*



Via Malavolti, 36 - 41122 Modena - ITALY - Phone +39 (059) 254895 - Fax +39 (059) 253512 - mail: tecnord@tecnord.com - **www.tecnord.com**

**WARNING:** *the specifications/application data shown in our catalogs and data sheets are intended only as a general guide for the product described (herein). Any specific application should not be undertaken without independent study, evaluation, and testing for suitability.*



Via Malavolti, 36 - 41122 Modena - ITALY - Phone +39 (059) 254895 - Fax +39 (059) 253512 - mail: tecnord@tecnord.com - **www.tecnord.com**

## SHUT DOWN VALVES

| | GPM | PSI | LPM | BAR | CAVITY | MODEL | PAGE |
|---|---|---|---|---|---|---|---|
| 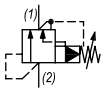 | 15 | 4500 | 57 | 310 | 7/8-14 | **DE-PSD** | MP122 |

## TYPICAL SCHEMATIC

Typical application for the PSD is a system protector, like a relief valve, but once this valve opens it will not reseat until the pressure at port (2) is drained off. This valve is not to be used as a load holding device.

**WARNING:** *the specifications/application data shown in our catalogs and data sheets are intended only as a general guide for the product described (herein). Any specific application should not be undertaken without independent study, evaluation, and testing for suitability.*



Via Malavolti, 36 - 41122 Modena - ITALY - Phone +39 (059) 254895 - Fax +39 (059) 253512 - mail: tecnord@tecnord.com - **www.tecnord.com**

## DE-PSD PRESSURE SHUT DOWN VALVE

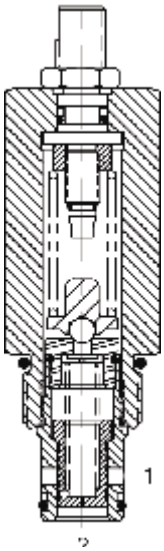


### DESCRIPTION

10 size, 7/8-14 thread, “Delta” series, pressure shut down valve.

### OPERATION

The DE-PSD blocks flow from (2) to (1) until sufficient pressure is present at (2) to open the pilot, thereby forcing the spool to open and allowing flow from (2) to (1). The valve stays open until the differential pressure from (2) to (1) decreases to less than 50 PSI (3.4 bar).

### FEATURES

- Hardened parts for long life.
- Industry common cavity.

### HYDRAULIC SYMBOL

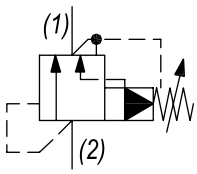


*Usually the valve requires flow to be reduced to near zero before the valve will reset.*

### PERFORMANCE

Actual Test Data (Cartridge Only)

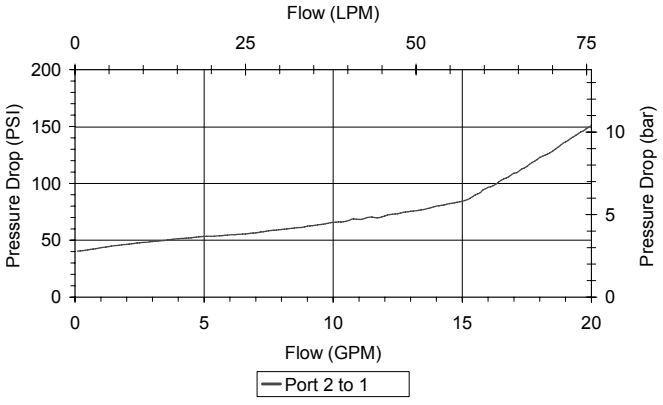


### VALVE SPECIFICATIONS

| | |
|---|---|
| Nominal Flow | 15 GPM (57 LPM) |
| Rated Operating Pressure | 4500 PSI (310 bar) |
| Viscosity Range | 36 to 3000 SSU (3 to 647 cSt) |
| Filtration | ISO 18/16/13 |
| Media Operating Temp. Range | -40° to 250°F (-40° to 120°C) |
| Weight | .53 lbs (.24 kg) |
| Operating Fluid Media | General Purpose Hydraulic Fluid |
| Cartridge Torque Requirements | 30 ft-lbs (40.6 Nm) |
| Cavity | DELTA 2W |
| Cavity Form Tool (Finishing) | 40500000 |
| Seal Kit | 21191200 |

**WARNING:** *the specifications/application data shown in our catalogs and data sheets are intended only as a general guide for the product described (herein). Any specific application should not be undertaken without independent study, evaluation, and testing for suitability.*



Via Malavolti, 36 - 41122 Modena - ITALY - Phone +39 (059) 254895 - Fax +39 (059) 253512 - mail: tecnord@tecnord.com - **www.tecnord.com**

## DIMENSIONS

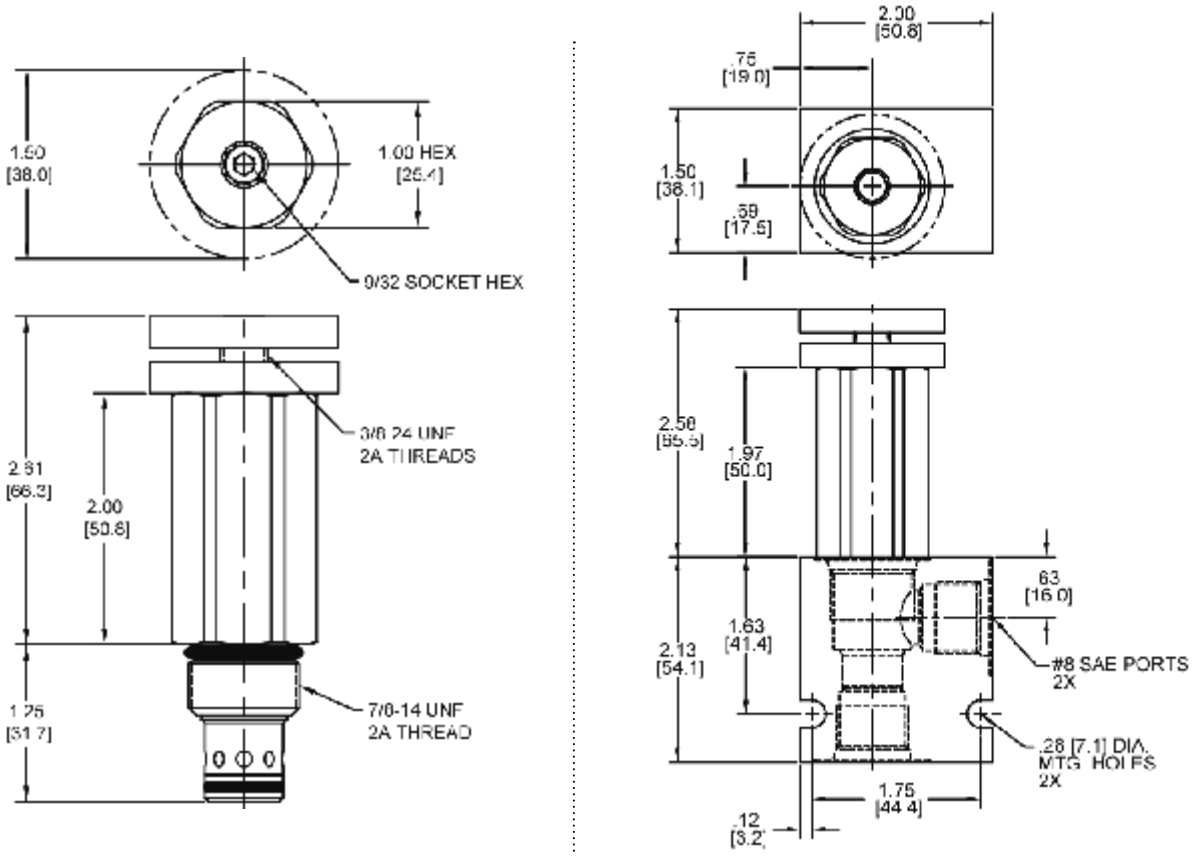


*Body Weight: .47 lbs (.21 kg)*

## ORDERING INFORMATION

**DE-PSD – ____ – ____ – ____**

**OPTIONS**

| | |
|---|---|
| Buna Standard | **00** |
| Viton Standard | **V0** |
| Buna, Knob | **0K** |
| Viton, Knob | **VK** |
| Buna, Internal Adjust | **0I** |
| Viton, Internal Adjust | **VI** |
| Buna, Tamper Proof | **0T** |
| Viton, Tamper Proof | **VT** |

**PRESSURE RANGE/SETTING**

| | |
|---|---|
| **3000** | 100-3000 PSI |
| **4500** | 3000-4500 PSI |

**Tamper Proof**
Fill in 4 Digit Pressure Setting
Example: 0500 = 500 PSI

**BODIES**

| | |
|---|---|
| **Blank** | Without Body |
| **N** | 3/8" NPTF Ports |
| **S** | #8 SAE Ports |

**Note: aluminum NOT durability rated for 4000 PSI. Consult factory for options.**

**WARNING:** *the specifications/application data shown in our catalogs and data sheets are intended only as a general guide for the product described (herein). Any specific application should not be undertaken without independent study, evaluation, and testing for suitability.*



Via Malavolti, 36 - 41122 Modena - ITALY - Phone +39 (059) 254895 - Fax +39 (059) 253512 - mail: tecnord@tecnord.com - **www.tecnord.com**