TRANSMISSION AND PILOT CONTROL VALVES

SLIP-IN CONFIGURATION

STD CAVITY RANGE
Proportional Pressure Reducing-Relieving Valves Direct Acting

MID RANGE
Proportional Pressure Reducing-Relieving Valves Direct Acting
High Performance Design

HIGH RANGE
Proportional Pressure Reducing & ON-OFF Valves Pilot Operated

TECNORD

DESCRIPTION

Proportional Pressure Reducing Valves are used to generate a variable pressure in response to a PWM (Pulse Width Modulated) current signal.

PRINCIPLE OF OPERATION

QUICK FILL-UP: a high current peak fed to the proportional solenoid of the PPRV, generates a quick shifting of the valve spool to fill up the gap between clutch discs in the shortest possible time. Clutch discs enter in touch with each other to begin to transfer torque and speed (= power) from the INPUT to the OUTPUT shaft.

SOFT ENGAGEMENT: the PWM current signal is quickly reduced to a minimum value in order to let pressure start from the "kiss point" (2 bar) and then ramp up smoothly to a "high end" (16-18 bar) during which the torque is gradually transmitted to the driven shaft.

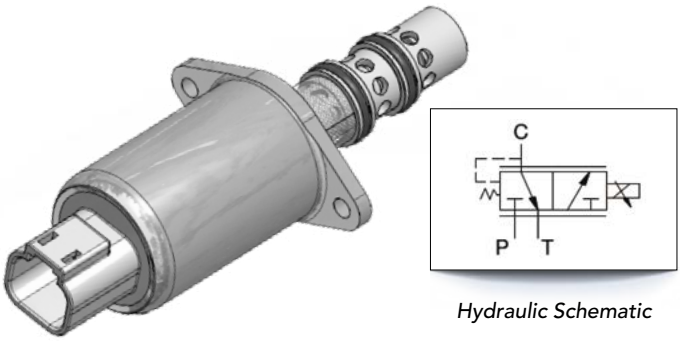

Hydraulic Schematic

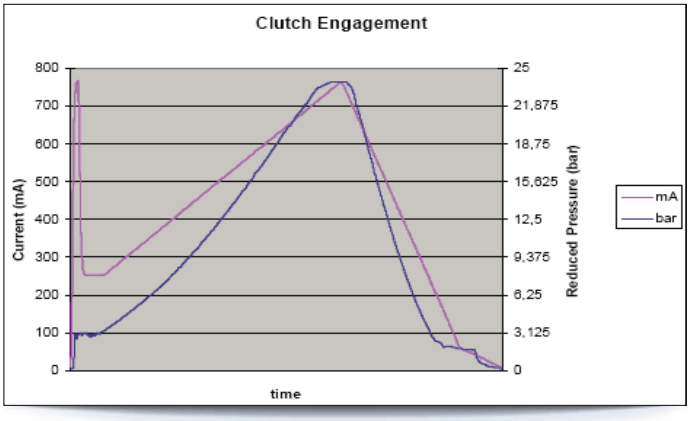

Typical clutch cycle

- Preliminary "quick fill-up" phase at top current until pressure begins to raise within the clutch piston chamber.
- Modulated current ramp to generate a "soft engagement" of clutch discs.

WET DISC CLUTCH SECTIONAL VIEW

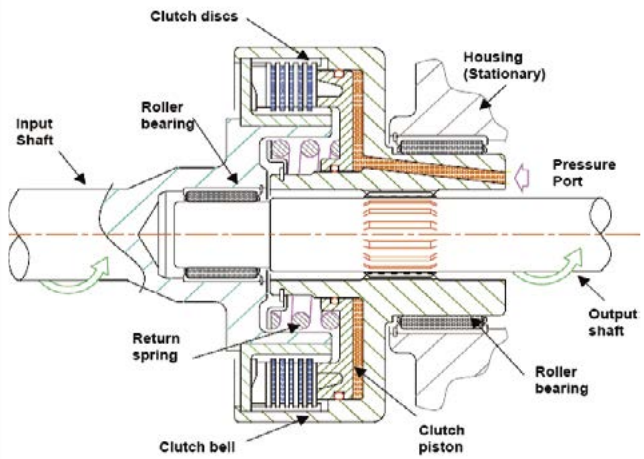

TYPICAL LAYOUT OF POWERTRAIN CONTROL HYDRAULICS FOR AGRICULTURAL TRACTORS

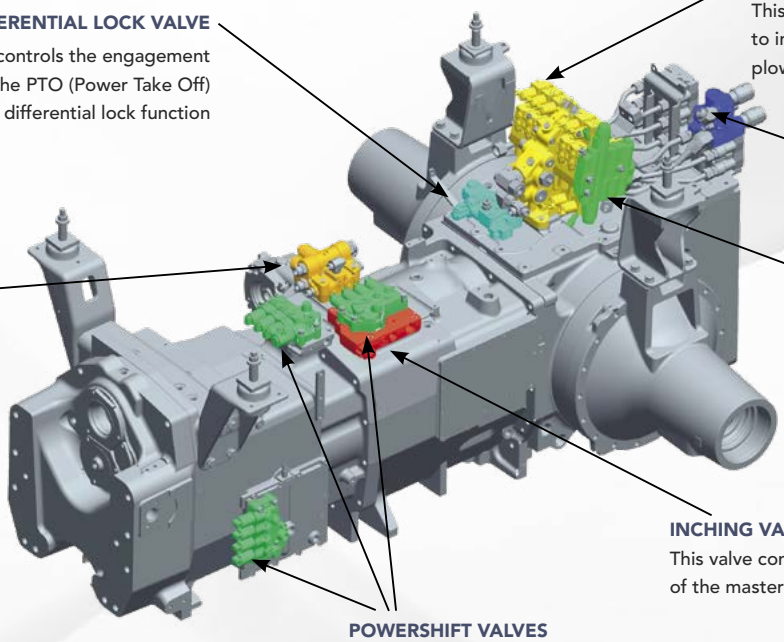

PTO / DIFFERENTIAL LOCK VALVE
This valve controls the engagement of the PTO (Power Take Off) and the differential lock function

AUXILIARY VALVES
This valve supplies hydraulic power to implements such as planters, sprayers, plows, bailers, etc

POWER BEYOND VALVE
This valve provides an additional source of hydraulic power on the tractor

PRIORITY / REGULATOR VALVE
This valve makes sure steering always gets priority over all other hydraulic functions.
The other half of the valve maintains regulated pilot pressure at 345 PSI

HITCH VALVE
This valve controls the raising and lowering of the 3-point hitch

INCHING VALVE
This valve controls the engagement of the master clutch

POWERSHIFT VALVES
There are three of these on each tractor. They control the shifting of each clutch through the 18, 19 or 21 speeds

FUNCTION	IP-DAR-250	IP-DAR-043	IP-RDS-216/222	IP-PRZ-059
Proportional Pressure Reducing Valves are designed to generate a variable pressure in response to a PWM (Pulse Width Modulated) Current Input signal *Hydraulic Symbol* 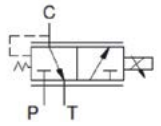	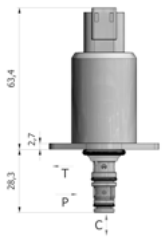	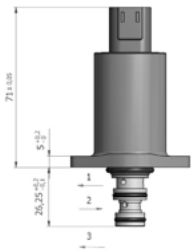	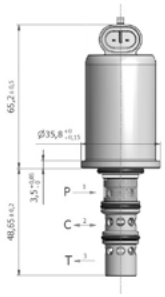	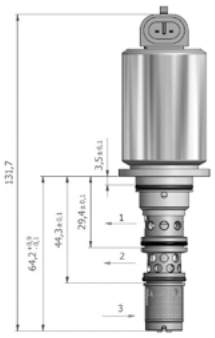

Configuration	*STD CAVITY Slip-in Direct acting*	*STD CAVITY Slip-in Direct acting*	*MID-RANGE Slip-in Direct Acting High Performance*	*HIGH-RANGE Slip-in Pilot Operated*
Pressure Control Range	0-20 bar (std) / 0-25 bar (std) 0-32 bar (std)	0-20 bar (std) / 0-25 bar (std) 0-32 bar (std)	0-30 bar (std) / 0-45 bar (opt) 0-60 bar (opt)	0-30 bar
Nominal Flow Rate (Press Drop <4 bar)	4 lpm	4 lpm	30 lpm	35 lpm
Leakage at rest	15 cc/min	15 cc/min	15 cc/min	450 cc/min
PWM Current Control Range @ 12 VDC	300-1400 mA	300-1400 mA	300-1200 mA	100-750 mA
Ohmic Resistance @ 12 VDC	4.8 Ohm	5.4 Ohm	5.4 Ohm	9.9 Ohm
Coil Termination	Amp Junior Timer Deutsch DT04	Amp Junior Timer Deutsch DT04	Metripack MP 150 Deutsch DT04	Metripack MP 150

APPLICATIONS

- Micro Microprocessor-controlled Powershift transmissions for off-highway equipment and agricoltural tractors
- CVT transmissions (Continuosly Variable Transmission)
- DCT transmissions (Dual Clutch Transmission)
- Anti-Block and Anti-Slip traction systems
- Hi-Lo transmission stages
- Marine inverters

REFERENCES

CNH AG Worldwide, **CNH CE** Worldwide, **JOHN DEERE TRACTORS** USA, **CARRARO TRANSMISSIONS** Worldwide, **ZF** Germany - Italy, **LUK** Germany, **OERLIKON GRAZIANO** Italy, **CONTINENTAL HYDRAULICS** USA, **HY-PRO HYDRAULICS** USA, **FUJI UNIVANCE** Japan, **XUANGONG** China, **TURK TRACTOR** Turkey, **TÜMOSAN** Turkey, **SAI HYDRAULIC MOTORS** Italy, **HEMA INDUSTRIES** Turkey, **LOVOL ARBOS GROUP** China, **HIDROMEK** Turkey

NEW HOLLAND T8 SERIES

CASE IH MAXXUM

STEIGER & QUADTRACK SERIES

JD DF5000 TRANSMISSION

IP-DAR-250

Hydraulic Specifications

Configuration ..... Direct acting / Slip-in type
Max. Input Pressure ..... 50 bar (Std)
Max. Output Flow ..... 4 lt/min @ 6 bar Delta-P
Control Pressure Range ..... See Graph
Typical Internal Leakage at Rest ..... 15 cc/min
Max. Back Pressure at T Port ..... 50 bar
Media Operating Temp. Range ..... -30°C / +115°C
Oil Viscosity Range ..... 3 cSt / 400 cSt
Max. Contamination Level ..... 18/15 (ISO 4406)
Cavity Tool ..... TCN T250

Electrical Specifications

Coil Resistance ..... 4.8 Ohm (12 VDC)
20 Ohm (24 VDC)
Current Supply Characteristics ..... PWM (See Graph)
Superimposed Dither Frequency ..... 100 / 150 Hz
Coil Terminations ..... Amp Junior Timer
Deutsch DT04
Environmental Protection Rating ..... up to IP69K
Duty Cycle ..... 100% EDI

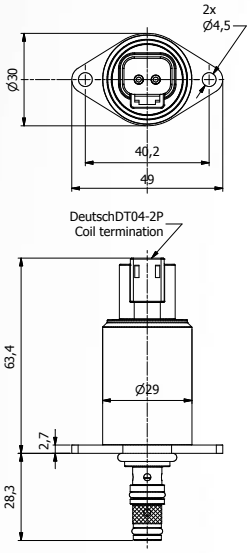

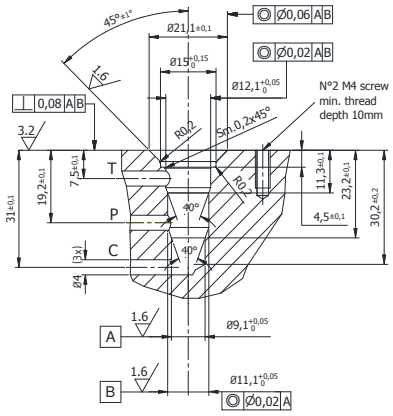

Cavity T250

Deutsch DT04 Connector

29MM OD

AMP Junior Timer Connector

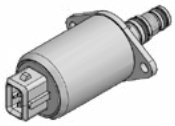

Pressure (bar) vs. Current (mA) Characteristic
12 VDC coil / 4.8 Ohm / 46cSt @ 45°C / PWM100hz

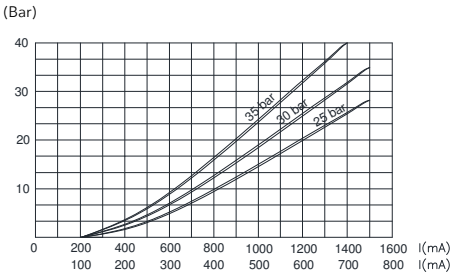

Hydraulic Schematic

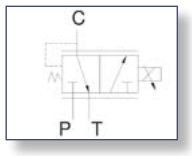

IP-DAR-043

Hydraulic Specifications

Configuration ..... Direct acting / Slip-in type
Max. Input Pressure ..... 50 bar (Std) / 350 bar (Opt)
Max. Output Flow ..... 4 lt/min @ 6 bar Delta-P
Control Pressure Range ..... See Graph
Typical Internal Leakage at Rest ..... 15 cc/min
Max. Back Pressure at T Port ..... 50 bar
Media Operating Temp. Range ..... -30°C / +115°C
Oil Viscosity Range ..... 3 cSt / 400 cSt
Max. Contamination Level ..... 18/15 (ISO 4406)
Cavity Tool ..... TCN T043

Electrical Specifications

Coil Resistance ..... 5.4 Ohm (12 VDC)
22 Ohm (24 VDC)
Current Supply Characteristics ..... PWM (See Graph)
Superimposed Dither Frequency ..... 100 / 150 Hz
Coil Terminations ..... Amp Junior Timer
Deutsch DT04
Environmental Protection Rating ..... up to IP69K
Duty Cycle ..... 100% EDI

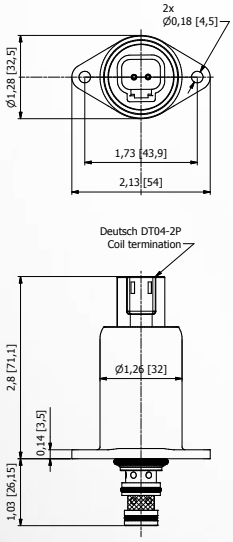

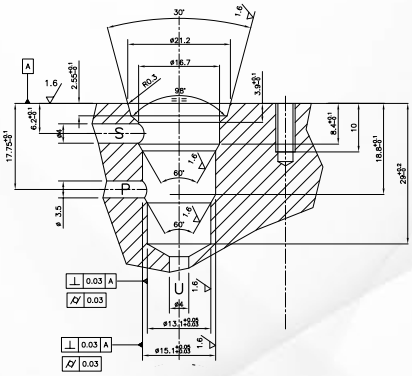

Cavity T043

Deutsch DT04 Connector

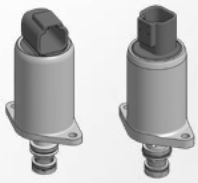

32MM OD

AMP Junior Timer Connector

Pressure (bar) vs. Current (mA) Characteristic
12 VDC coil / 5.4 Ohm / 46cSt @ 45°C / PWM100hz

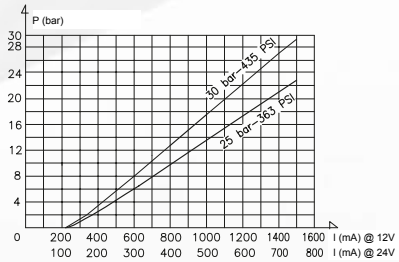

Hydraulic Schematic

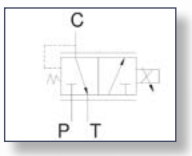

IP-RDS-216/222

Hydraulic Specifications

Configuration	Direct acting High Performance
Max. Input Pressure	60 bar
Max. Output Flow	30 lt/min @ 4 bar Delta-P
Control Pressure Range	See Graph
Typical Internal Leakage at Rest	15 cc/min
Max. Back Pressure at T Port	25 bar (Std)
Media Operating Temp. Range	-30°C / +115°C
Oil Viscosity Range	3 cSt / 647 cSt
Max. Contamination Level	18/15 (ISO 4406)
Cavity Tool	TCN T216 / T222

Electrical Specifications

Coil Resistance	5.4 Ohm (12 VDC) 12.8 Ohm (24 VDC)
Current Supply Characteristics	PWM (See Graph)
Superimposed Dither Frequency	100 / 150 Hz
Coil Terminations	Deutsch DT04 Metripack MP 150
Environmental Protection Rating	IP69K
Duty Cycle	100% EDI

Deutsch DT04 Connector
Cavity T222

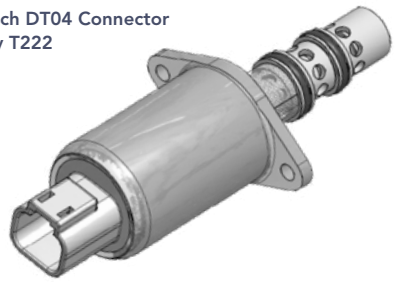

Metripack MP 150 Connector
Cavity T216

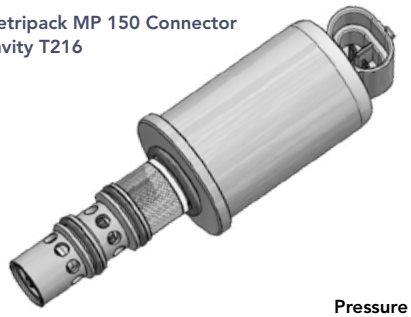

Hydraulic Schematic

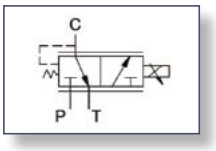

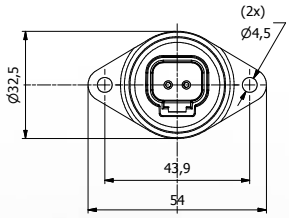

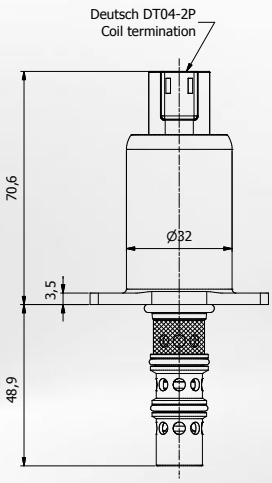

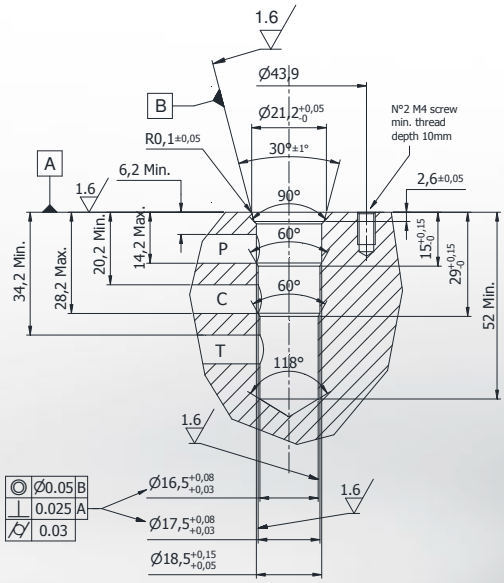

Cavity T222

Pressure (bar) vs. Current (mA) Characteristic
12 VDC coil / 5.4 Ohm / 46cSt @ 45°C / PWM100hz

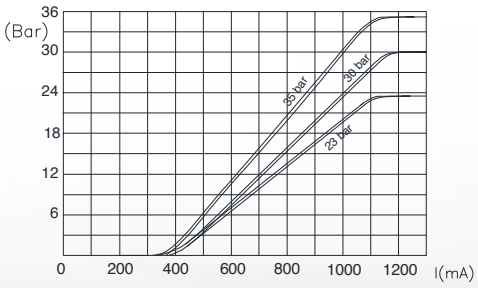

Pressure Drop
46cSt @ 45°C

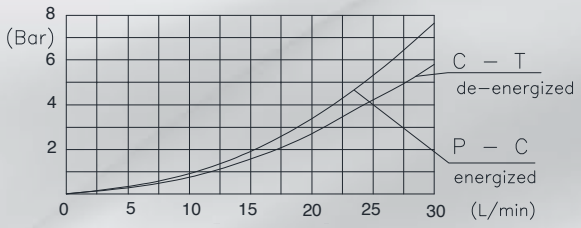

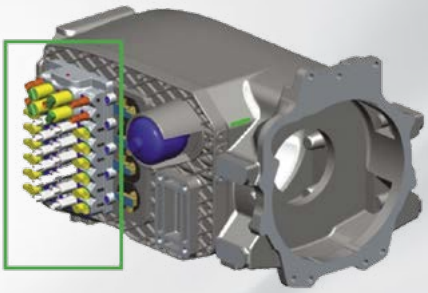

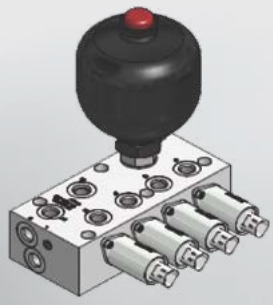

IP-PRZ-59

Hydraulic Specifications

Configuration ..... Pilot Operated
Max. Input Pressure ..... 50 bar
Max. Output Flow ..... 40 lt/min @ 4 bar Delta-P
Control Pressure Range ..... See Graph
Typical Internal Leakage at Rest ..... 450 cc/min
Max. Back Pressure at T Port ..... 25 bar (Std) / 350 bar (Opt)
Media Operating Temp. Range ..... -30°C / +115°C
Oil Viscosity Range ..... 3 cSt / 647 cSt
Max Contamination Level ..... 18/15 (ISO 4406)
Cavity Tool ..... TCN T059

Electrical Specifications

Coil Resistance ..... 9.9 Ohm (12 VDC)
Current Supply Characteristics ..... PWM (See Graph)
Superimposed Dither Frequency ..... 120 Hz ±15%
Coil Terminations ..... Packard MP150 (Amp Superseal Compatible)
Environmental Protection Rating IP69K
Duty Cycle ..... 100% EDI

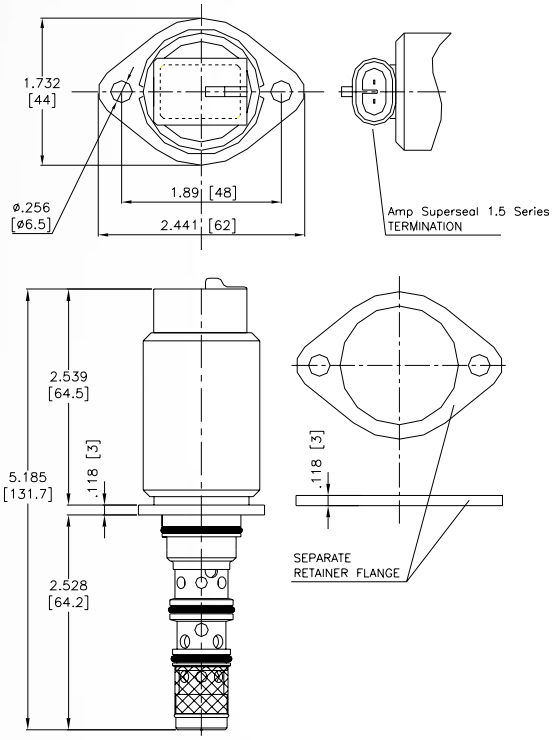

Hydraulic Schematic

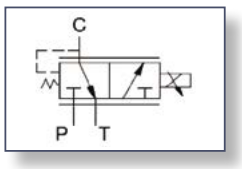

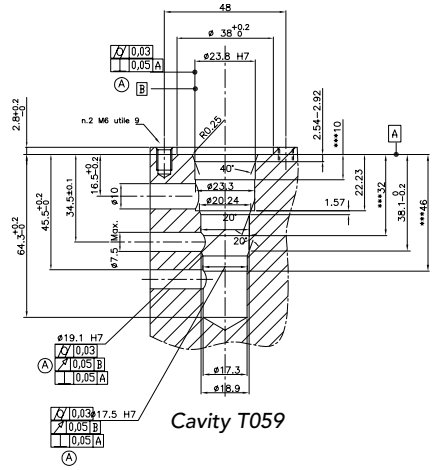

Pressure (bar) vs. Current (mA) Characteristic
12 VDC coil / 9.9 Ohm / 46cSt @ 45°C / PWM100hz

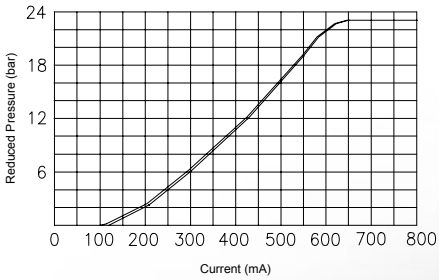

HIGH RANGE ON-OFF Directional Control Valves

IE-S2H-056

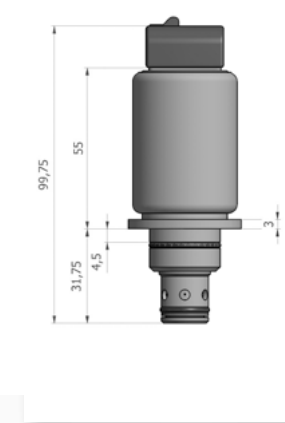

IF-S3A-057

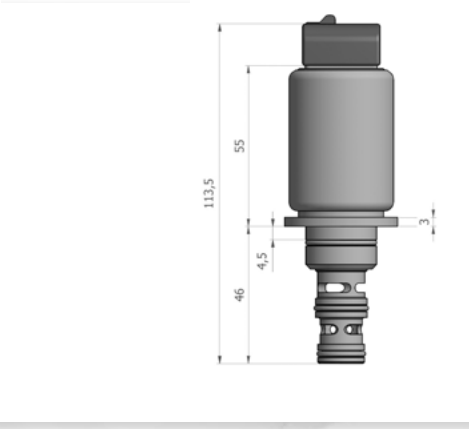

IG-S4A-058

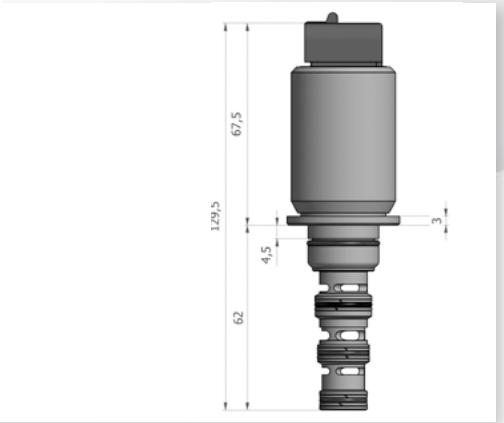

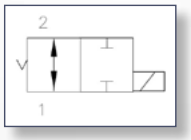

2way-2pos

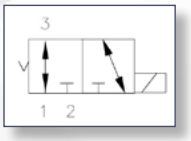

3way-2pos

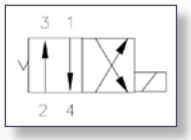

4way-2pos / Criss-Cross

TECNORD

COMPREHENSIVE RANGE OF REMOTE CONTROL ELECTRONICS

EC-PWM-A1-MPC1

Microprocessor - based PWM electronic drivers

FINGERTIP PROPORTIONAL LEVERS

Potentiometric and hall effect single-axis control levers and roller switches

ERGONOMIC GRIPS

Multi-function ergonomic grips with on-off and proportional switches

HEAVY DUTY JOYSTICKS

Potentiometric and hall effect multi-axes control joysticks

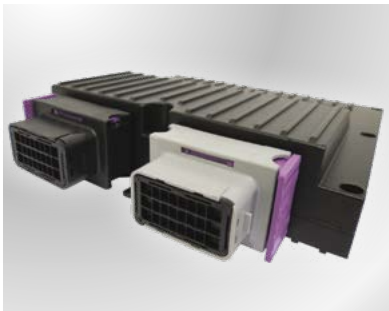

MACHINE MANAGEMENT SYSTEMS

Microprocessor-based MMS for the integrated control of electro-hydraulic and safety functions

ECOMATIC

GPS ground-speed oriented salt spreader control systems

4/6 FUNCTIONS SHW RADIO

Combined on-off and proportional radio control system with single hand wander

4/6 FUNCTIONS PTM RADIO

Multi-function proportional radio control with shoulder-strap transmitter and CANbus receiver

ARM-REST CONTROLLER

Arm-rest control unit for hedge cutter

SEPTEMBER 2022

TECNORD

Via Malavolti, 36 · 41122 Modena · ITALY · Phone +39 (059) 254895 · Fax +39 (059) 253512 · mail: tecnord@tecnord.com · **www.tecnord.com**