DG-S4M DIRECT ACTING SPOOL, 4 WAY 3 POSITION, MOTOR CENTER

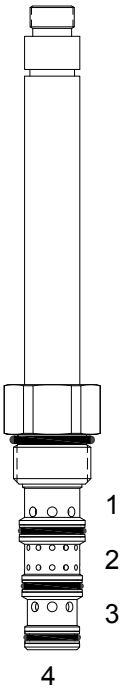

DESCRIPTION

10 size, 7/8-14 thread, “Delta” series, solenoid operated, 4 way 3 position, motor center spool valve.

OPERATION

When de-energized the DG-S4M block the flow at (2) and allows flow between (1), (3) and (4). When outer coil (S1) is energized the valve allows flow from (2) to (1) and from (3) to (4). When inner coil (S2) is energized the valve allows flow from (2) to (3) and from (1) to (4).

OPERATION OF MANUAL OVERRIDE OPTION: Bidirectional Override - Spring biased in neutral center position, when pushed the valve shifts in the (S2) direction, when pulled the valve shifts in the S1 direction.

Push Only Override - Spring biased in neutral center position, when pushed the valve shifts in the (S2) direction.

FEATURES

- Hardened parts for long life.
- Efficient wet-armature construction.
- Cartridges are voltage interchangeable.
- Manual override option.
- Industry common cavity.
- Unitized, molded coil design.
- Continuous duty rated solenoid.
- Optional coil voltages and terminations.
- Optional “I” Coil: Weatherproof, Thermal Shock, Immersion Safe.

Uses “L” Coil. Flow rating is at 1000 PSID maximum differential loading.

PERFORMANCE

Actual Test Data (Cartridge Only)

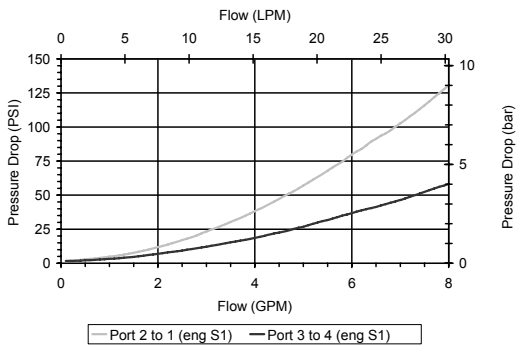

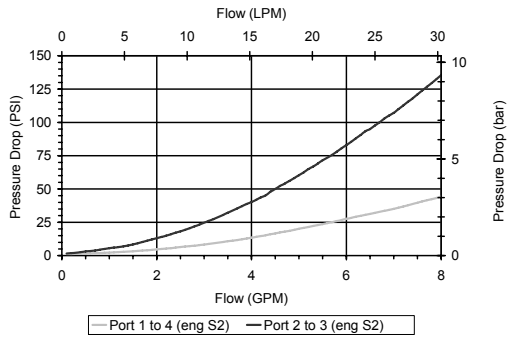

HYDRAULIC SYMBOL

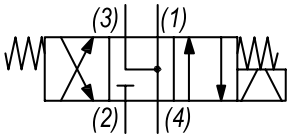

VALVE SPECIFICATIONS

Nominal Flow	6.5 GPM (25 LPM)
Rated Operating Pressure	3000 PSI (207 bar)
Typical Internal Leakage (150 SSU)	5 cu in/min (82 ml/min) per path
Viscosity Range	36 to 3000 SSU (3 to 647 cSt)
Filtration	ISO 18/16/13
Media Operating Temp. Range	-40° to 250°F (-40° to 120°C)
Weight	.51 lbs (.23 kg)
Operating Fluid Media	General Purpose Hydraulic Fluid
Cartridge Torque Requirements	30 ft-lbs (40.6 Nm)
Coil Nut Torque Requirements	4-6 ft-lbs (5.4-8.1 Nm)
Cavity	DELTA 4W
Cavity Tools Kit (form tool, reamer, tap)	40500002
Seal Kit	21191214

WARNING: *the specifications/application data shown in our catalogs and data sheets are intended only as a general guide for the product described (herein). Any specific application should not be undertaken without independent study, evaluation, and testing for suitability.*

Via Malavolti, 36 - 41122 Modena - ITALY - Phone +39 (059) 254895 - Fax +39 (059) 253512 - mail: tecnord@tecnord.com - **www.tecnord.com**

DIMENSIONS

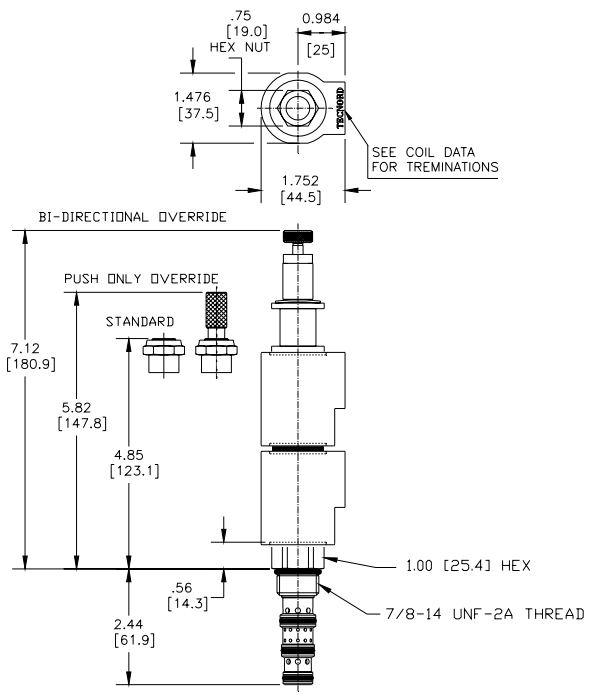

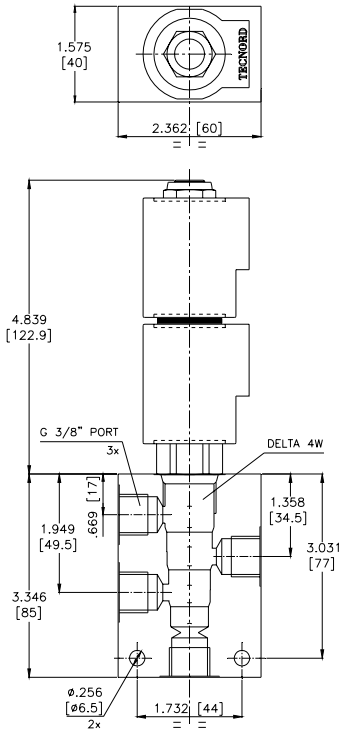

ORDERING INFORMATION

Approximate Coil Weight: .68 lbs (.31 kg)

DG-S4M – _____ – _____ – _____ – _____

OPTIONS

Buna Standard	**00**
Viton Standard	**V0**
Buna, Override, Detent	**0M**
Viton, Override, Detent	**VM**
Buna, Push Only Override	**0P**
Viton, Push Only Override	**VP**

BODIES

Blank	Without Body
N	3/8" BSP Ports
S	#6 SAE Ports

VOLTAGE *(other voltages available on request)*

12	12 VDC
24	24 VDC
22	220 VAC without internal rectifier

"L" COIL TERMINATION
(All DC Except as Noted)

DL Double Lead
(several types of termination can be attached on leads on request)

HC DIN 43650 (Hirschmann) - (AC&DC)
DI Deutsch - Integral DT04-2P

IMMERSION PROOF "L" TYPE

LIA	"I" Coil AMP Superseal - Integral
LID	"I" Coil Deutsch - Integral DT04-2P
LIJ	"I" Coil AMP Jr. Timer - Integral
LIM	"I" Coil Metri-Pack - Integral

WARNING: *the specifications/application data shown in our catalogs and data sheets are intended only as a general guide for the product described (herein). Any specific application should not be undertaken without independent study, evaluation, and testing for suitability.*

Via Malavolti, 36 - 41122 Modena - ITALY - Phone +39 (059) 254895 - Fax +39 (059) 253512 - mail: tecnord@tecnord.com - **www.tecnord.com**