PQ-S4B DIRECT ACTING SPOOL, 4 WAY 2 POSITION, CLOSED CENTER

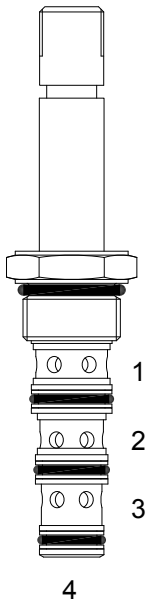

DESCRIPTION

8 size, 3/4 -16 thread, “Power” series, solenoid operated, 4 way 2 position, closed center spool valve.

OPERATION

When de-energized the PQ-S4B blocks flow at all ports. When energized the valve allows flow from (2) to (1) and from (3) to (4).

OPERATION OF MANUAL OVERRIDE OPTION: to override, pull knob out. On the detented version, after pulling knob out twist 180 degrees and release. The valve will remain in that position.

FEATURES

- Hardened parts for long life.
- Efficient wet-armature construction.
- Cartridges are voltage interchangeable.
- Manual override option.
- Industry common cavity.
- Unitized, molded coil design.
- Continuous duty rated solenoid.
- Optional coil voltages and terminations.
- Optional “I” Coil: Weatherproof, Thermal Shock, Immersion Safe.

HYDRAULIC SYMBOL

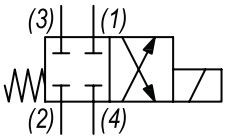

Modes of shift operation to 6 GPM, Consult Factory.

PERFORMANCE

Actual Test Data (Cartridge Only)

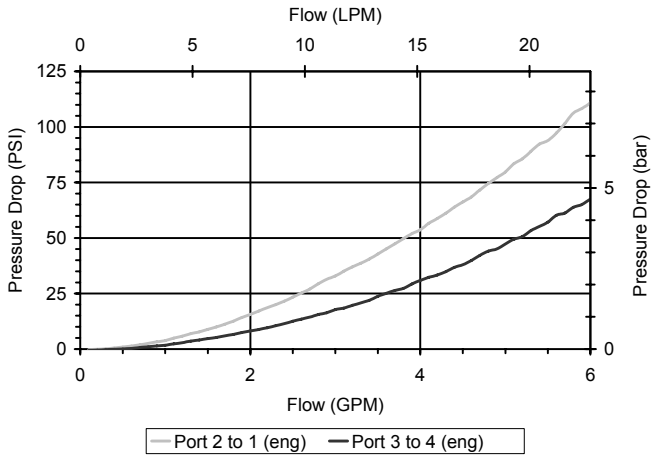

VALVE SPECIFICATIONS

Nominal Flow	4 GPM (15 LPM)
Rated Operating Pressure	3000 PSI (207 bar)
Typical Internal Leakage (150 SSU)	5 cu in/min (82 ml/min)
Viscosity Range	36 to 3000 SSU (3 to 647 cSt)
Filtration	ISO 18/16/13
Media Operating Temp. Range	-40° to 250°F (-40° to 120°C)
Weight	.24 lbs (.11 kg)
Operating Fluid Media	General Purpose Hydraulic Fluid
Cartridge Torque Requirements	25 ft-lbs (34 Nm)
Coil Nut Torque Requirements	4-6 ft-lbs (5.4-8.1 Nm)
Cavity	POWER 4W
Cavity Tools Kit (form tool, reamer, tap)	40500029
Seal Kit	21191108

WARNING: *the specifications/application data shown in our catalogs and data sheets are intended only as a general guide for the product described (herein). Any specific application should not be undertaken without independent study, evaluation, and testing for suitability.*

Via Malavolti, 36 - 41122 Modena - ITALY - Phone +39 (059) 254895 - Fax +39 (059) 253512 - mail: tecnord@tecnord.com - **www.tecnord.com**

DIMENSIONS

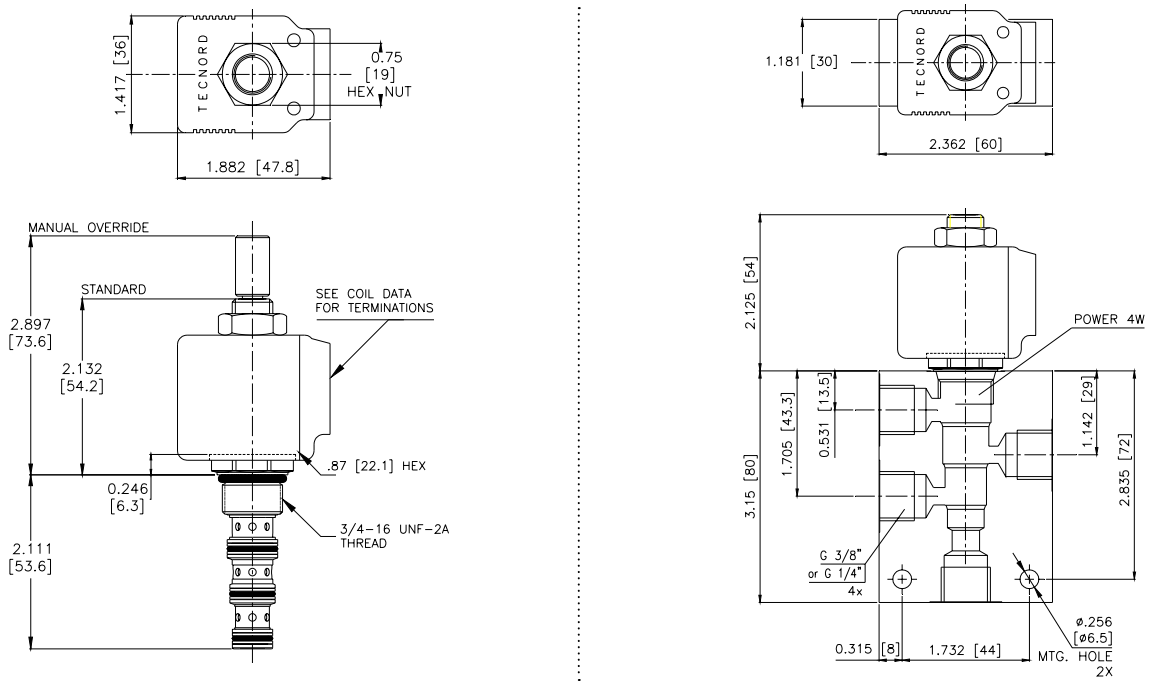

ORDERING INFORMATION

Approximate Coil Weight: .42 lbs (.19 kg)

PQ-S4B – _____ – _____ – _____ – _____

OPTIONS

Buna Standard	**00**
Viton Standard	**V0**
Buna, Override, Detent	**0M**
Viton, Override, Detent	**VM**
Buna, Override, Non-Detent	**B1**
Viton, Override, Non-Detent	**V1**

BODIES

Blank	Without Body
N	1/4" BSP Ports
N1	3/8" BSP Ports
S	#6 SAE Ports

VOLTAGE *(other voltages available on request)*

12	12 VDC
24	24 VDC
22	220 VAC without internal rectifier

"P" TYPE "J" COIL TERMINATION

JA	"J" Coil AMP Superseal - Integral	**JJ**	"J" Coil AMP Jr. Time - Integral	**JL**	"J" Coil Double Lead
JD	"J" Coil Deutsch - Integral DT04-2P			**JH**	"J" Coil DIN 43650 (Hirschmann)

WARNING: *the specifications/application data shown in our catalogs and data sheets are intended only as a general guide for the product described (herein). Any specific application should not be undertaken without independent study, evaluation, and testing for suitability.*

Via Malavolti, 36 - 41122 Modena - ITALY - Phone +39 (059) 254895 - Fax +39 (059) 253512 - mail: tecnord@tecnord.com - **www.tecnord.com**